A TEREX BRAND

Parts Manual

Serial Number Range

S-80 XC
S-85 XC
S-80 HF
S-85 HF

from S80XCH-3101

from S85XCH-3091

Part No. 1314491GT
Rev: A.03
June 2024

Technical Publications

Genie has endeavored to deliver the highest degree of accuracy possible. However, continuous improvement of our products is a Genie policy. Therefore, product specifications are subject to change without notice.

Readers are encouraged to notify Genie of errors and send in suggestions for improvement. All communications will be carefully considered for future printings of this and all other manuals.

Contact Us:

Internet: www.genielift.com
e-mail: awp.techpub@terex.com

Find a Manual for this Model

Go to http://www.genielift.com

Use the links to locate Operator's, Parts, Maintenance, and Service and Repair Manuals.

Copyright © 2022 Terex Corporation

1314491GT Rev A.03 June 2024
First Edition, First Printing

Genie and "S" are registered trademarks of Terex South Dakota, Inc. in the USA and many other countries.
"XC" is a trademark of Terex South Dakota, Inc.
Printed on recycled paper

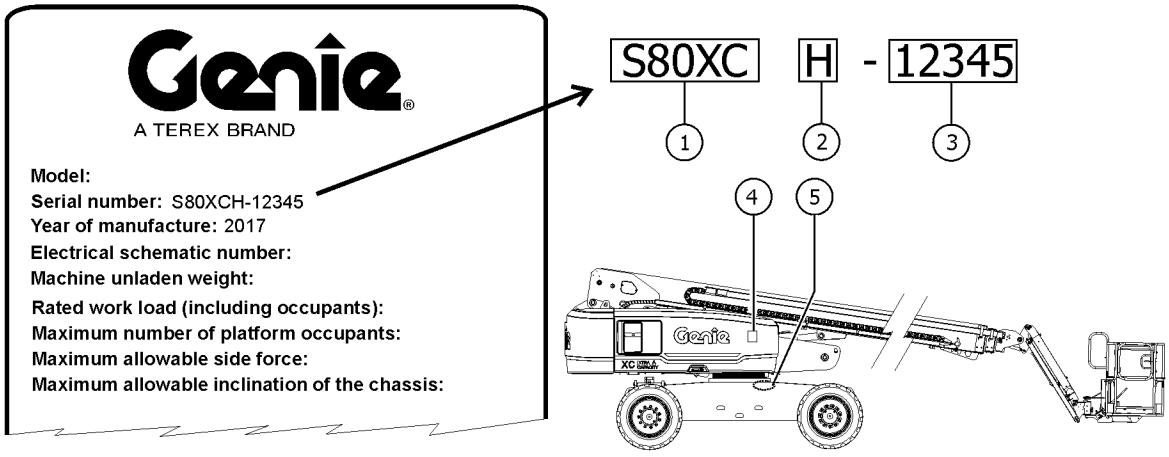

1 Model
2 Facility code
3 Sequence number
4 Serial label (located under cover)
5 Serial number (stamped on chassis)

How to Order Parts

Please be prepared with the following information when ordering replacement parts for your Terex or Genie product.

- ☒ **Machine model number**
- ☒ **Machine serial number**
- ☒ **Part number**
- ☒ **Part description and quantity**
- ☒ **Purchase order number**
- ☒ **"Ship to" address**
- ☒ **Desired method of shipment**
- ☒ **Name and telephone number of the authorized distributor in your area**

Use the Service Parts Fax Order Form on the next page and fax your order to our Parts Department.

If you don't know the name of your authorized distributor, or if your area is not currently serviced by an authorized distributor, please call Terex or Genie Industries.

Machine Information

_____

Model

_____

Serial Number

_____

Date of Purchase

_____

Authorized Genie Distributor

_____

Phone Number

North America

Telephone (425)881-1800

Toll Free (800)536-1800 in US and Canada

Fax (425)556-8659

Toll Free fax (888)274-6192

Email AWP.PartsSalesPO@terex.com

http://genielift.com/en

EMEAR (Europe, Middle East, Africa and Russia)

Telephone (31)(165)519 313

Fax (31)(165)511 148

http://genielift.co.uk

Asia Pacific (Genie Singapore)

Telephone +65 6692 7777

Fax +65 6261 8893

http://genielift.com.sg/

Australia

Telephone (61)(7)3456 4444

Fax (61)(7)3456 4466

http://genielift.com.au

South America

Telephone (55)(11)4082 5600

Fax (55)(11)4082 5630

Please refer to section 001 for the Recommended Spare Parts List.

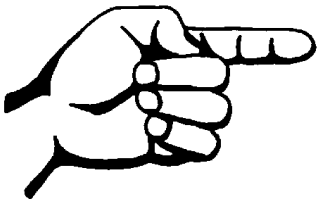

This page intentionally left blank.

TEREX CORPORATION

Service Parts Fax Order Form

Fax to: (425) 556-8659 or Toll Free: 888-274-6192
International: +1-425-556-8659

Please fill out completely

Date _____ Account Number _____

Your Name _____ Your Fax Number _____

_____ Your Phone Number _____

Bill To _____ Ship To _____

_____ _____

_____ _____

_____ _____

Purchase Order Number _____ Ship Via _____

Model(s) _____ **Serial No.(s)** _____

Optional Equipment _____

Part Number	Description	Quantity	Price

All back-ordered parts will be shipped when available via the same ship method as the original order unless Noted below:

- ☐ Ship complete order only - No back orders
- ☐ Ship all available parts and contact customer on disposition of back-ordered parts
- ☐ Other (please specify)

Description — Page

001 Parts Stocking List 12

001.1 Parts Stocking List 12

100 Decals 16

101.1 Decals with Words, Hydraulic Tank Side, S-80 XC 16
101.2 Decals with Words, Hydraulic Tank Side, S-85 XC 20
102.1 Decals with Words, Chassis, S-80 XC 24
102.2 Decals with Words, Chassis, S-85 XC 26
103.1 Decals with Words, Engine Side 28
104.1 Decals with Words, Boom S-80 XC 30
105.1 Decals with Words, Boom S-85 XC 32
106.1 Decals with Words, Platform, S-80 XC 34
106.2 Decals with Words, Platform, S-85 XC 38
107.1 Decals with Symbols, Hydraulic Tank Side, S-80 XC 42
107.2 Decals with Symbols, Hydraulic Tank Side, S-85 XC 46
108.1 Decals with Symbols, Chassis, S-80 XC 50
108.2 Decals with Symbols, Chassis, S-85 XC 52
109.1 Decals with Symbols, Engine Side 54
110.1 Decals with Symbols, Boom S-80 XC 56
111.1 Decals with Symbols, Boom S-85 XC 58
112.1 Decals with Symbols, Platform, S-80 XC 60
112.2 Decals with Symbols, Platform, S-85 XC 62

200 Drive Chassis Components 64

201.1 Steer End 64
202.1 Axle Installation 68
203.1 Oscillation Control Valve 72
204.1 Drive Hub Assembly with Brake 74

300 Turntable Components 76

301.1 Hydraulic and Fuel Tanks - Diesel Models 76
302.1 Hydraulic and Fuel Tanks - Gasoline/LPG Models 80
303.1 Hydraulic Tank Side Components 84
304.1 Turntable Covers - Hydraulic Tank Side 90
305.1 Turntable Covers - Engine Side 94
306.1 Turntable Components and Swivel Drive Assembly 98
307.1 Turntable Center Components 104
308.1 Ground Control Box - View 1, S-80 XC 106
308.2 Ground Control Box - View 1, S-85 XC 108
309.1 Ground Control Box - View 2 110
310.1 Turntable Counterweight, S-80 XC 114

Description	Page
310.2 Turntable Counterweight, S-85 XC	116
311.1 Wire Harness Diagram, S-80 XC	118
311.101 Cable, Boom, Composite, S80XC	122
311.102 Harness Gbox ALC600, Telematic 2, HW	124
311.102A Harness Gbox ALC600, Telematics 2.0	128
311.102B HARNESS GBOX, ALC600, TELEMATIC 2, HW	132
311.103 Harness Pbox ALC600, XC,EPL	134
311.104 Harness, Control, Pass	138
311.105 Harness, Engine, Perkins404D	140
311.105A Harness, Engine, Deutz2.9T	144
311.105B Harness, Engine, Deutz 2011	148
311.105C Harness, Engine, GM3.0	152
311.105D Harness, Deutz 2.2 Tier IV, S80/85 XC	156
311.105E Harness, Deutz 2.2 Stage V, S80/85 XC	160
311.106 Harness, Platform, Manifold, ALC600, EPL	164
311.106A Harness, Ext Cable, Can Sensor, 18/4c	166
311.107 Harness, LSB1RS, S80/85	168
311.108 Harness, LST1O S80/85	170
311.109 Harness, PROX, Manifold, PLAT	172
311.110 Harness, LSB2S, S80/85	174
311.111 Harness, Boom Sensors	176
311.112 Assembly, Footswitch	178
311.113 Harness, PROX Sensor, ACP	180
311.114 Harness, Lights, Work	182
311.115 Harness, Recirculation, Plat	184
311.116 Harness, Lights, Drive	186
311.117 Harness Cooler Hydraulic	188
311.117A Harness, Oil Cooler, Lift Power	190
311.118 Harness, Limit Switch ASSY, LST3S, S80/85XC, EPL	192
311.119 Harness, Beacons, Flashing	194
311.120 Harness Manifold Function S80/85	196
311.123 Harness, BATT2 TO APU(+),S80	198
311.124 Harness, BATT2 TO APU(-),S80	200
311.125 Assembly Wire Separator Battery A	202
311.126 Harness Battery Negative	204
311.127 Assembly Wire Separator Battery M	206
311.128 Battery Cable,2/0,POS,RD,123"	208
311.128A Cable, Battery POS RED 136"	210
311.129 Cable, Battery Black 2/0 122"	212
311.129A Cable, Battery Black 2/0 128"	214
311.130 Cable Assy, Red 2/0	216
311.131 Cable, Red 2/0, 20"	218

Description	Page
311.132 Cable Assy, Black 2/0	220
311.133 Harness, Hertz GPS,8"	222
311.133A Harness, Telematics, Topcon, 17IN	224
311.133B Harness, Telematics, M8, ZTR	226
311.133C Harness, Telematics, ZTR, M5S	228
311.133D Assembly, Telematics, TTU 2830	230
312.1 Wire Harness Diagram, S-85 XC	232
312.101 Cable, Boom, Composite, S85XC	238
312.102 Harness, Deutz 2.2 CN4, S85 XC	240
312.103A Harness, Switch, JIB, PCON	244
313.101 Harness, Platform Manifold	246
400 Engine Components	**248**
401.1 Deutz TD2011L04i Engine - View 1	248
402.1 Deutz TD2011L04i Engine - View 2	252
403.1 Deutz TD2011L04i Engine - View 3	256
404.1 Deutz TD2011L04i Engine - View 4	258
405.1 Deutz TD 2.9L4 Engine - View 1	260
406.1 Deutz TD 2.9L4 Engine - View 2	264
407.1 Deutz TD 2.9L4 Engine - View 3	268
408.1 Deutz TD 2.9L4 Engine - View 4	272
409.1 GM 3.0L Engine - View 1	276
410.1 GM 3.0L Engine - View 2	278
411.1 GM 3.0L Engine - View 3	280
412.1 GM 3.0L Engine - View 4	282
413.1 Perkins 404D-22T Engine - View 1	292
414.1 Perkins 404D-22T Engine - View 2	298
415.1 Perkins 404D-22T Engine - View 3	302
416.1 Perkins 404D-22T Engine - View 4	304
417.1 Engine Tray	308
418.1 Perkins 404F-E22TA Engine - View 1	312
419.1 Perkins 404F-E22TA Engine - View 2	316
420.1 Perkins 404F-E22TA Engine - View 3	320
421.1 Perkins 404F-E22TA Engine - View 4	324
500 Boom Components	**326**
501.1 Cable Track Installation	326
502.1 Extension Boom Tube 1 (to SN S85XCH-4384)	330
502.2 Extension Boom Tube 1 (from SN S85XCH-4385)	334
503.1 Extension Boom Tube 2	338
504.1 Extension Boom Tube 3	340
505.1 Cable Assembly and Primary Extension Cylinder	342

Description	Page
506.1 Boom Link Assembly - View 1	346
507.1 Boom Link Assembly - View 2	350
508.1 Platform Rotator, S-80 XC	352
509.1 Jib Boom and Platform Rotator, S-85 XC (to SN S85XCH-3699)	354
509.2 Jib Boom and Platform Rotator, S-85 XC (from SN S85XCH-3700)	358
510.1 Platform Installation	364
511.1 Platform Overload Components	366
600 Platform Components	**368**
601.1 Platform Configuration	368
602.1 Platform Components, S-80 XC	370
602.2 Platform Components, S-85 XC	374
603.1 Platform Control Box, S-80 XC	378
603.2 Platform Control Box, S-85 XC	384
604.1 Joysticks	390
700 Hydraulic Components	**392**
701.1 Traction Manifold	392
702.1 Two-Speed/Brake Manifold	396
703.1 Function Enable Valve and Platform Rotator Manifold	398
704.1 Platform Manifold, S-80 XC	400
705.1 Platform Manifold, S-85 XC	402
706.1 Function Manifold	404
707.1 Generator Manifold	410
708.1 Pumps	412
709.1 4WD Drive and Steer System	414
710.1 Oscillate System	418
711.1 Turntable Components	420
712.1 Boom, S-80 XC	426
713.1 Boom, S-85 XC	428
800 Accessories	**430**
801.1 Alarm, Beacon Package and Driving Lights	430
802.1 Platform Options	432
803.1 Hostile Environment Package - Ground and Platform Control Box Covers	434
804.1 Hostile Environment Package - Booms	436
805.1 Hostile Environment Package - Turntable	438
806.1 Hostile Environment Package - Engine Air Cleaners	440
807.1 Hostile Environment Package - Cylinder Bellows, S-80 XC	442
808.1 Hostile Environment Package - Cylinder Bellows, S-85 XC	444
809.1 Panel Cradle Option	446
809.2 Panel Cradle Option	448

Description — Page

810.1 Half-Mesh and Pipe Cradle Option 450
811.1 Spare LPG Tank Option 454
812.1 Welder Option, Chassis Components - View 1 456
812.2 Welder Option, Chassis Components - View 2 462
813.1 Welder Option, Platform Components 464
814.1 Welder Option, Hoses and Fittings 468
815.1 3K Hydraulic Generator Option 470
816.1 3K Hydraulic Generator Option - Hoses and Fittings 474
817.1 Oil Cooler Components 476
818.1 Tow Package 478
819.1 Air Line/Power to Platform 480
820.1 Aircraft Protection Package 484
820.2 Aircraft Protection Package with Swing Gate 488
821.1 Operator Protection Structure 492
822.1 Cold Start Package 494
823.1 Fall Arrest Bar 496
824.1 Lift Guard Contact Alarm Option 498
825.1 Remote Charging Option 500
826.1 Tech Pro Link Kit 502
827.1 Pass Option, Deutz TD2.9 504
828.1 Telematics Option 506
829.1 Lift Tools Access Deck - 8 Feet 508
830.1 Lift Tools Access Deck - 6 Feet 512
831.1 Quickfit Oil Change System Ready (from SN S85XCH-3129) 516
832.1 Access Manager Option 518

Part Number Index 520

001.1 Parts Stocking List

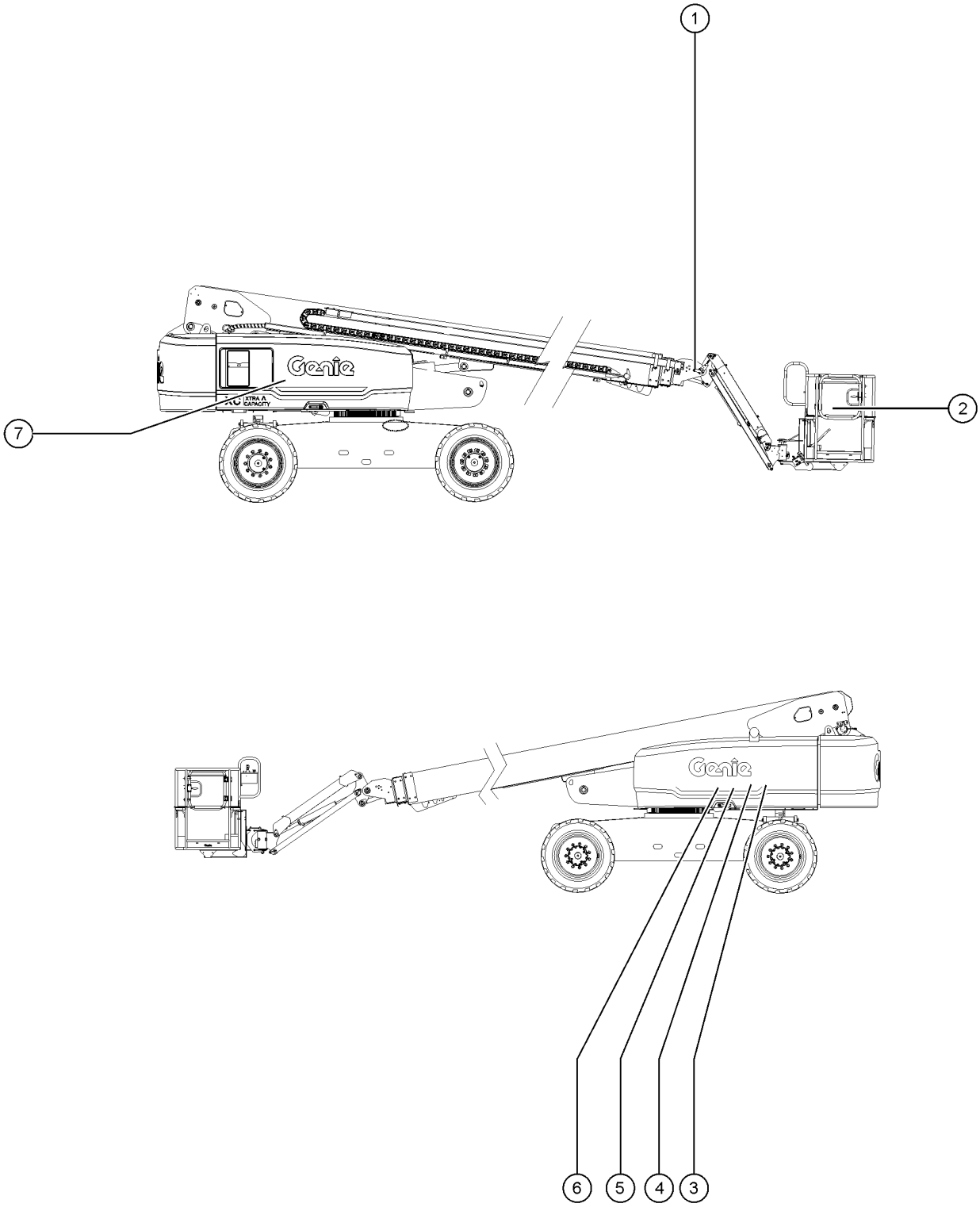

Item	Part No.	Description	Qty.
A		—INSPECTION SERVICE KITS—	
A-	75097GT	CHOCK,SERVICE Lift cylinder (refer to 506.1)	
A-	1278714GT	KIT,ENGINE SERVICE,250 HOUR,DEUTZ TD2.9,S80/Z80	
B		—GENERAL SERVICE PARTS—	
B-	1484GT	PAINT, AEROSOL, BRIGHT BLUE*** 12-ounce spray paint	
B-	1268GT	PAINT, AEROSOL, GENIE GRAY*** 12-ounce spray paint	
B-	1258567GT	PAINT, AEROSOL, TRAFFIC BLACK 12-ounce spray paint	
B-	32150GT	PAINT, WET, GENIE BLUE (1 GL)** 1-gallon	
B-	32151GT	PAINT, WET, GENIE GRAY (1GL)** 1-gallon	
B-	1257733GT	PAINT, WET, TRAFFIC BLACK(1 GL)** 1-gallon	
B-	66399GT	GREASE, DIELECTRIC 4 OZ**	
B-	60536GT	FUSE,20 AMP,MAXI	
B-	94327GT	FUSE,30 AMP	
B-	1283776GT	SEAL MARKER,CROSS CHECK,BLUE,TUBE	
B-	93500GT	PARKER DIGITAL PRESSURE GAUGE	
B-	49612GT	O-RING KIT (ORFS FITTINGS) O-ring kit, Parker	
B-	28750GT	O-RING KIT,FIELD SVC,ALL PROD* O-ring kit, SAE	
B-	33994GT	PLUG AND CAP KIT-SERVICE,37?** Plug and cap kit, SAE	
B-	60334GT	FILTER ASSY,HIGH PRESS SAE-12*	
1	1306377GT	ASSEMBLY, ANGLE SENSOR, BELLCRANK	1
2		—MANUALS—	
2-	27581GT	MANUAL, SAFTY MANNAL	
2-	31779GT	MANUAL,RESPON,A92.5 BOOM	
3		—DEUTZ TD2011L04i MODELS—	
3-	62425GT	FILTER,AIR CLEANER, SUPERBOOM (refer to 402.1)	
3-	29560GT	FILTER,FUEL/WTR SEP, DTZ 1008 (refer to 404.1)	
3-	49924GT	FILTER,OIL,DEUTZ (refer to 404.1)	
3-	102589GT	V-BELT, DEUTZ F4L2011 (refer to 404.1)	

001.1 Parts Stocking List

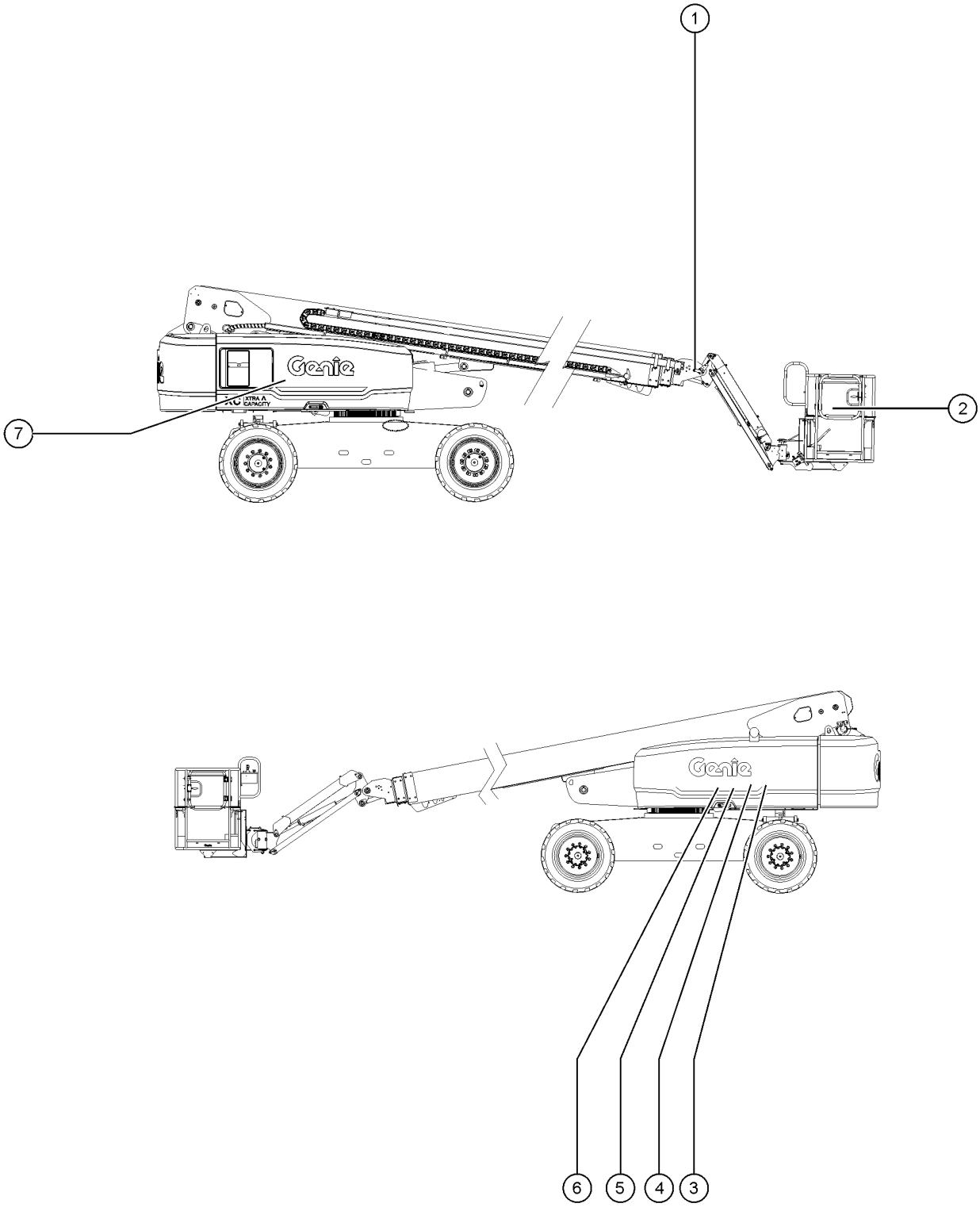

Item	Part No.	Description	Qty.
4		—DEUTZ TD 2.9L4 MODELS—	
4-	62425GT	FILTER,AIR CLEANER, SUPERBOOM (refer to 402.1)	
4-	214228GT	FILTER, DEUTZ 2.9, FUEL (refer to 408.1)	
4-	236260GT	FILTER, FUEL PRE-FILTER, SPIN-ON, DEUTZ (refer to 408.1)	
4-	49924GT	FILTER,OIL,DEUTZ (refer to 405.1)	
4-	1262866GT	FAN BELT, ALTERANTOR (refer to 407.1)	
5		—GM 3.0L MODELS—	
5-	62420GT	FILTER, AIR D2.9L4 (refer to 409.1)	
5-	65626GT	FILTER-FUEL, GM 3.0L ENGINE (refer to 412.1)	
5-	1272019GT	FILTER, FUEL	1
5-	65623GT	FILTER-OIL,GM 3.0L ENGINE (refer to 412.1)	
5-	65621GT	BELT-FAN, GM 3.0L ENGINE (refer to 412.1)	
5-	58412GT	SPARK PLUG WIRE SET,GM 3.0 (refer to 412.1)	
6		—PERKINS 404D-22T MODELS—	
6-	62420GT	FILTER, AIR D2.9L4 (refer to 414.1)	
6-	75020GT	SEPRTR/FLTR,FUEL DSL,15GPH,.30 (refer to 413.1)	
6-	89765GT	BELT, V (PERKINS 404) (refer to 415.1)	
6-	1262047GT	OIL FILTER,PERKINS 404D/F-22T (refer to 415.1)	
6-	1262484GT	FUEL FILTER ASSY,PERKINS 404D/ (refer to 415.1)	
7		—HYD FILTERS—	
7-	60857GT	FILTER,ELEMENT,BETA(5)=1000 All Models	
7-	1282117GT	FILTER,ELEMENT,HYD TANK,RETURN (refer to 301.1 and 302.1)	

101.1 Decals with Words, Hydraulic Tank Side, S-80 XC

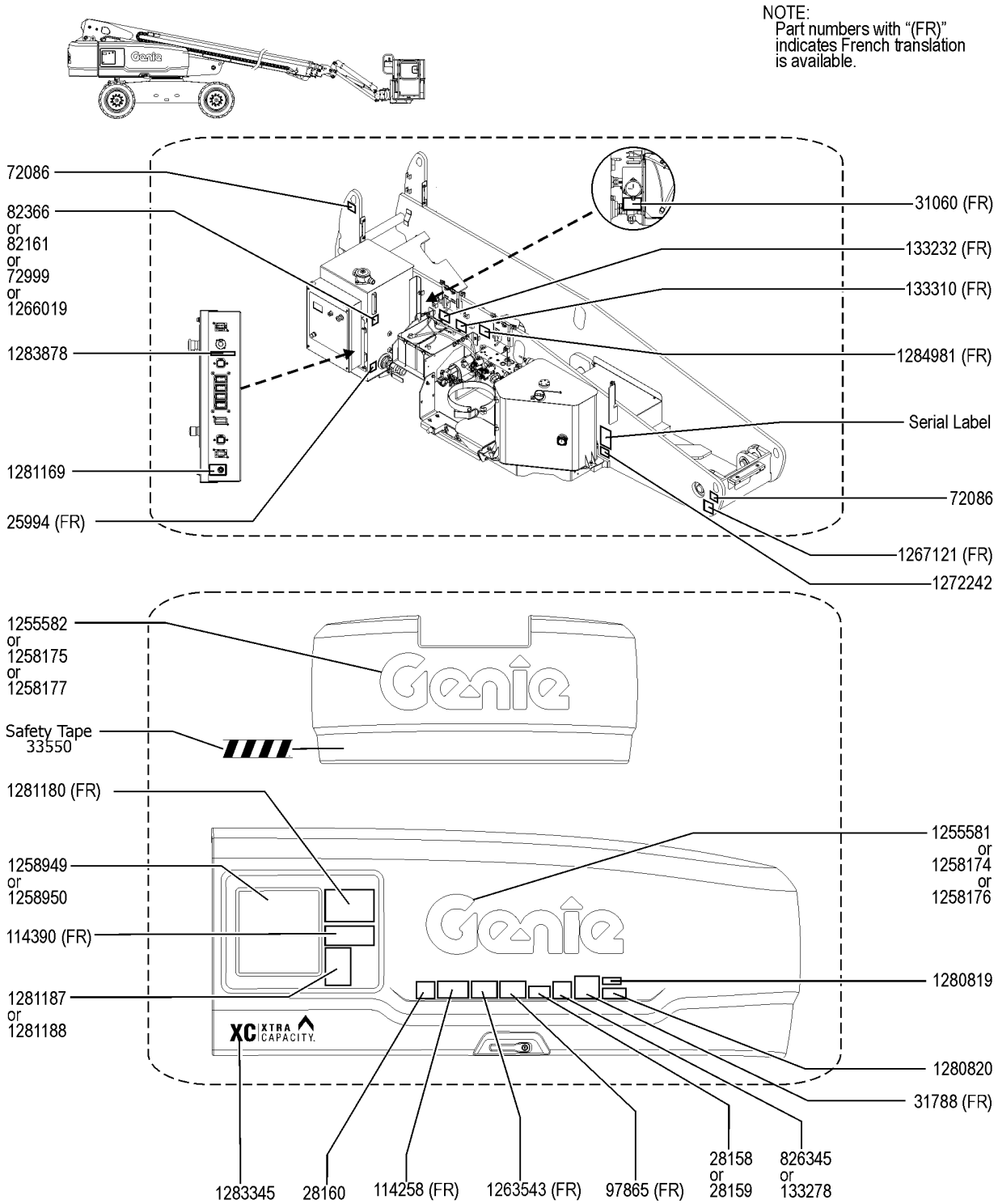

101.1 Decals with Words, Hydraulic Tank Side, S-80 XC

Item	Part No.	Description	Qty.
A	1302645GT	DECAL KIT,S-80/85 XC,COMP,WORD,ANSI & AUS	
B	1302644GT	INSTRUCTIONS,INSTALL,COMP,WORD, S-80/85 XC	
C	33550GT	TAPE,WARNING,BLK/YEL, 50'***	1 roll
1	25994GT	DECAL,NOTICE,SHUTOFF VALVES	1
2	28158GT	DECAL,LABEL,UNLEADED GAS ONLY Option, fuel	1
3	28159GT	DECAL,DIESEL Option, fuel	1
4	28160GT	DECAL,LABEL,LIQUID PROPANE Option, LPG Tank	1
5	31060GT	DECAL,DANGER DO NOT ALTER SWTC	1
6	31788GT	DECAL,DANGER,BATTERY SAFETY***	1
7	72086GT	DECAL,LABEL,LIFTING EYE	2
8	72999GT	DECAL,LABEL,PETRO CANADA*** Option, hydraulic oil	1
9	82161GT	DECAL,LABEL,UCON HYDROLUBE Option, hydraulic oil	1
10	82366GT	DECAL,CHEVRON RANDO HD Option, hydraulic oil	1
11	97865GT	DECAL,WARN,ELECTRO HAZARD	1
12	114258GT	DECAL,DANGER,NO SMOKING	1
13	114390GT	DECAL,DANGER,ELECT HAZARD***	1
14	133232GT	DECAL,LABEL,AUX BATTERY	1
15	133278GT	DECAL,LOW/ULTRA LOW SULFR FUEL (TPEM/ROW) diesel models only	1
16	133310GT	DECAL,LABEL,ENG STRT& CONTROLS	1
17	826345GT	DECAL,ULS DIESEL ONLY,TIER 4 Tier 4	1
18	1255581GT	DECAL COSMETIC,10" GENIE BLUE	1
19	1255582GT	DECAL COSMETIC,15" GENIE BLUE	1
20	1258174GT	DECAL COSMETIC,10" GENIE WHITE	1
21	1258175GT	DECAL COSMETIC,15" GENIE WHITE	1
22	1258176GT	DECAL COSMETIC,10" GENIE BLACK	1
23	1258177GT	DECAL COSMETIC,15" GENIE BLACK	1
24	1258950GT	OVERLAY GROUND CONTROLS S-BOOM (S-80 XC/HF)	1
24-	1286637GT	KIT,GBOX OVERLAY,ALC600,S-BOOMS S-80 XC (includes 1258950)	

101.1 Decals with Words, Hydraulic Tank Side, S-80 XC

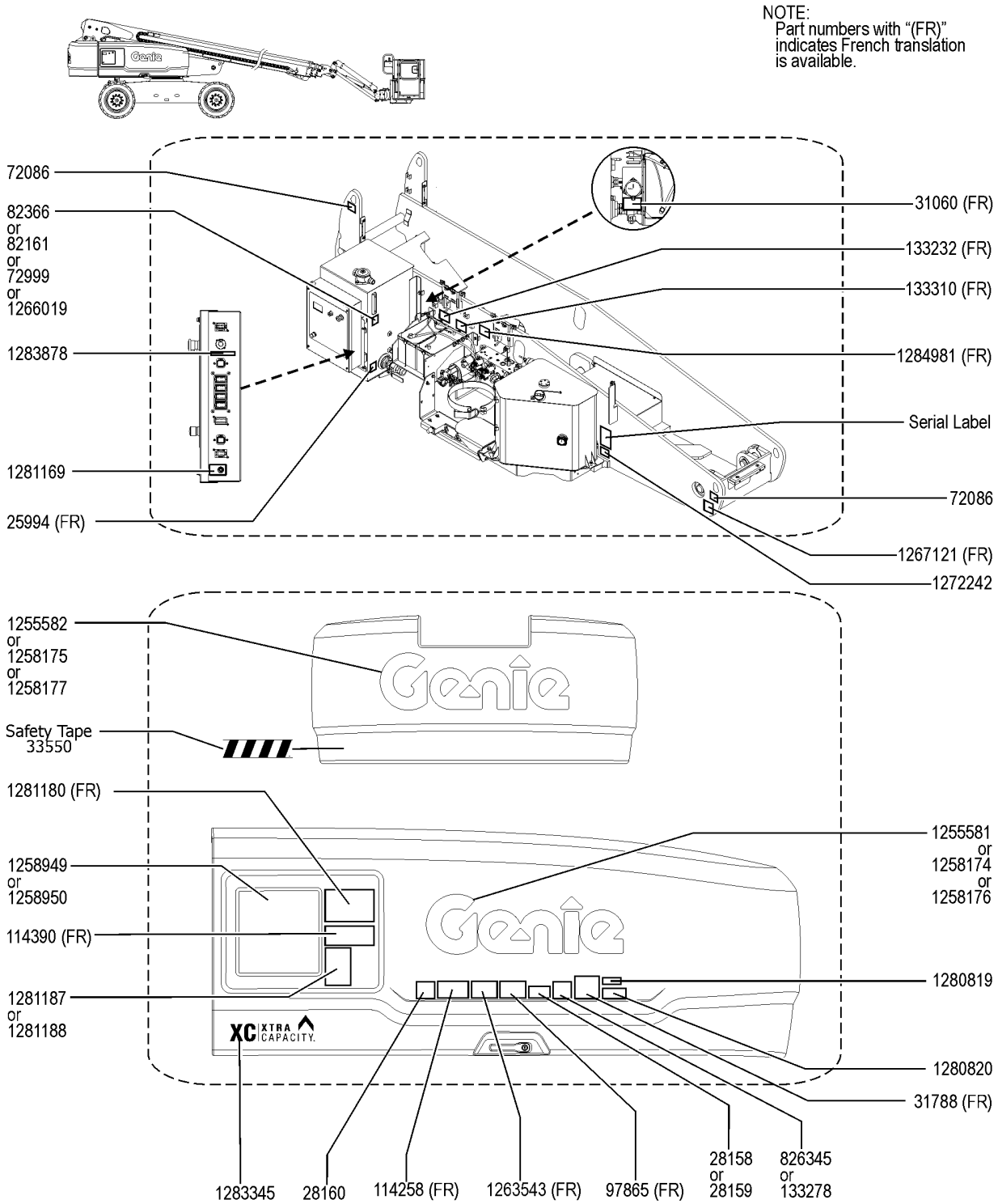

101.1 Decals with Words, Hydraulic Tank Side, S-80 XC

Item	Part No.	Description	Qty.
25	1263543GT	DECAL,COMPARTMENT ACCESS	1
26	1266019GT	DECAL, LABEL, SHELL TELLUS Option, hydraulic oil	1
27	1267121GT	DECAL,WARNING,CRUSH HAZARD	1
28	1272242GT	DECAL,MACHINE REGISTRATION/OWN	1
29	1280819GT	DECAL,WARNING,CANCER AND REPRODUCTIVE HARM, PROP 65 (US only)	1
30	1280820GT	DECAL,FUEL,DIESEL EXHAUST, PROP 65 (US only)	1
31	1281169GT	DECAL,RECOVERY SWITCH	1
32	1281180GT	DECAL,OPERATING INSTRUCTIONS	1
33	1281187GT	DECAL,EMERGENCY LOWERING,S-80 XC (S-80 XC/HF)	1
34	1283345GT	DECAL, COVER, XC XTRA CAPACITY	1
35	1283878GT	DECAL, TECHPRO LINK	1
36	1284981GT	DECAL,ACCUMULATOR EXPLOSION HAZARD,WORD	1

101.2 Decals with Words, Hydraulic Tank Side, S-85 XC

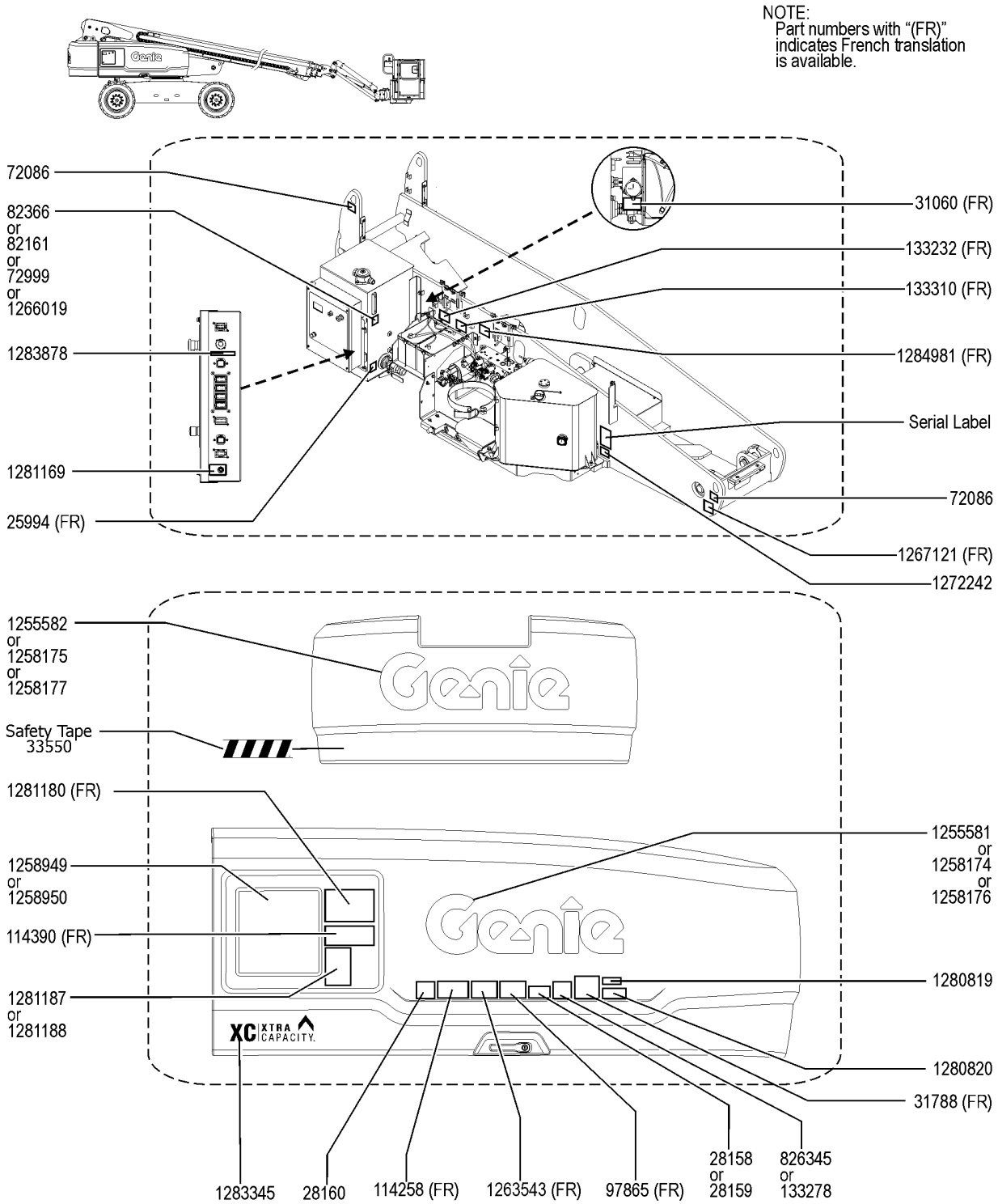

101.2 Decals with Words, Hydraulic Tank Side, S-85 XC

Item	Part No.	Description	Qty.
A	1302645GT	DECAL KIT,S-80/85 XC,COMP,WORD,ANSI & AUS	
B	1302644GT	INSTRUCTIONS,INSTALL,COMP,WORD, S-80/85 XC	
C	33550GT	TAPE,WARNING,BLK/YEL, 50'***	1 roll
1	25994GT	DECAL,NOTICE,SHUTOFF VALVES	1
2	28158GT	DECAL,LABEL,UNLEADED GAS ONLY Option, fuel	1
3	28159GT	DECAL,DIESEL Option, fuel	1
4	28160GT	DECAL,LABEL,LIQUID PROPANE Option, LPG Tank	1
5	31060GT	DECAL,DANGER DO NOT ALTER SWTC	1
6	31788GT	DECAL,DANGER,BATTERY SAFETY***	1
7	72086GT	DECAL,LABEL,LIFTING EYE	2
8	72999GT	DECAL,LABEL,PETRO CANADA*** Option, hydraulic oil	1
9	82161GT	DECAL,LABEL,UCON HYDROLUBE Option, hydraulic oil	1
10	82366GT	DECAL,CHEVRON RANDO HD Option, hydraulic oil	1
11	97865GT	DECAL,WARN,ELECTRO HAZARD	1
12	114258GT	DECAL,DANGER,NO SMOKING	1
13	114390GT	DECAL,DANGER,ELECT HAZARD***	1
14	133232GT	DECAL,LABEL,AUX BATTERY	1
15	133278GT	DECAL,LOW/ULTRA LOW SULFR FUEL (TPEM/ROW) diesel models only	1
16	133310GT	DECAL,LABEL,ENG STRT& CONTROLS	1
17	826345GT	DECAL,ULS DIESEL ONLY,TIER 4 Tier 4	1
18	1255581GT	DECAL COSMETIC,10" GENIE BLUE	1
19	1255582GT	DECAL COSMETIC,15" GENIE BLUE	1
20	1258174GT	DECAL COSMETIC,10" GENIE WHITE	1
21	1258175GT	DECAL COSMETIC,15" GENIE WHITE	1
22	1258176GT	DECAL COSMETIC,10" GENIE BLACK	1
23	1258177GT	DECAL COSMETIC,15" GENIE BLACK	1
24	1258949GT	OVERLAY GROUND CONTROLS S-BOOM JIB (S-85 XC/HF)	1
24B	1286638GT	KIT,GBOX OVERLAY,ALC600,S-BOOMS,JIB S-85 XC/HF (includes 1258949)	

101.2 Decals with Words, Hydraulic Tank Side, S-85 XC

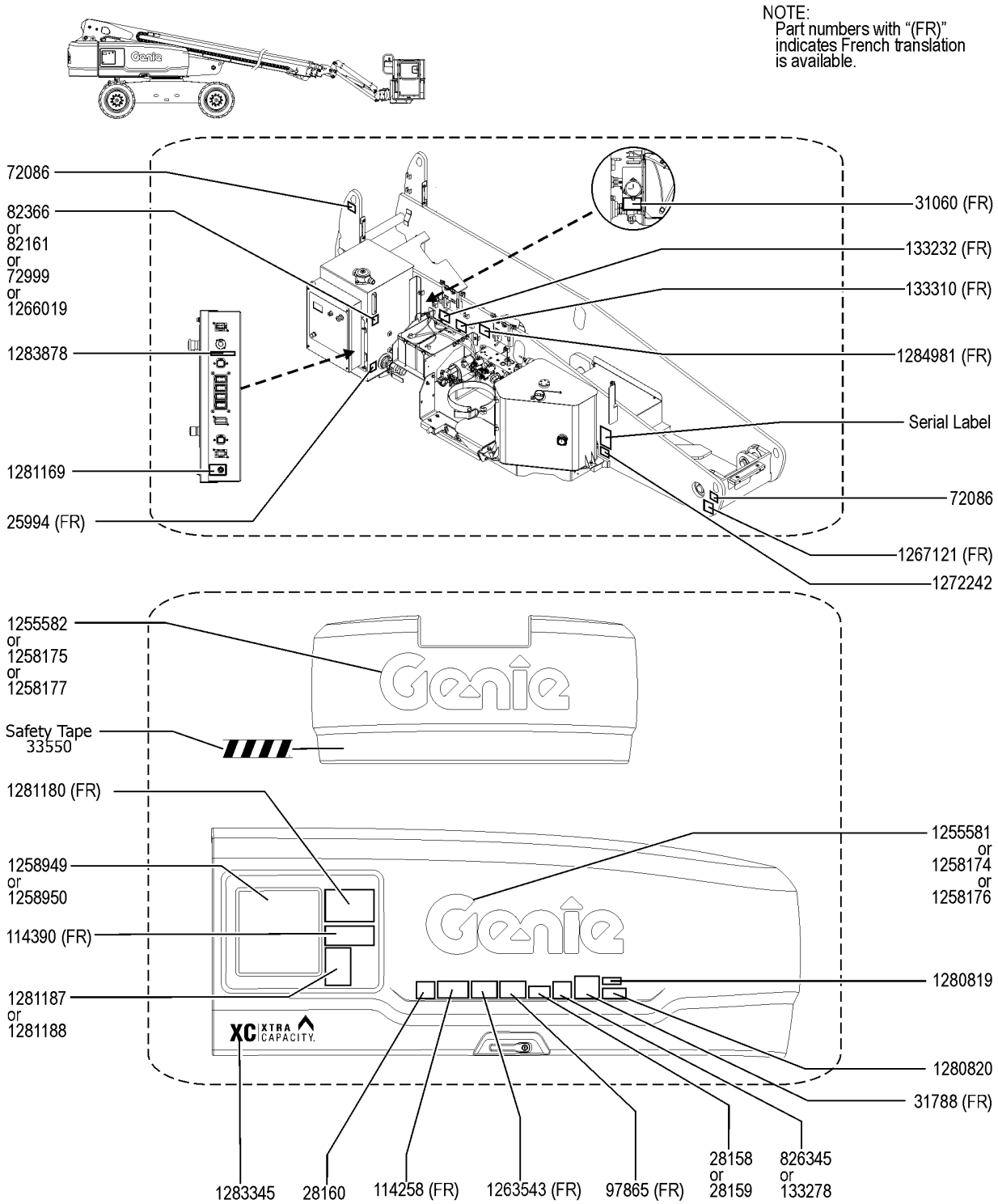

101.2 Decals with Words, Hydraulic Tank Side, S-85 XC

Item	Part No.	Description	Qty.
25	1263543GT	DECAL,COMPARTMENT ACCESS	1
26	1266019GT	DECAL, LABEL, SHELL TELLUS Option, hydraulic oil	1
27	1267121GT	DECAL,WARNING,CRUSH HAZARD	1
28	1272242GT	DECAL,MACHINE REGISTRATION/OWN	1
29	1280819GT	DECAL,WARNING,CANCER AND REPRODUCTIVE HARM, PROP 65 (US only)	1
30	1280820GT	DECAL,FUEL,DIESEL EXHAUST, PROP 65 (US only)	1
31	1281169GT	DECAL,RECOVERY SWITCH	1
32	1281180GT	DECAL,OPERATING INSTRUCTIONS	1
33	1281188GT	DECAL,EMERGENCY LOWERING (S-85 XC/HF)	1
34	1283345GT	DECAL, COVER, XC XTRA CAPACITY	1
35	1283878GT	DECAL, TECHPRO LINK	1
36	1284981GT	DECAL,ACCUMULATOR EXPLOSION HAZARD,WORD	1

102.1 Decals with Words, Chassis, S-80 XC

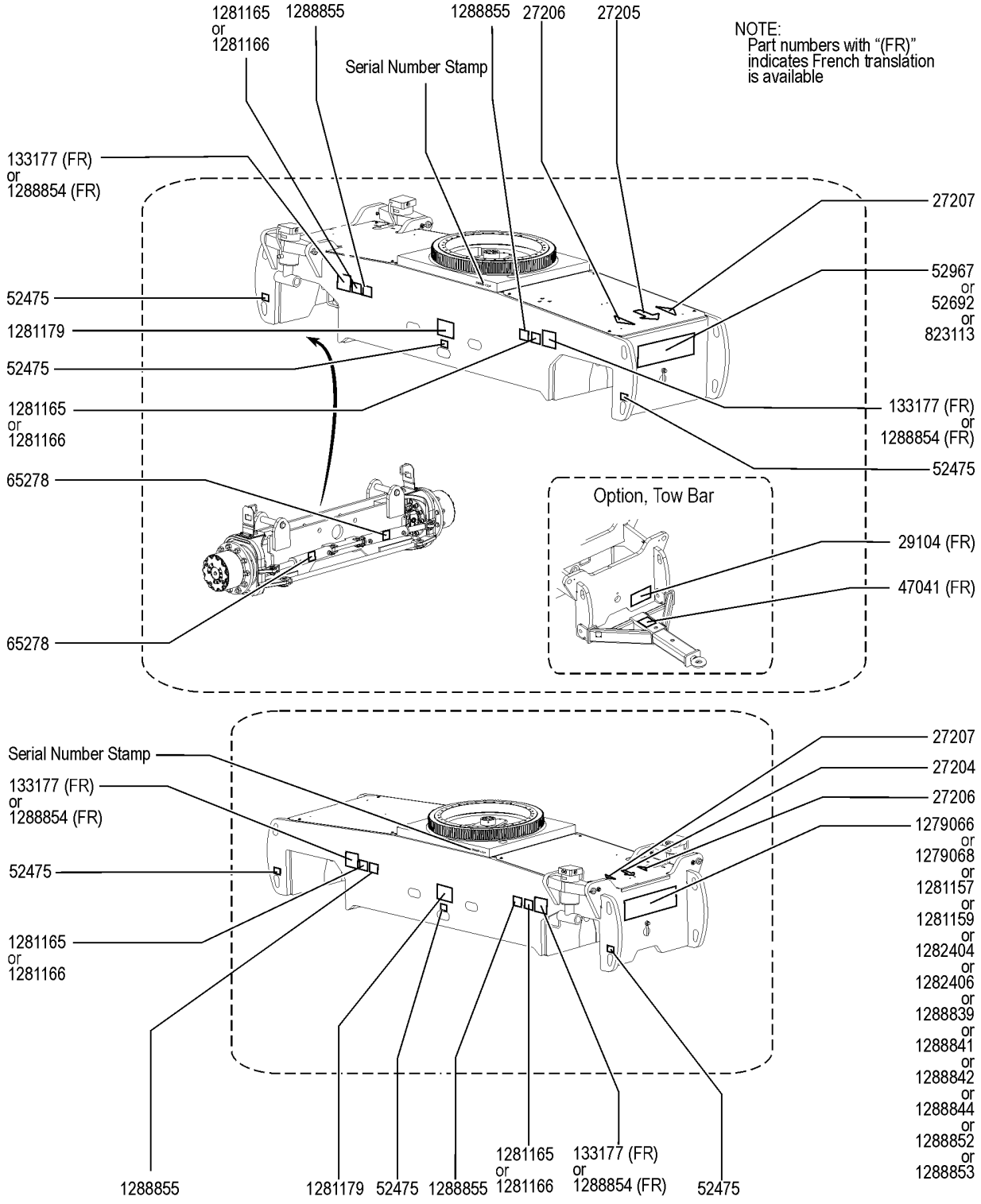

102.1 Decals with Words, Chassis, S-80 XC

Item	Part No.	Description	Qty.
1	27204GT	DECAL,ARROW BLUE	1
2	27205GT	DECAL,ARROW YELLOW LRG 9"	1
3	27206GT	DECAL,TRIANGLE,BLUE	2
4	27207GT	DECAL,TRIANGLE,YELLOW	2
5	29104GT	DECAL,TOWING INSTRUCTIONS Option, tow	1
6	47041GT	DECAL,CAUTION,TOWING SPEED Option, tow	1
7	52475GT	DECAL,LABEL,TRANSPORT TIEDOWN*	6
8	52692GT	DECAL,COSMETIC,4X4 BLUE	1
9	52967GT	DECAL,COSMETIC,4 X 4	1
10	65278GT	DECAL,CAUTION,NO STEP	2
11	133177GT	DECAL,DANGER/LABEL,TIRE SPECS (foam filled)	4
12	823113GT	DECAL,COSM,4X4,BLACK	1
13	1279066GT	DECAL, CHASSIS, S-80 XC (S-80 XC)	1
14	1281157GT	DECAL, CHASSIS, S-80 XC, BLUE (S-80 XC)	1
15	1281165GT	DECAL,LABEL,WHEEL LOAD S80 XC (S-80 XC/HF)	4
16	1281179GT	DECAL,TRANSPORT/LIFTING, S-80/85 XC	2
17	1282406GT	DECAL, CHASSIS, S-80 XC, BLK (S-80 XC)	1
18	1288839GT	DECAL, CHASSIS, S-80 HF (S-80 HF)	1
19	1288842GT	DECAL, CHASSIS, S-80 HF, BLUE (S-80 HF)	1
20	1288853GT	DECAL, CHASSIS, S-80 HF, BLK (S-80 HF)	1
21	1288854GT	DECAL,DANGER/LABEL,TIRE SPEC,HF (High Flotation ANSI & CSA only)	4
22	1288855GT	LABEL,TIRE PRESSURE,HF (High Flotation)	4

102.2 Decals with Words, Chassis, S-85 XC

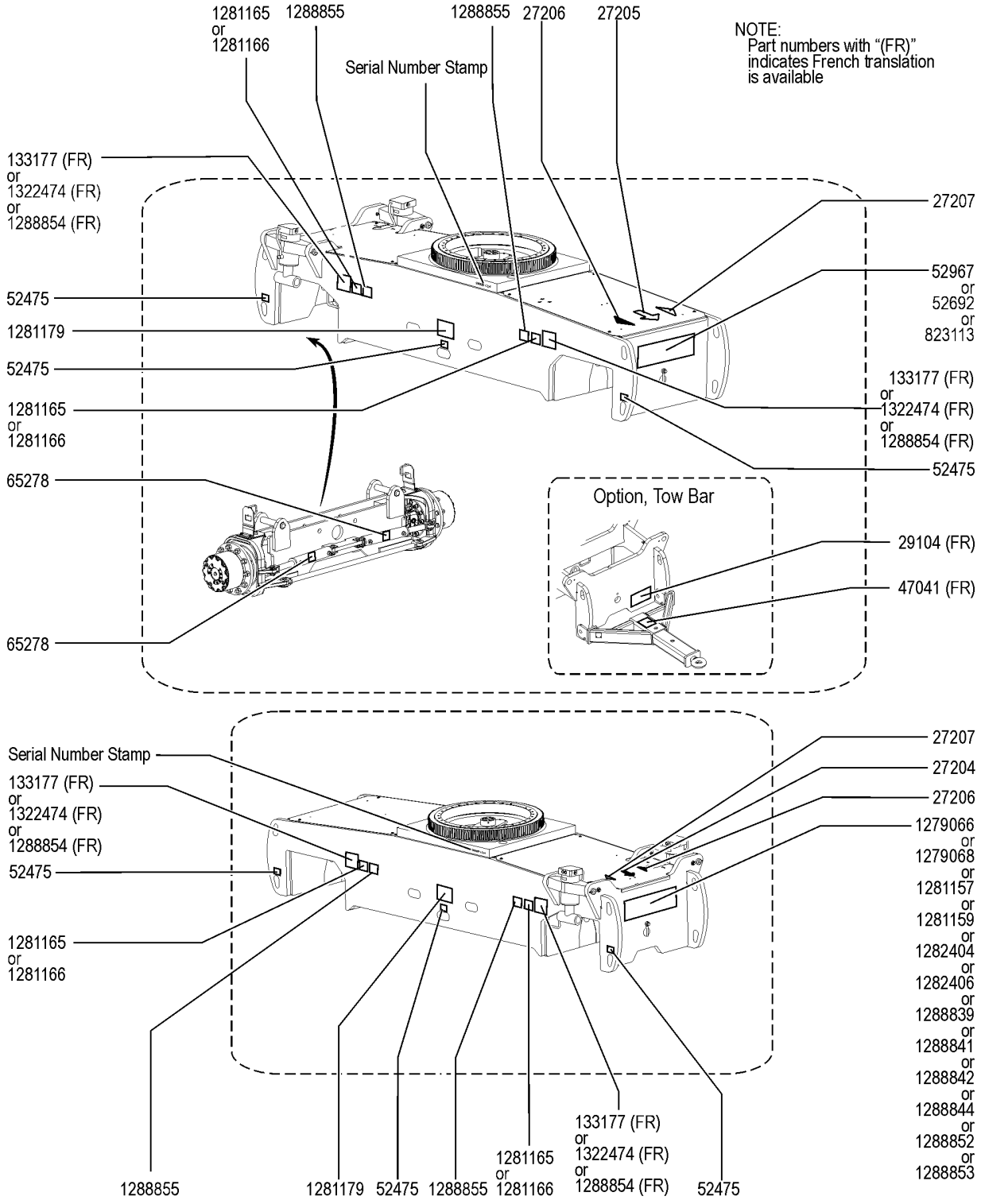

102.2 Decals with Words, Chassis, S-85 XC

Item	Part No.	Description	Qty.
1	27204GT	DECAL,ARROW BLUE	1
2	27205GT	DECAL,ARROW YELLOW LRG 9"	1
3	27206GT	DECAL,TRIANGLE,BLUE	2
4	27207GT	DECAL,TRIANGLE,YELLOW	2
5	29104GT	DECAL,TOWING INSTRUCTIONS Option, tow	1
6	47041GT	DECAL,CAUTION,TOWING SPEED Option, tow	1
7	52475GT	DECAL,LABEL,TRANSPORT TIEDOWN*	6
8	52692GT	DECAL,COSMETIC,4X4 BLUE	1
9	52967GT	DECAL,COSMETIC,4 X 4	1
10	65278GT	DECAL,CAUTION,NO STEP	2
11	133177GT	DECAL,DANGER/LABEL,TIRE SPECS (foam filled), (to SN S85XCH-5089)	4
11B	1322474GT	DECAL,DANGER/NOTICE,TIRESPECS,S80/85XC,Z80 from SN S85XCH-5090	4
12	823113GT	DECAL,COSM,4X4,BLACK	1
13	1279068GT	DECAL, CHASSIS, S-85 XC (S-85 XC)	1
14	1281159GT	DECAL, CHASSIS, S-85 XC, BLUE (S-85 XC)	1
15	1281166GT	DECAL,LABEL,WHEEL LOAD S85 XC (S-85 XC/HF)	4
16	1281179GT	DECAL,TRANSPORT/LIFTING, S-80/85 XC	2
17	1282404GT	DECAL, CHASSIS, S-85 XC, BLK (S-85 XC)	1
18	1288841GT	DECAL, CHASSIS, S-85 HF (S-85 HF)	1
19	1288844GT	DECAL, CHASSIS, S-85 HF, BLUE (S-85 HF)	1
20	1288852GT	DECAL, CHASSIS, S-85 HF, BLK (S-85 HF)	1
21	1288854GT	DECAL,DANGER/LABEL,TIRE SPEC,HF (High Flotation ANSI &CSA only)	4

103.1 Decals with Words, Engine Side

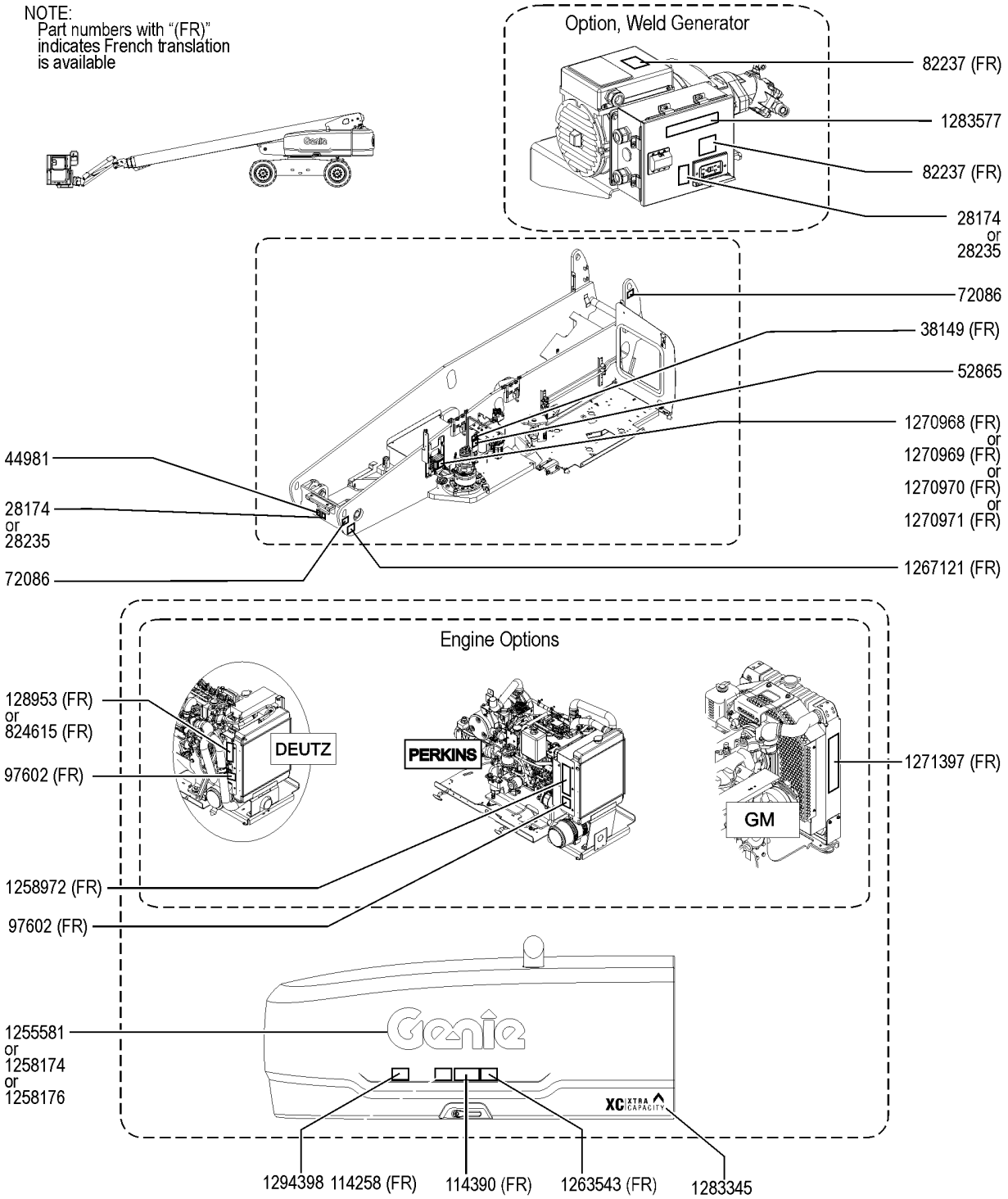

Item	Part No.	Description	Qty.
1	28174GT	DECAL,POWER TO PLATFORM 230V Option, Power to plat	2
2	28235GT	DECAL,POWER TO PLATFORM 115V Option, Power to plat	2
3	38149GT	DECAL,LABEL,PATENTS (US Only)	1
4	44981GT	DECAL,LABEL,AIRLINE 110 PSI Option, airline to plat	1
5	52865GT	DECAL,ANNUAL INSP*** (US Only)	1
6	72086GT	DECAL,LABEL,LIFTING EYE	2
7	82237GT	DECAL,DANGER,HIGH VOLTAGE (Option, Weld generator)	2
8	97602GT	DECAL,EXPLOSION HAZARD	1
9	114258GT	DECAL,DANGER,NO SMOKING	1
10	114390GT	DECAL,DANGER,ELECT HAZARD***	1
11	128953GT	DECAL,ENGINE SPEC,DEUTZ,TD2011 Deutz TD2011L04i	1
12	824615GT	DECAL,ENGINE SPEC,DEUTZ TD2.9 Deutz TD 2.9L4	1
13	1255581GT	DECAL COSMETIC,10" GENIE BLUE	1
14	1258174GT	DECAL COSMETIC,10" GENIE WHITE	1
15	1258176GT	DECAL COSMETIC,10" GENIE BLACK	1
16	1258972GT	DECAL,ENGINE SPEC,PERKINS 404D-22T Perkins 404D-22T	1
17	1263543GT	DECAL,COMPARTMENT ACCESS	1
18	1267121GT	DECAL,WARNING,CRUSH HAZARD	1
19	1270968GT	DECAL, VEC, PERKINS404D, S80 Perkins 404D-22T	1
20	1270969GT	DECAL, VEC, DEUTZ2.9T, S80 Deutz TD 2.9L4	1
21	1270970GT	DECAL, VEC, DEUTZ2011T, S80 Deutz TD2011L04i	1
22	1270971GT	DECAL, VEC, GM3.0, S80 GM 3.0L	1
23	1271397GT	DECAL, ENG, SPECS, GM 3.0L GM 3.0L	1
24	1283345GT	DECAL, COVER, XC XTRA CAPACITY	1
25	1283577GT	DECAL, LIFT^POWER, 1X7 INCH (Option, Welder)	1

104.1 Decals with Words, Boom S-80 XC

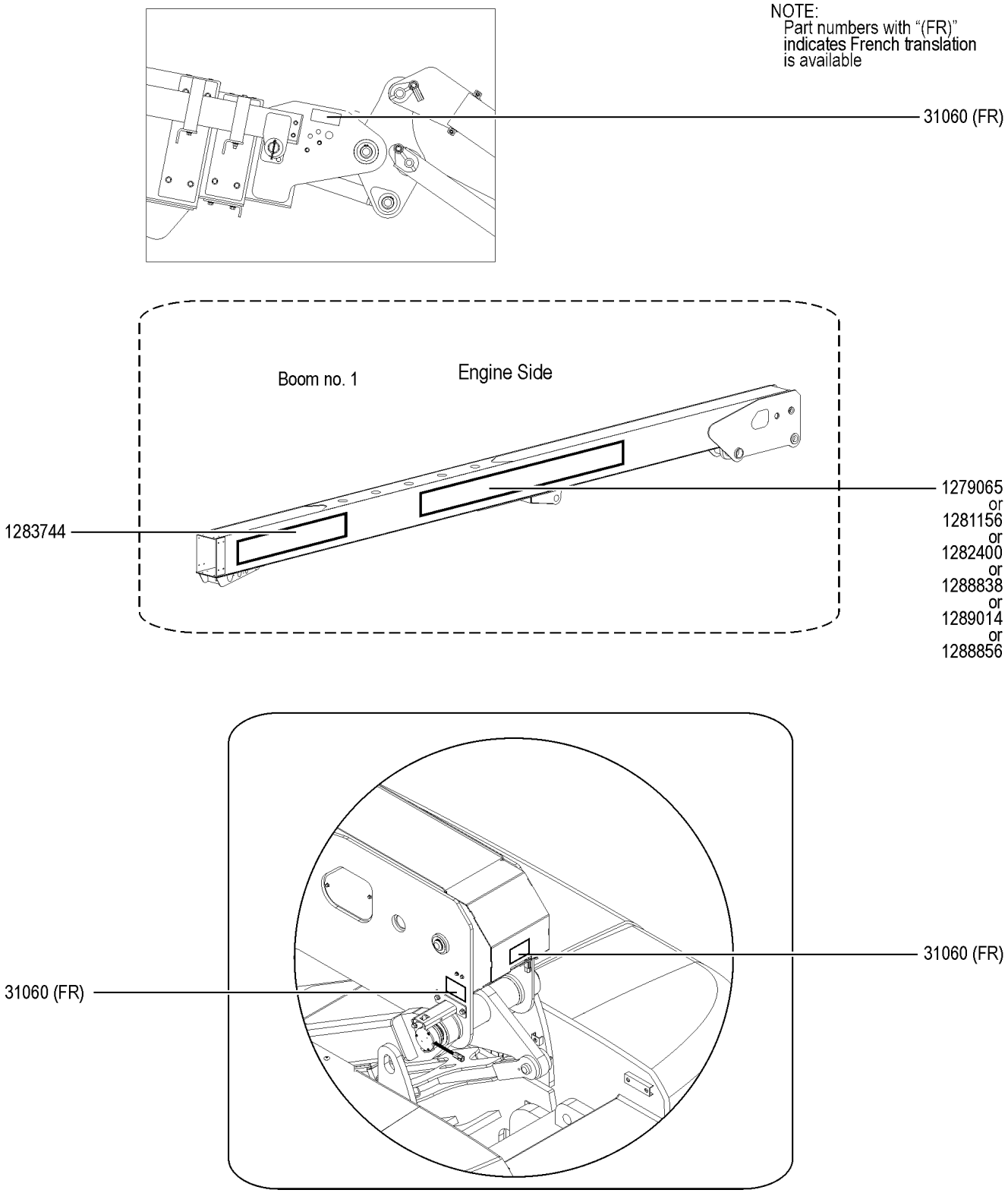

104.1 Decals with Words, Boom S-80 XC

Item	*Part No.*	*Description*	*Qty.*
1	31060GT	DECAL,DANGER DO NOT ALTER SWTC	3
2	1279065GT	DECAL, BOOM, GENIE S-80 XC (S-80 XC)	1
3	1281156GT	DECAL, BOOM, GENIE S-80 XC, BLUE (S-80 XC)	1
4	1282400GT	DECAL, BOOM, GENIE S-80 XC, BLK (S-80 XC)	1
5	1283744GT	DECAL, LIFT^POWER (Option, welder)	1
6	1288838GT	DECAL, BOOM, GENIE S-80 HF (S-80 HF)	1
7	1288856GT	DECAL, BOOM, GENIE S-80 HF, BLK (S-80 HF)	1
8	1289014GT	DECAL, BOOM, GENIE S-80 HF, BLUE (S-80 HF)	1

105.1 Decals with Words, Boom S-85 XC

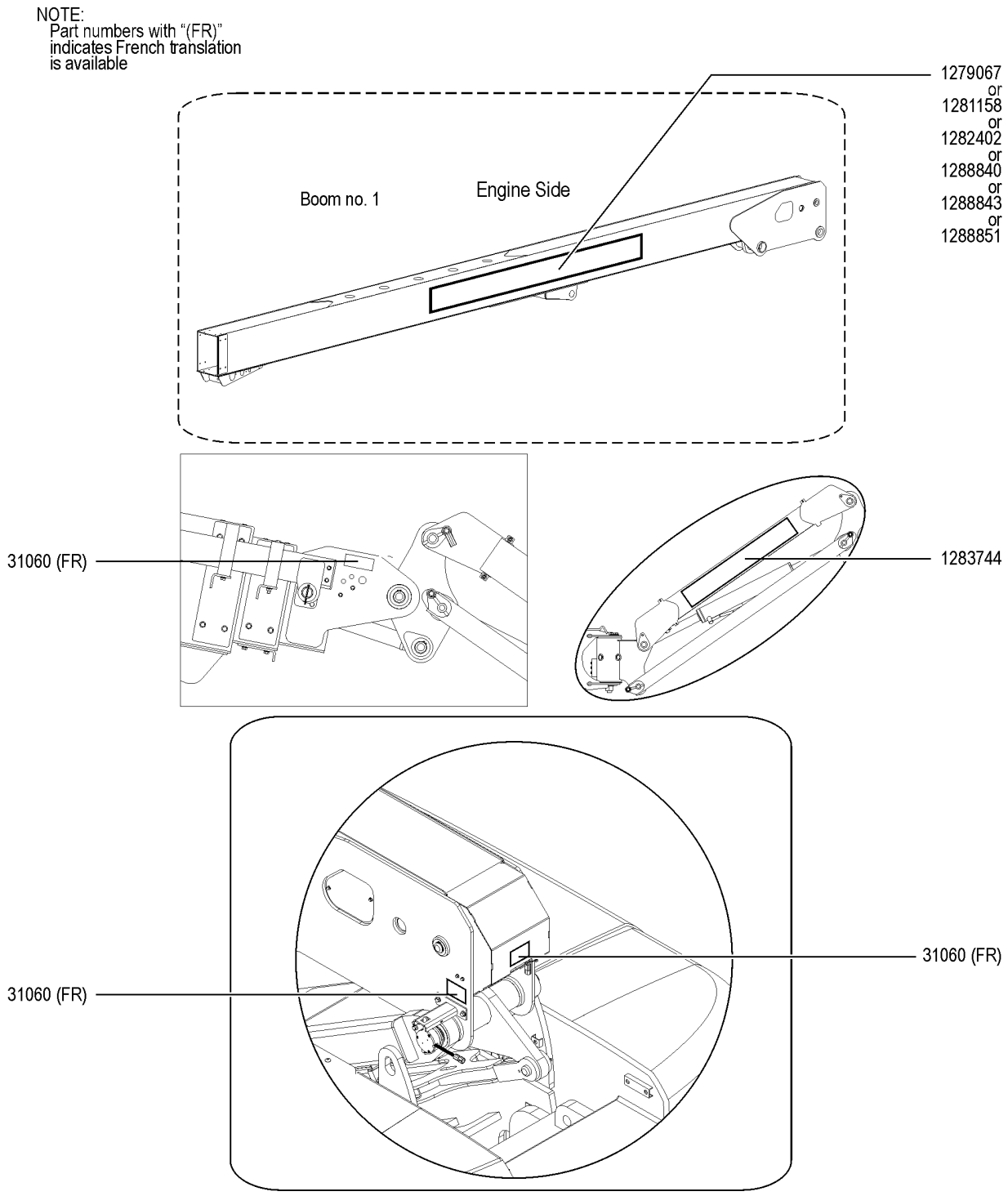

105.1 Decals with Words, Boom S-85 XC

Item	*Part No.*	*Description*	*Qty.*
1	31060GT	DECAL,DANGER DO NOT ALTER SWTC	3
2	1279067GT	DECAL, BOOM, GENIE S-85 XC (S-85 XC)	1
3	1281158GT	DECAL, BOOM, GENIE S-85 XC, BLUE (S-85 XC)	1
4	1282402GT	DECAL, BOOM, GENIE S-85 XC, BLK (S-85 XC)	1
5	1283744GT	DECAL, LIFT^POWER (Option, welder)	1
6	1288840GT	DECAL, BOOM, GENIE S-85 HF (S-85 HF)	1
7	1288843GT	DECAL, BOOM, GENIE S-85 HF, BLUE (S-85 HF)	1
8	1288851GT	DECAL, BOOM, GENIE S-85 HF, BLK (S-85 HF)	1

106.1 Decals with Words, Platform, S-80 XC

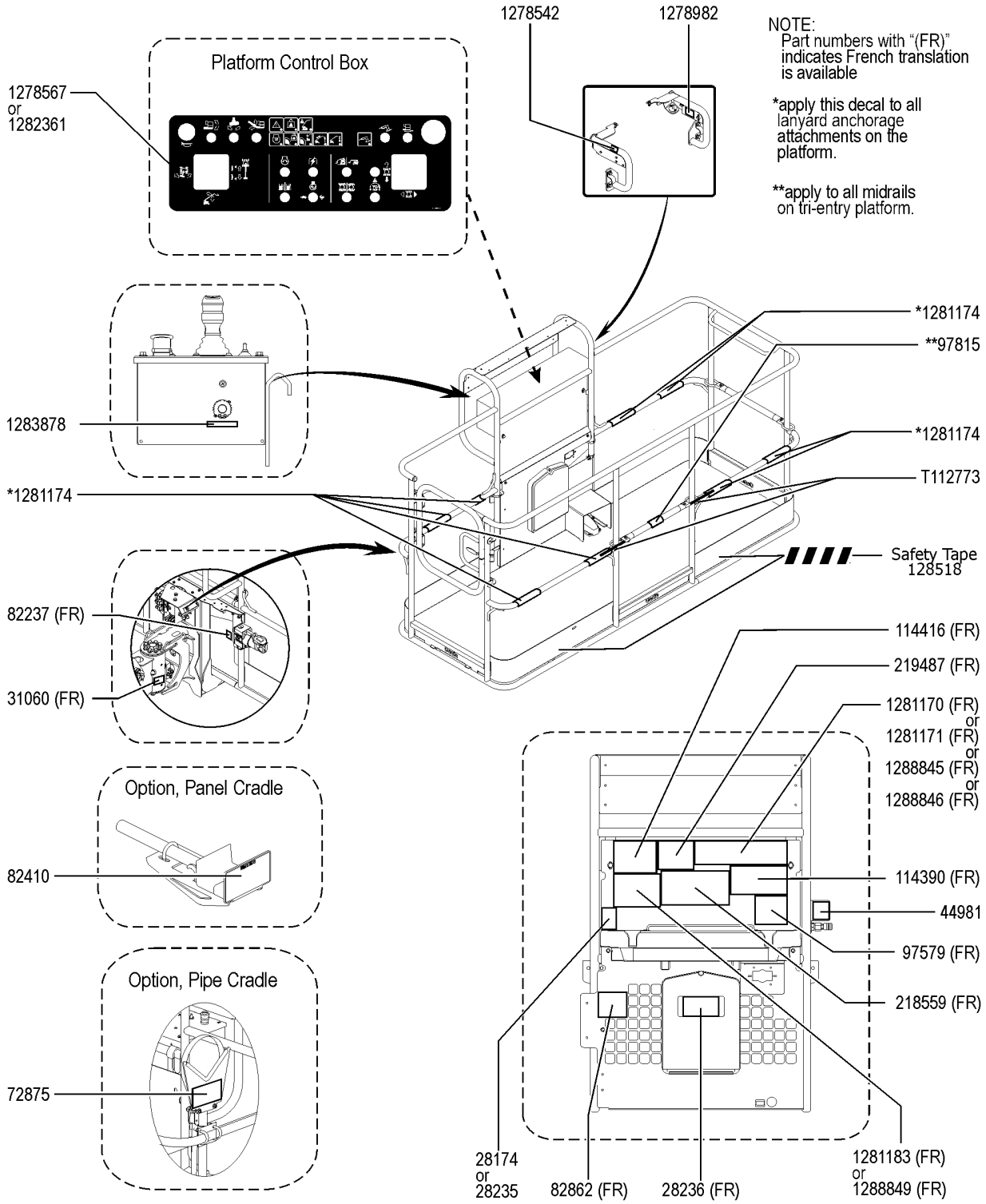

106.1 Decals with Words, Platform, S-80 XC

Item	Part No.	Description	Qty.
A	1302647GT	DECAL KIT,S-80/85 XC,PLAT,WORD,ANSI & AUS	
B	1302646GT	INSTRUCTIONS,INSTALL,PLAT,WORD, S-80/85 XC	
C	33550GT	TAPE,WARNING,BLK/YEL, 50'***	
1	28174GT	DECAL,POWER TO PLATFORM 230V Option, Power to Plat	1
2	28235GT	DECAL,POWER TO PLATFORM 115V Option, Power to Plat	1
3	28236GT	DECAL,WARN,IMPROPER OPERATION	1
4	31060GT	DECAL,DANGER DO NOT ALTER SWTC	1
5	44981GT	DECAL,LABEL,AIRLINE 110 PSI (Option, Airline to plat)	1
6	72875GT	DECAL,WARNING,PIPE CRADLE,BOOM Option, pipe cradle	2
7	82237GT	DECAL,DANGER,HIGH VOLTAGE Option, welder	1
8	82410GT	DECAL,WARNING,PANEL CRADLE Option, panel cradle	2
9	82862GT	DECAL,FIRE EXTINGUISHER Option, welder	1
10	97579GT	DECAL,DANGER,TIP-OVER,WELDER** Option, welder	1
11	97815GT	DECAL,LABEL,LOWER MIDRAIL	1
12	114390GT	DECAL,DANGER,ELECT HAZARD***	1
13	114416GT	DECAL,DANGER,TIPOVER,TILT	1
14	218559GT	DECAL,DANGER/WARNING COMBO	1
15	219487GT	DECAL,PLATFORM OVERLOAD	1
16	1278542GT	DECAL, INSTRUCTION, CONTACT ALARM	1
17	1278567GT	OVERLAY,PLATFORM CONTROLS,S-BOOM,XC	1
18	1278982GT	DECAL, INSTRUCTION, ACTUATOR SWITCH SOCKET	1
19	1281170GT	DECAL,DANGER,CAPICITY S-80 XC,ANSI WORD (S-80 XC)	1
20	1281174GT	DECAL,LANYARD,FALL ARREST/FALL RESTRAINED	8
21	1281183GT	DECAL,WARNING,RUNAWAY MACHINE,WORD (S-80 XC/S-85 XC)	1
22	1282361GT	DECAL,PROTECTOR,CLEAR,S-80/85 XC	1
23	1283878GT	DECAL, TECHPRO LINK	1
24	1288845GT	DECAL,DANGER,CAPACITY S-80 HF,WORD (S-80 HF) (ANSI/CSA only)	1
25	1288849GT	DECAL,WARNING,RUNAWAY MACHINE,S-80/85 HF,WORD (S-80 HF/S-85 HF) (ANSI/CSA only)	1

106.1 Decals with Words, Platform, S-80 XC

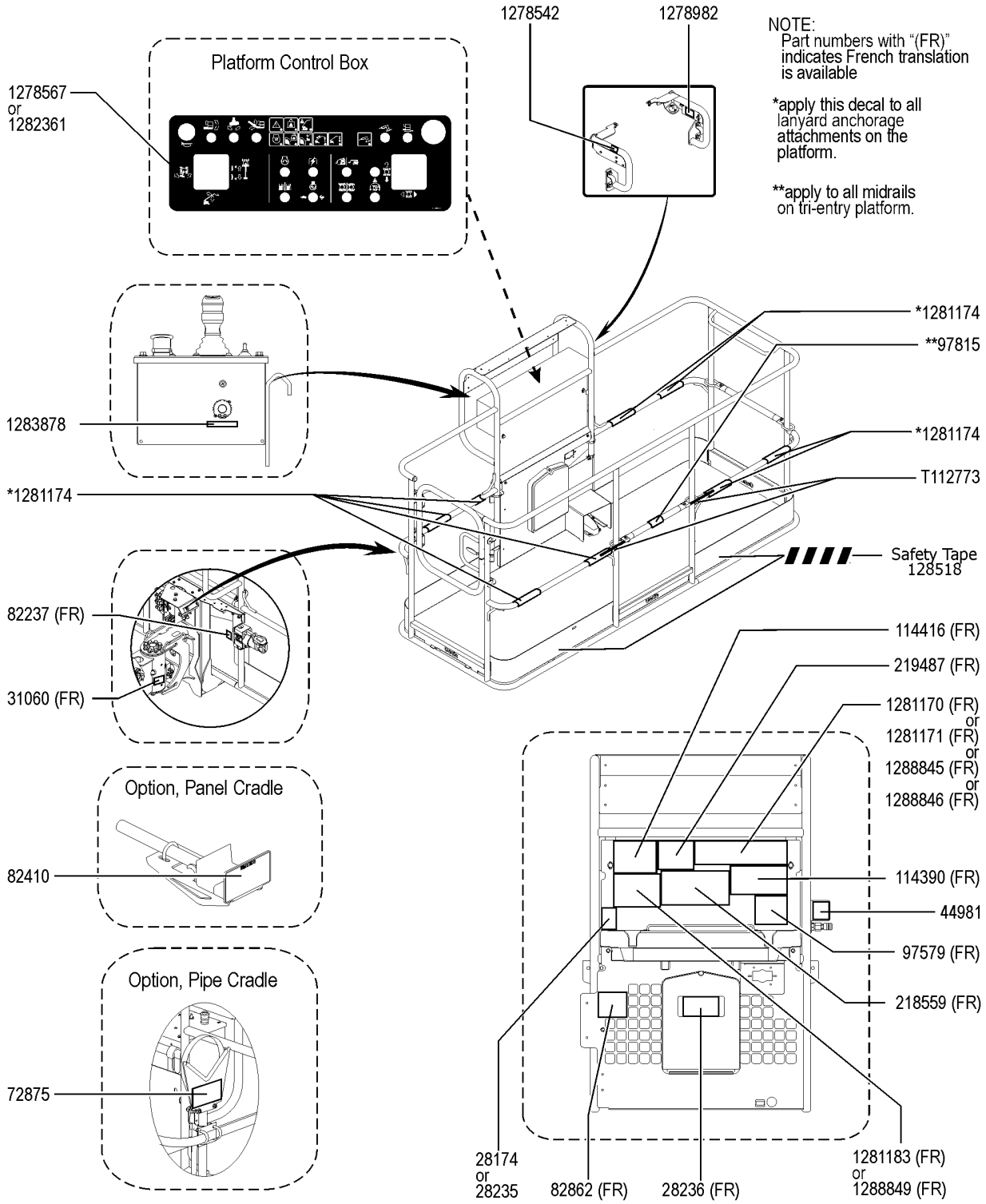

Item	*Part No.*	*Description*	*Qty.*
26	T112773GT	TAPE, PROTECTIVE MASK	2

106.2 Decals with Words, Platform, S-85 XC

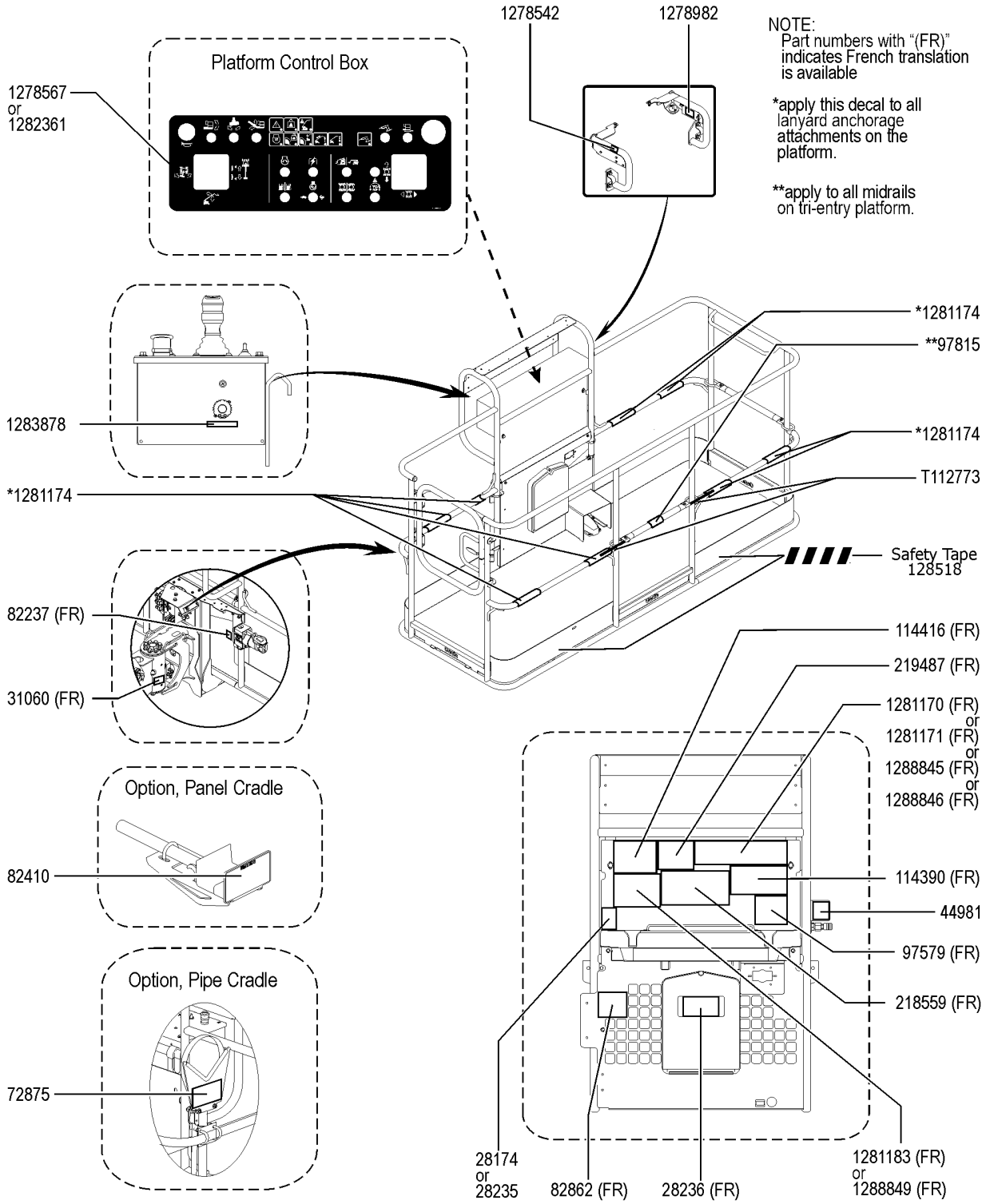

106.2 Decals with Words, Platform, S-85 XC

Item	Part No.	Description	Qty.
A	1302647GT	DECAL KIT,S-80/85 XC,PLAT,WORD,ANSI & AUS	
B	1302646GT	INSTRUCTIONS,INSTALL,PLAT,WORD, S-80/85 XC	
C	33550GT	TAPE,WARNING,BLK/YEL, 50'***	
1	28174GT	DECAL,POWER TO PLATFORM 230V Option, Power to Plat	1
2	28235GT	DECAL,POWER TO PLATFORM 115V Option, Power to Plat	1
3	28236GT	DECAL,WARN,IMPROPER OPERATION	1
4	31060GT	DECAL,DANGER DO NOT ALTER SWTC	1
5	44981GT	DECAL,LABEL,AIRLINE 110 PSI (Option, Airline to plat)	1
6	72875GT	DECAL,WARNING,PIPE CRADLE,BOOM Option, pipe cradle	2
7	82237GT	DECAL,DANGER,HIGH VOLTAGE Option, welder	1
8	82410GT	DECAL,WARNING,PANEL CRADLE Option, panel cradle	2
9	82862GT	DECAL,FIRE EXTINGUISHER Option, welder	1
10	97579GT	DECAL,DANGER,TIP-OVER,WELDER** Option, welder	1
11	97815GT	DECAL,LABEL,LOWER MIDRAIL	1
12	114390GT	DECAL,DANGER,ELECT HAZARD***	1
13	114416GT	DECAL,DANGER,TIPOVER,TILT	1
14	218559GT	DECAL,DANGER/WARNING COMBO	1
15	219487GT	DECAL,PLATFORM OVERLOAD	1
16	1278542GT	DECAL, INSTRUCTION, CONTACT ALARM	1
17	1278567GT	OVERLAY,PLATFORM CONTROLS,S-BOOM,XC	1
18	1278982GT	DECAL, INSTRUCTION, ACTUATOR SWITCH SOCKET	1
19	1281171GT	DECAL,DANGER,CAPICITY S-85XC,ANSI WORD (S-85 XC)	1
20	1281174GT	DECAL,LANYARD,FALL ARREST/FALL RESTRAINED	8
21	1281183GT	DECAL,WARNING,RUNAWAY MACHINE,WORD (S-80 XC/S-85 XC)	1
22	1282361GT	DECAL,PROTECTOR,CLEAR,S-80/85 XC	1
23	1283878GT	DECAL, TECHPRO LINK	1
24	1288846GT	DECAL,DANGER,CAPACITY S-85 HF,WORD (S-85 HF) (ANSI/CSA only)	1
25	1288849GT	DECAL,WARNING,RUNAWAY MACHINE,S-80/85 HF,WORD (S-80 HF/S-85 HF) (ANSI/CSA only)	1

106.2 Decals with Words, Platform, S-85 XC

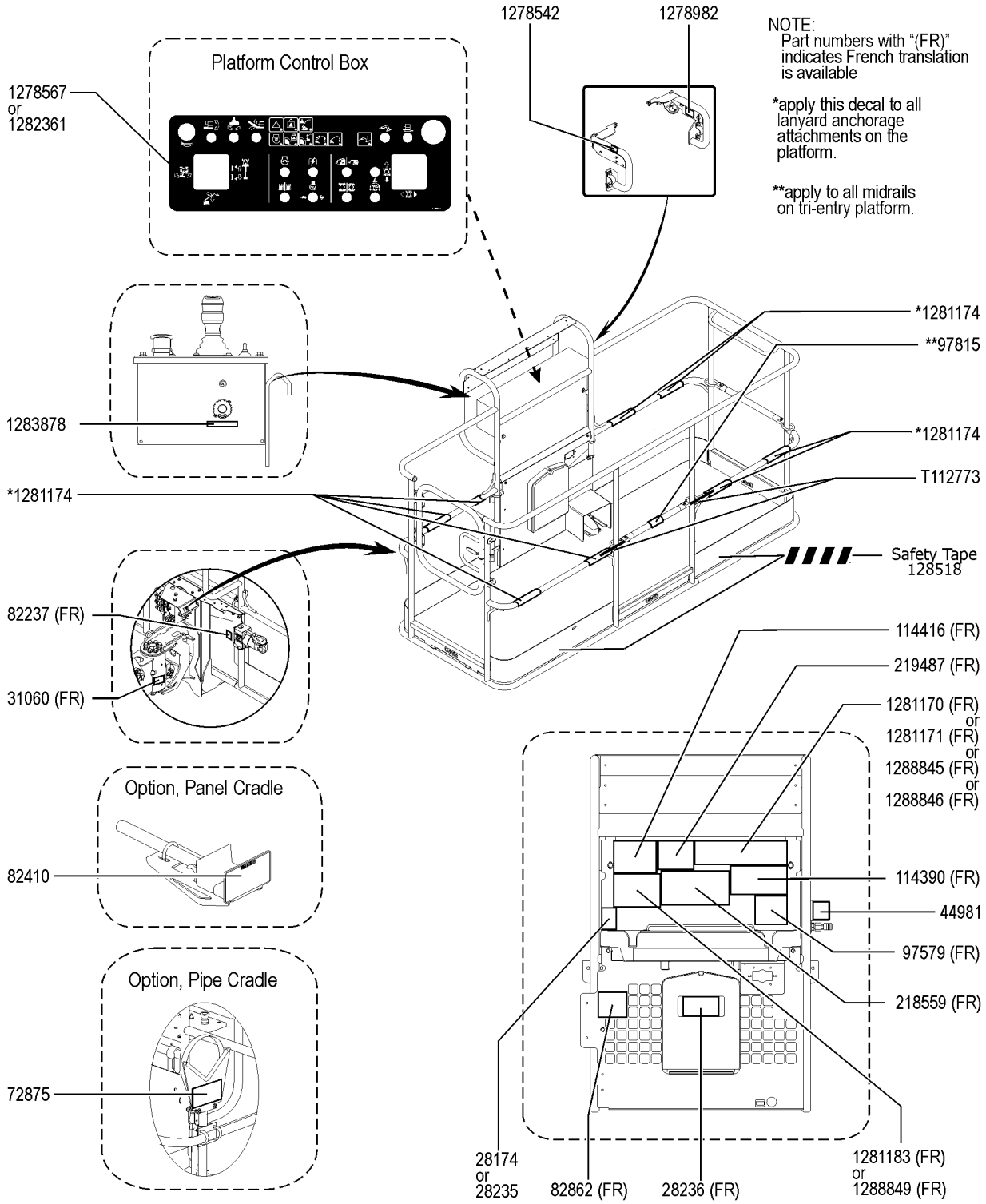

Item	*Part No.*	*Description*	*Qty.*
26	T112773GT	TAPE, PROTECTIVE MASK	2

107.1 Decals with Symbols, Hydraulic Tank Side, S-80 XC

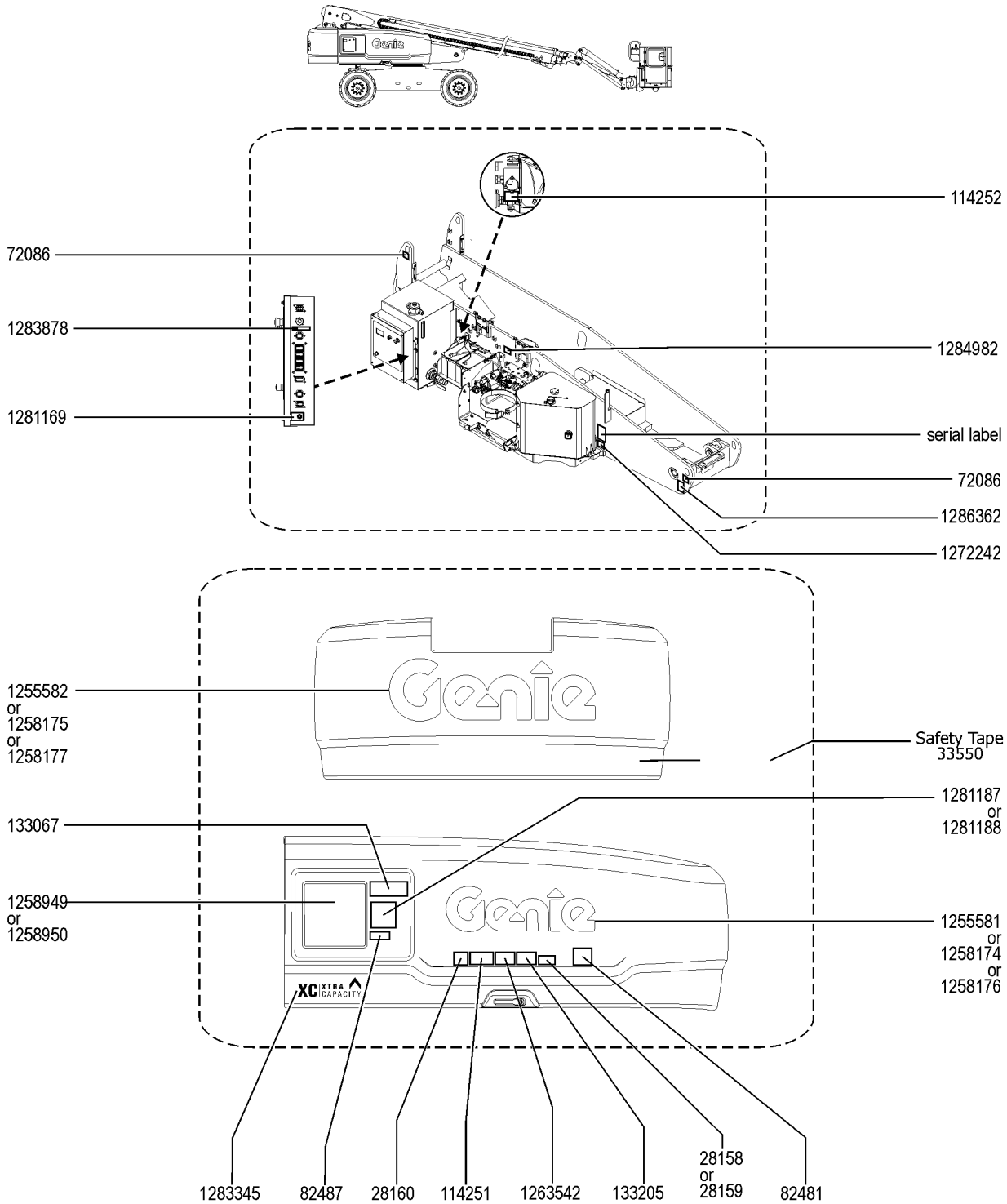

107.1 Decals with Symbols, Hydraulic Tank Side, S-80 XC

Item	Part No.	Description	Qty.
A	1302649GT	DECAL KIT,S-80/85 XC,COMP,SYMBOL,ANSI & CE	
B	1302648GT	INSTRUCTIONS,INSTALL,COMP,SYMBOL, S-80/85 XC	
C	1302650GT	INSTRUCTIONS,INSTALL,PLAT,SYMBOL, S-80/85 XC	
D	33550GT	TAPE,WARNING,BLK/YEL, 50'***	1 roll
1	28158GT	DECAL,LABEL,UNLEADED GAS ONLY Option, fuel	1
2	28159GT	DECAL,DIESEL Option, fuel	1
3	28160GT	DECAL,LABEL,LIQUID PROPANE Option, LPG Tank	1
4	72086GT	DECAL,LABEL,LIFTING EYE	2
5	82481GT	DECAL,SYMBOL-BATTERY SAFETY	1
6	82487GT	DECAL,SYMBOL-READ THE MANUAL	1
7	114251GT	DECAL,LABEL,NO SMOKING,SYMB	1
8	114252GT	DECAL,LABEL,TIP OVER LMT SWTCH	1
9	133067GT	DECAL,DANGER,ELEC.HAZ.STAY CLR	1
10	133205GT	DECAL,LABEL, ELECTRO HAZARD	1
11	1255581GT	DECAL COSMETIC,10" GENIE BLUE	1
12	1255582GT	DECAL COSMETIC,15" GENIE BLUE	1
13	1258174GT	DECAL COSMETIC,10" GENIE WHITE	1
14	1258175GT	DECAL COSMETIC,15" GENIE WHITE	1
15	1258176GT	DECAL COSMETIC,10" GENIE BLACK	1
16	1258177GT	DECAL COSMETIC,15" GENIE BLACK	1
17	1258950GT	OVERLAY GROUND CONTROLS S-BOOM (S-80 XC/S-80 HF)	1
17B	1286637GT	KIT,GBOX OVERLAY,ALC600,S-BOOMS S-80 XC, S-80 HF (includes 1258950)	
18	1263542GT	DECAL, COMPARTMENT ACCESS	1
19	1272242GT	DECAL,MACHINE REGISTRATION/OWN	1
20	1281169GT	DECAL,RECOVERY SWITCH	1
21	1281187GT	DECAL,EMERGENCY LOWERING,S-80 XC (S-80 XC/S-80 HF)	1
22	1283345GT	DECAL, COVER, XC XTRA CAPACITY	1
23	1283878GT	DECAL, TECHPRO LINK	1

107.1 Decals with Symbols, Hydraulic Tank Side, S-80 XC

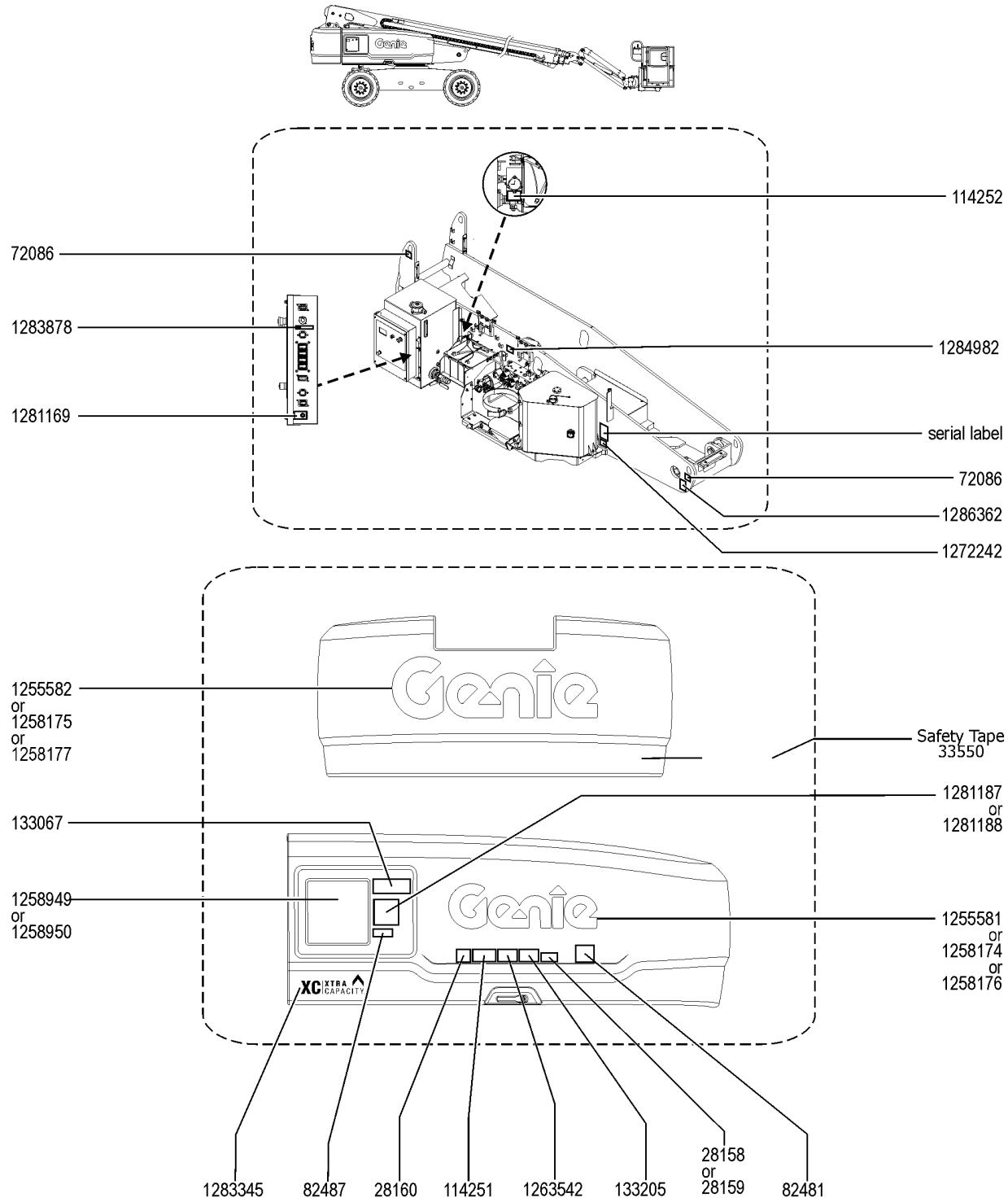

107.1 Decals with Symbols, Hydraulic Tank Side, S-80 XC

Item	*Part No.*	*Description*	*Qty.*
24	1284982GT	DECAL,ACCUMULATOR EXPLOSION HAZARD,SYMBOL	1
25	1286362GT	DECAL, BOOM SUPPORT, SYMBOL	1

107.2 Decals with Symbols, Hydraulic Tank Side, S-85 XC

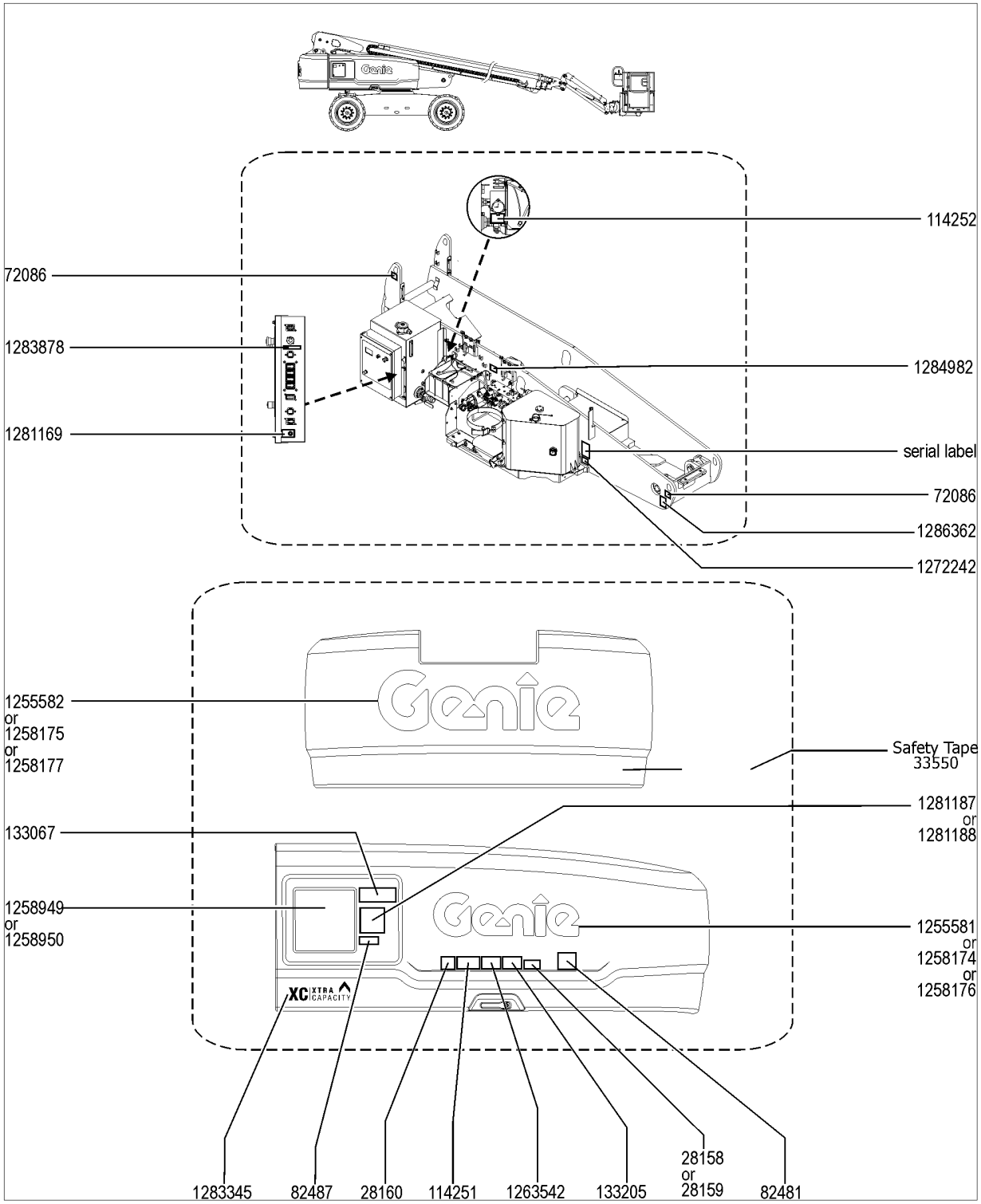

107.2 Decals with Symbols, Hydraulic Tank Side, S-85 XC

Item	Part No.	Description	Qty.
A	1302649GT	DECAL KIT,S-80/85 XC,COMP,SYMBOL,ANSI & CE	
B	1302648GT	INSTRUCTIONS,INSTALL,COMP,SYMBOL, S-80/85 XC	
C	1302650GT	INSTRUCTIONS,INSTALL,PLAT,SYMBOL, S-80/85 XC	
D	33550GT	TAPE,WARNING,BLK/YEL, 50'***	1 roll
1	28158GT	DECAL,LABEL,UNLEADED GAS ONLY Option, fuel	1
2	28159GT	DECAL,DIESEL Option, fuel	1
3	28160GT	DECAL,LABEL,LIQUID PROPANE Option, LPG Tank	1
4	72086GT	DECAL,LABEL,LIFTING EYE	2
5	82481GT	DECAL,SYMBOL-BATTERY SAFETY	1
6	82487GT	DECAL,SYMBOL-READ THE MANUAL	1
7	114251GT	DECAL,LABEL,NO SMOKING,SYMB	1
8	114252GT	DECAL,LABEL,TIP OVER LMT SWTCH	1
9	133067GT	DECAL,DANGER,ELEC.HAZ.STAY CLR	1
10	133205GT	DECAL,LABEL, ELECTRO HAZARD	1
11	1255581GT	DECAL COSMETIC,10" GENIE BLUE	1
12	1255582GT	DECAL COSMETIC,15" GENIE BLUE	1
13	1258174GT	DECAL COSMETIC,10" GENIE WHITE	1
14	1258175GT	DECAL COSMETIC,15" GENIE WHITE	1
15	1258176GT	DECAL COSMETIC,10" GENIE BLACK	1
16	1258177GT	DECAL COSMETIC,15" GENIE BLACK	1
17	1258949GT	OVERLAY GROUND CONTROLS S-BOOM JIB (S-85 XC, S-85 HF)	1
17B	1286638GT	KIT,GBOX OVERLAY,ALC600,S-BOOMS,JIB S-85 XC, S-85HF (includes 1258949)	
18	1263542GT	DECAL, COMPARTMENT ACCESS	1
19	1272242GT	DECAL,MACHINE REGISTRATION/OWN	1
20	1281169GT	DECAL,RECOVERY SWITCH	1
21	1281188GT	DECAL,EMERGENCY LOWERING (S-85 XC/S-85 HF)	1
22	1283345GT	DECAL, COVER, XC XTRA CAPACITY	1
23	1283878GT	DECAL, TECHPRO LINK	1

107.2 Decals with Symbols, Hydraulic Tank Side, S-85 XC

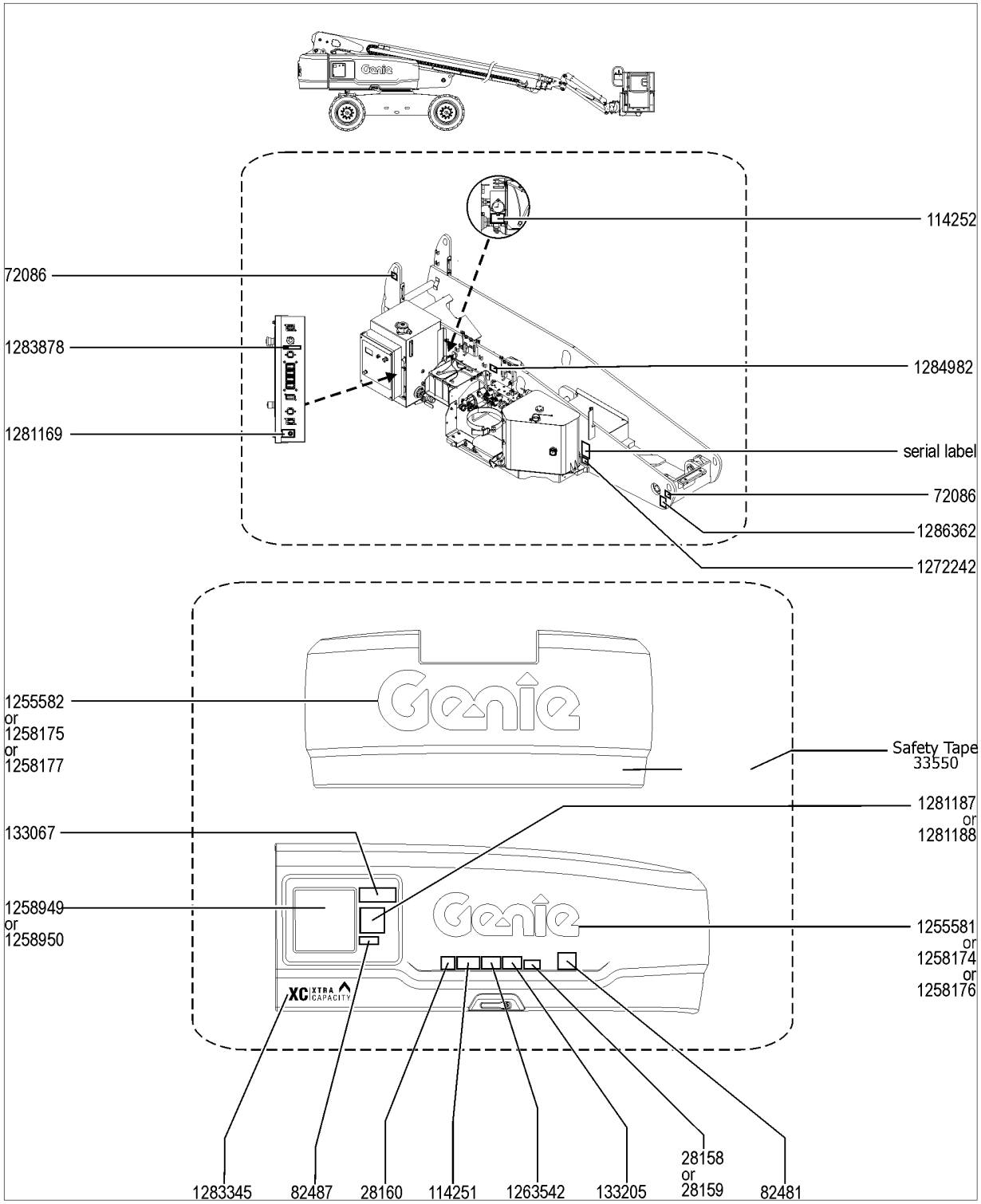

107.2 Decals with Symbols, Hydraulic Tank Side, S-85 XC

Item	*Part No.*	*Description*	*Qty.*
24	1284982GT	DECAL,ACCUMULATOR EXPLOSION HAZARD,SYMBOL	1
25	1286362GT	DECAL, BOOM SUPPORT, SYMBOL	1

108.1 Decals with Symbols, Chassis, S-80 XC

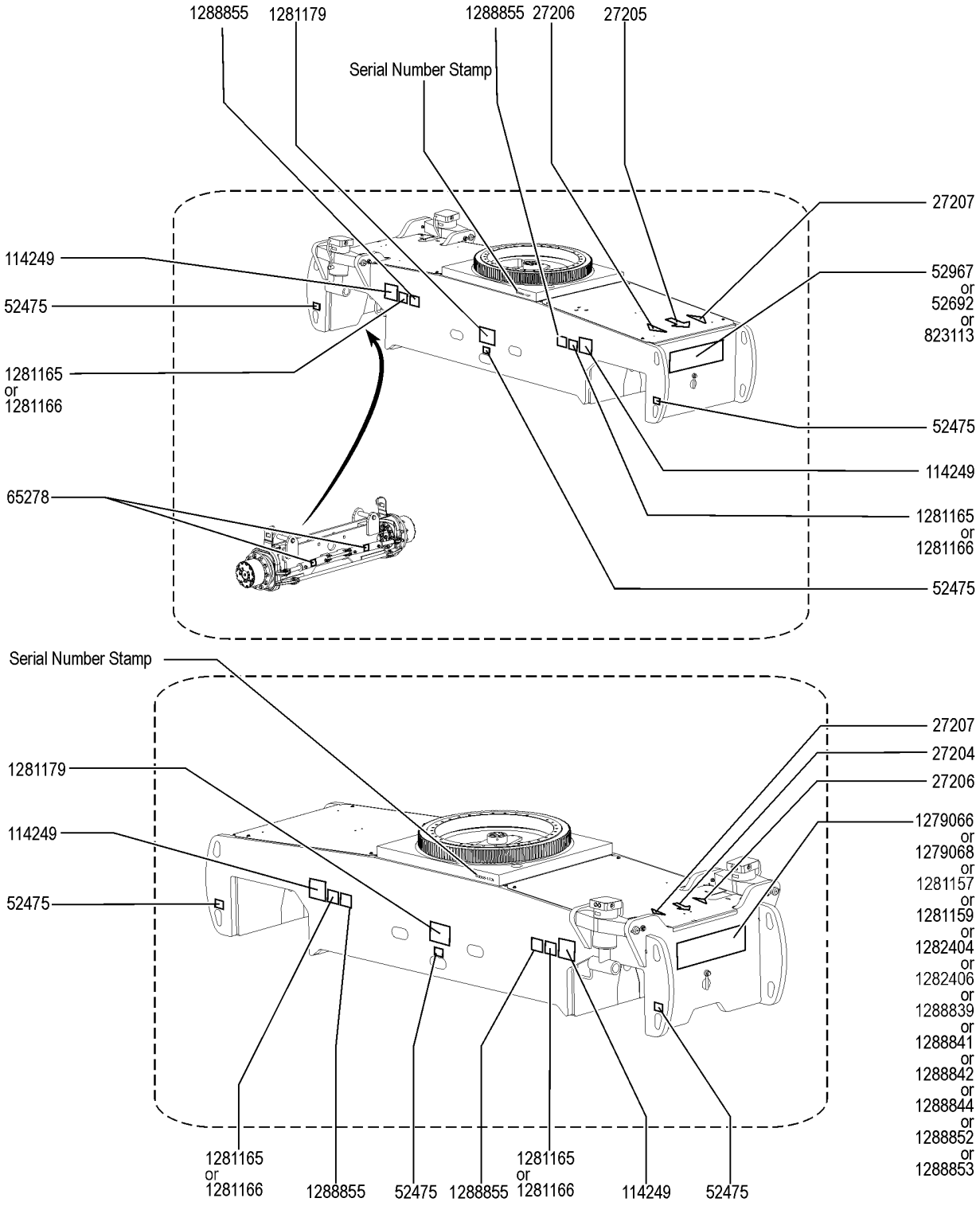

108.1 Decals with Symbols, Chassis, S-80 XC

Item	Part No.	Description	Qty.
1	27204GT	DECAL,ARROW BLUE	1
2	27205GT	DECAL,ARROW YELLOW LRG 9"	1
3	27206GT	DECAL,TRIANGLE,BLUE	2
4	27207GT	DECAL,TRIANGLE,YELLOW	2
5	52475GT	DECAL,LABEL,TRANSPORT TIEDOWN*	6
6	52692GT	DECAL,COSMETIC,4X4 BLUE	1
7	52967GT	DECAL,COSMETIC,4 X 4	1
8	65278GT	DECAL,CAUTION,NO STEP	2
9	114249GT	DECAL,LABEL,TIPOVER,TIRES,SYMB	4
10	823113GT	DECAL,COSM,4X4,BLACK	1
11	1279066GT	DECAL, CHASSIS, S-80 XC (S-80 XC)	1
12	1281157GT	DECAL, CHASSIS, S-80 XC, BLUE (S-80 XC)	1
13	1281165GT	DECAL,LABEL,WHEEL LOAD S80 XC (S-80 XC/S-80 HF)	4
14	1281179GT	DECAL,TRANSPORT/LIFTING, S-80/85 XC	2
15	1282406GT	DECAL, CHASSIS, S-80 XC, BLK (S-80 XC)	1
16	1288839GT	DECAL, CHASSIS, S-80 HF (S-80 HF)	1
17	1288842GT	DECAL, CHASSIS, S-80 HF, BLUE (S-80 HF)	1
18	1288853GT	DECAL, CHASSIS, S-80 HF, BLK (S-80 HF)	1
19	1288855GT	LABEL,TIRE PRESSURE,HF (High Flotation)	4

108.2 Decals with Symbols, Chassis, S-85 XC

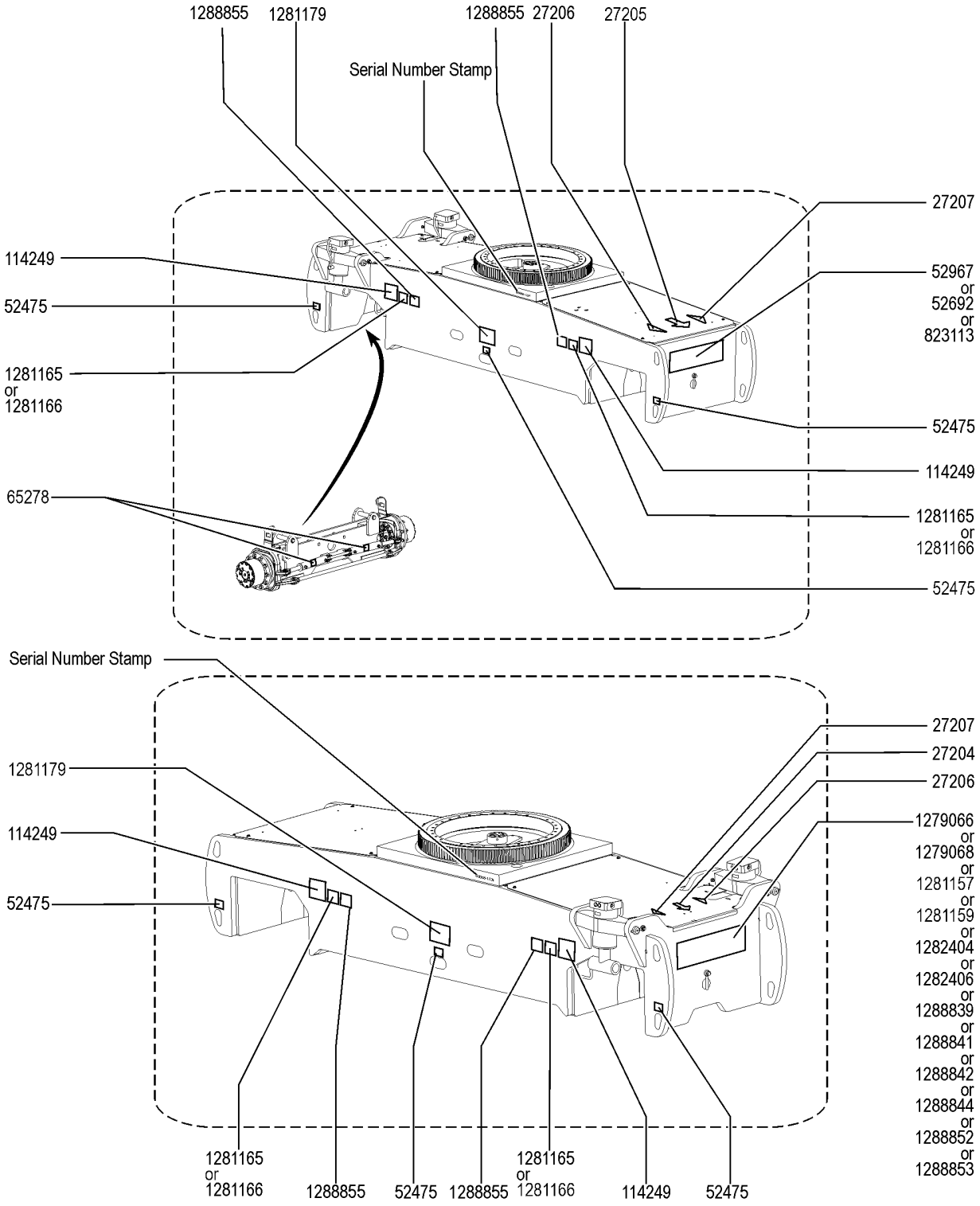

108.2 Decals with Symbols, Chassis, S-85 XC

Item	Part No.	Description	Qty.
1	27204GT	DECAL,ARROW BLUE	1
2	27205GT	DECAL,ARROW YELLOW LRG 9"	1
3	27206GT	DECAL,TRIANGLE,BLUE	2
4	27207GT	DECAL,TRIANGLE,YELLOW	2
5	52475GT	DECAL,LABEL,TRANSPORT TIEDOWN*	6
6	52692GT	DECAL,COSMETIC,4X4 BLUE	1
7	52967GT	DECAL,COSMETIC,4 X 4	1
8	65278GT	DECAL,CAUTION,NO STEP	2
9	114249GT	DECAL,LABEL,TIPOVER,TIRES,SYMB	4
10	823113GT	DECAL,COSM,4X4,BLACK	1
11	1279068GT	DECAL, CHASSIS, S-85 XC (S-85 XC)	1
12	1281159GT	DECAL, CHASSIS, S-85 XC, BLUE (S-85 XC)	1
13	1281166GT	DECAL,LABEL,WHEEL LOAD S85 XC (S-85 XC/S-85 HF)	4
14	1281179GT	DECAL,TRANSPORT/LIFTING, S-80/85 XC	2
15	1282404GT	DECAL, CHASSIS, S-85 XC, BLK (S-85 XC)	1
16	1288841GT	DECAL, CHASSIS, S-85 HF (S-85 HF)	1
17	1288844GT	DECAL, CHASSIS, S-85 HF, BLUE (S-85 HF)	1
18	1288852GT	DECAL, CHASSIS, S-85 HF, BLK (S-85 HF)	1

109.1 Decals with Symbols, Engine Side

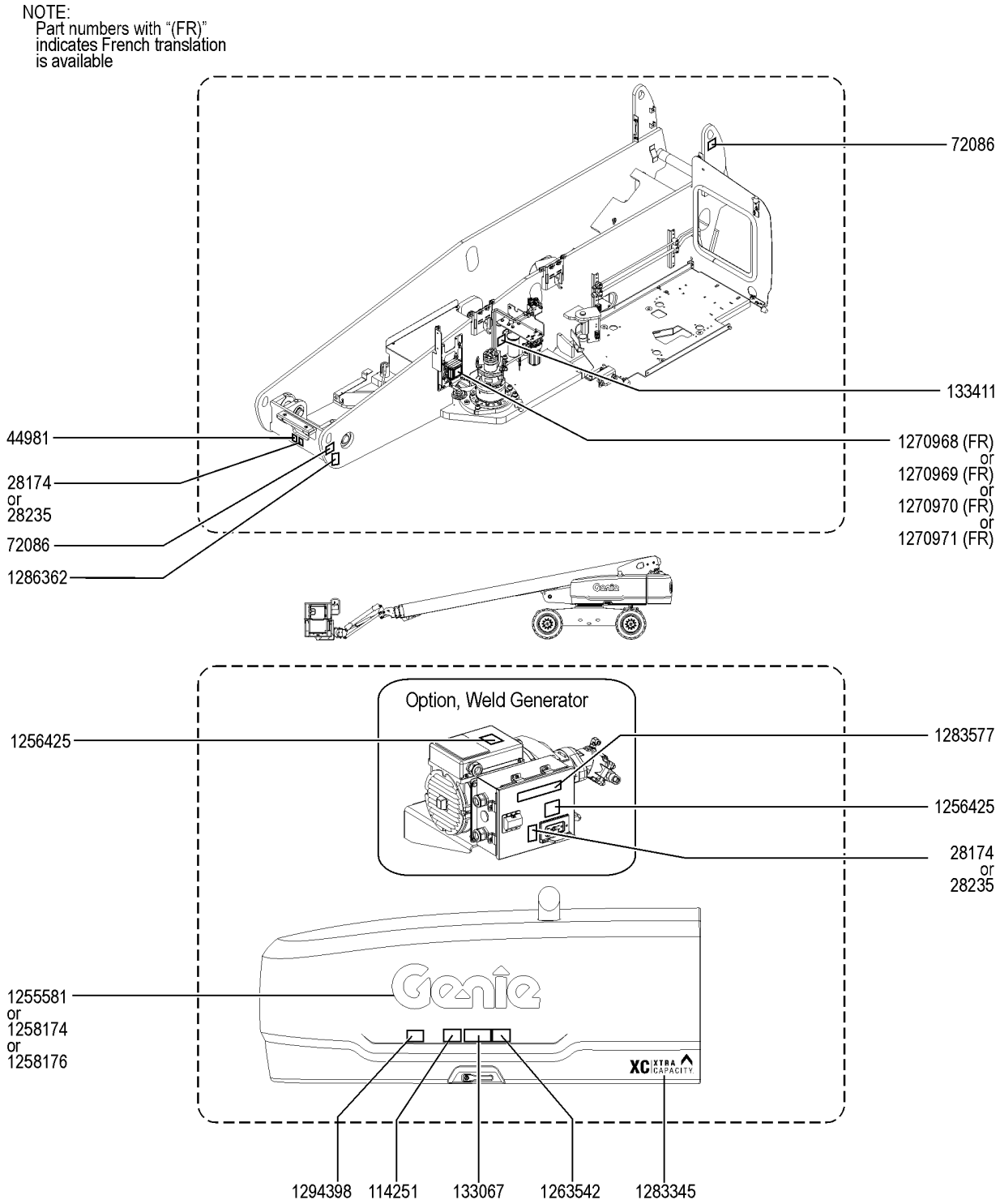

109.1 Decals with Symbols, Engine Side

Item	Part No.	Description	Qty.
1	28174GT	DECAL,POWER TO PLATFORM 230V Option, power to Plat	2
2	28235GT	DECAL,POWER TO PLATFORM 115V Option, power to Plat	2
3	44981GT	DECAL,LABEL,AIRLINE 110 PSI Option, airline to Plat	1
4	72086GT	DECAL,LABEL,LIFTING EYE	2
5	114251GT	DECAL,LABEL,NO SMOKING,SYMB	1
6	133067GT	DECAL,DANGER,ELEC.HAZ.STAY CLR	1
7	133411GT	DECAL,LABEL,106 DB*** (CE Only)	1
7B	1311624GT	LABEL,DECIBEL,109DB Stage V Only	1
8	1255581GT	DECAL COSMETIC,10" GENIE BLUE	1
9	1256425GT	DECAL, DANGER, ELECTROCUTION H Option, welder	2
10	1258174GT	DECAL COSMETIC,10" GENIE WHITE	1
11	1258176GT	DECAL COSMETIC,10" GENIE BLACK	1
12	1263542GT	DECAL, COMPARTMENT ACCESS	1
13	1270968GT	DECAL, VEC, PERKINS404D, S80 Perkins 404D-22T	1
14	1270969GT	DECAL, VEC, DEUTZ2.9T, S80 Deutz TD 2.9L4	1
15	1270970GT	DECAL, VEC, DEUTZ2011T, S80 Deutz TD2011L04i	1
16	1270971GT	DECAL, VEC, GM3.0, S80 GM 3.0L	1
17	1283345GT	DECAL, COVER, XC XTRA CAPACITY	1
18	1283577GT	DECAL, LIFT^POWER, 1X7 INCH Option, welder	1
19	1286362GT	DECAL, BOOM SUPPORT, SYMBOL	1

110.1 Decals with Symbols, Boom S-80 XC

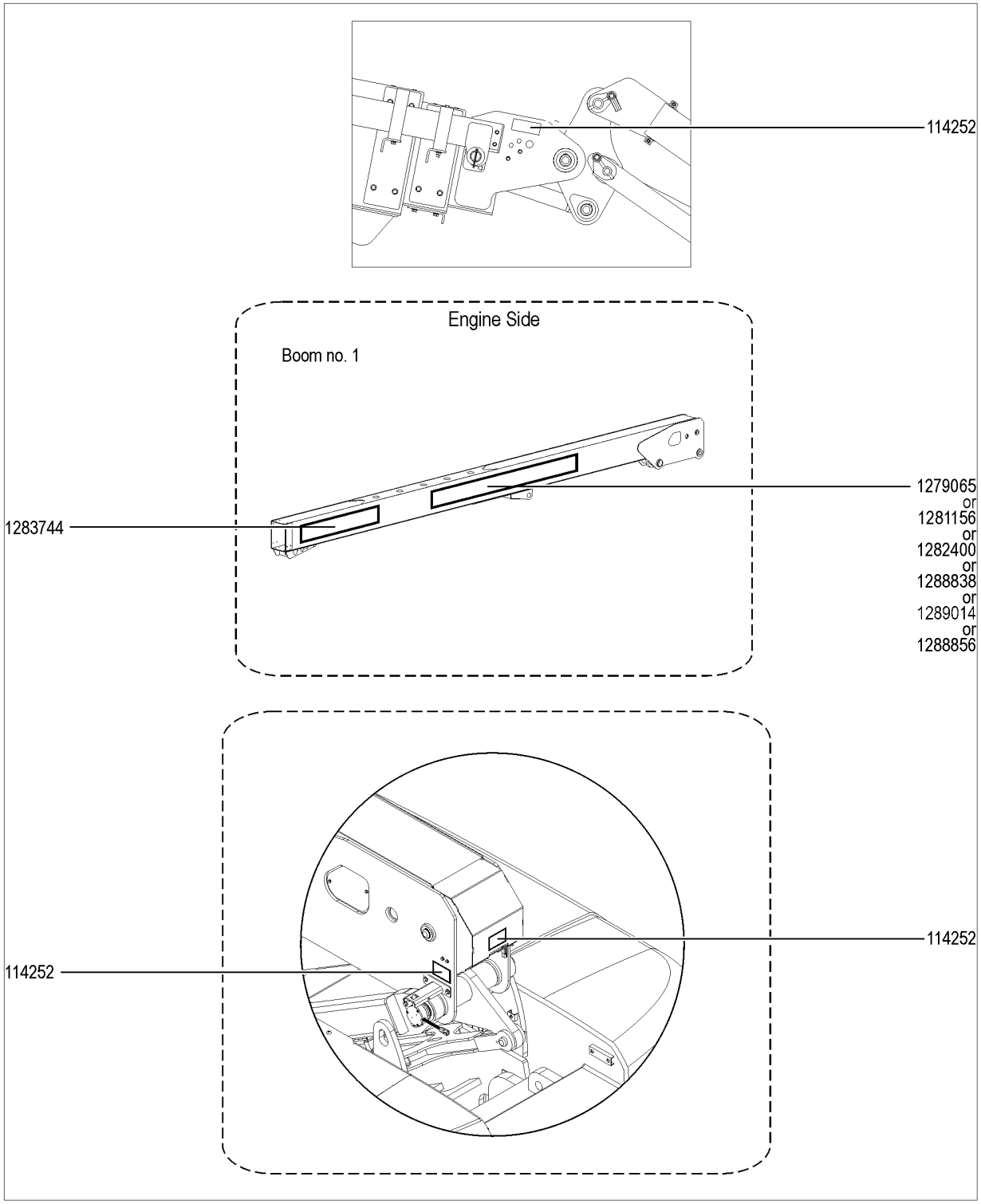

110.1 Decals with Symbols, Boom S-80 XC

Item	*Part No.*	*Description*	*Qty.*
1	114252GT	DECAL,LABEL,TIP OVER LMT SWTCH	3
2	1279065GT	DECAL, BOOM, GENIE S-80 XC (S-80 XC)	1
3	1281156GT	DECAL, BOOM, GENIE S-80 XC, BLUE (S-80 XC)	1
4	1282400GT	DECAL, BOOM, GENIE S-80 XC, BLK (S-80 XC)	1
5	1283744GT	DECAL, LIFT^POWER (Option, welder)	1
6	1288838GT	DECAL, BOOM, GENIE S-80 HF (S-80 HF)	1
7	1288856GT	DECAL, BOOM, GENIE S-80 HF, BLK (S-80 HF)	1
8	1289014GT	DECAL, BOOM, GENIE S-80 HF, BLUE (S-80 HF)	1

111.1 Decals with Symbols, Boom S-85 XC

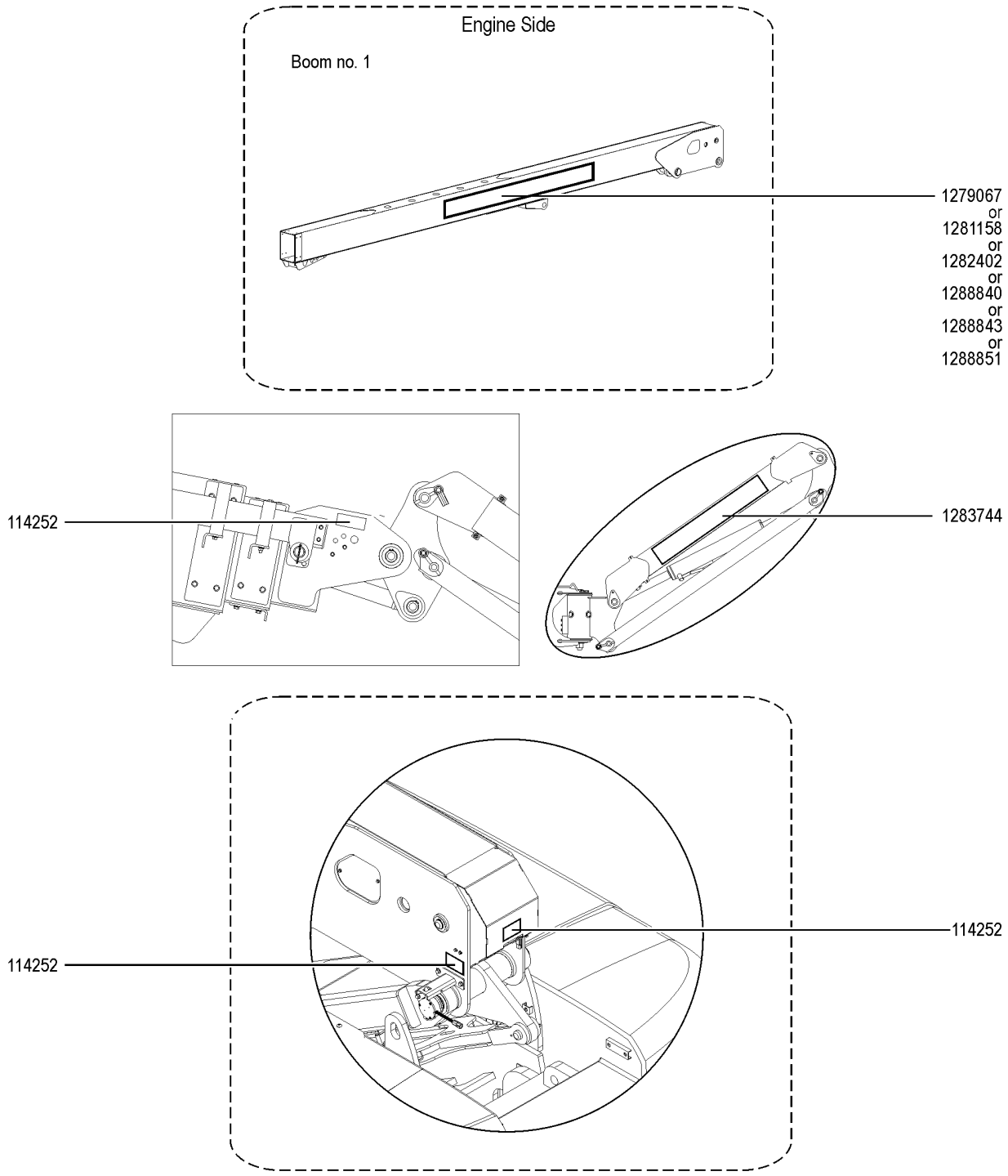

111.1 Decals with Symbols, Boom S-85 XC

Item	*Part No.*	*Description*	*Qty.*
1	114252GT	DECAL,LABEL,TIP OVER LMT SWTCH	3
2	1279067GT	DECAL, BOOM, GENIE S-85 XC (S-85 XC)	1
3	1281158GT	DECAL, BOOM, GENIE S-85 XC, BLUE (S-85 XC)	1
4	1282402GT	DECAL, BOOM, GENIE S-85 XC, BLK (S-85 XC)	1
5	1283744GT	DECAL, LIFT^POWER (Option, welder)	1
6	1288840GT	DECAL, BOOM, GENIE S-85 HF (S-85 HF)	1
7	1288843GT	DECAL, BOOM, GENIE S-85 HF, BLUE (S-85 HF)	1
8	1288851GT	DECAL, BOOM, GENIE S-85 HF, BLK (S-85 HF)	1

112.1 Decals with Symbols, Platform, S-80 XC

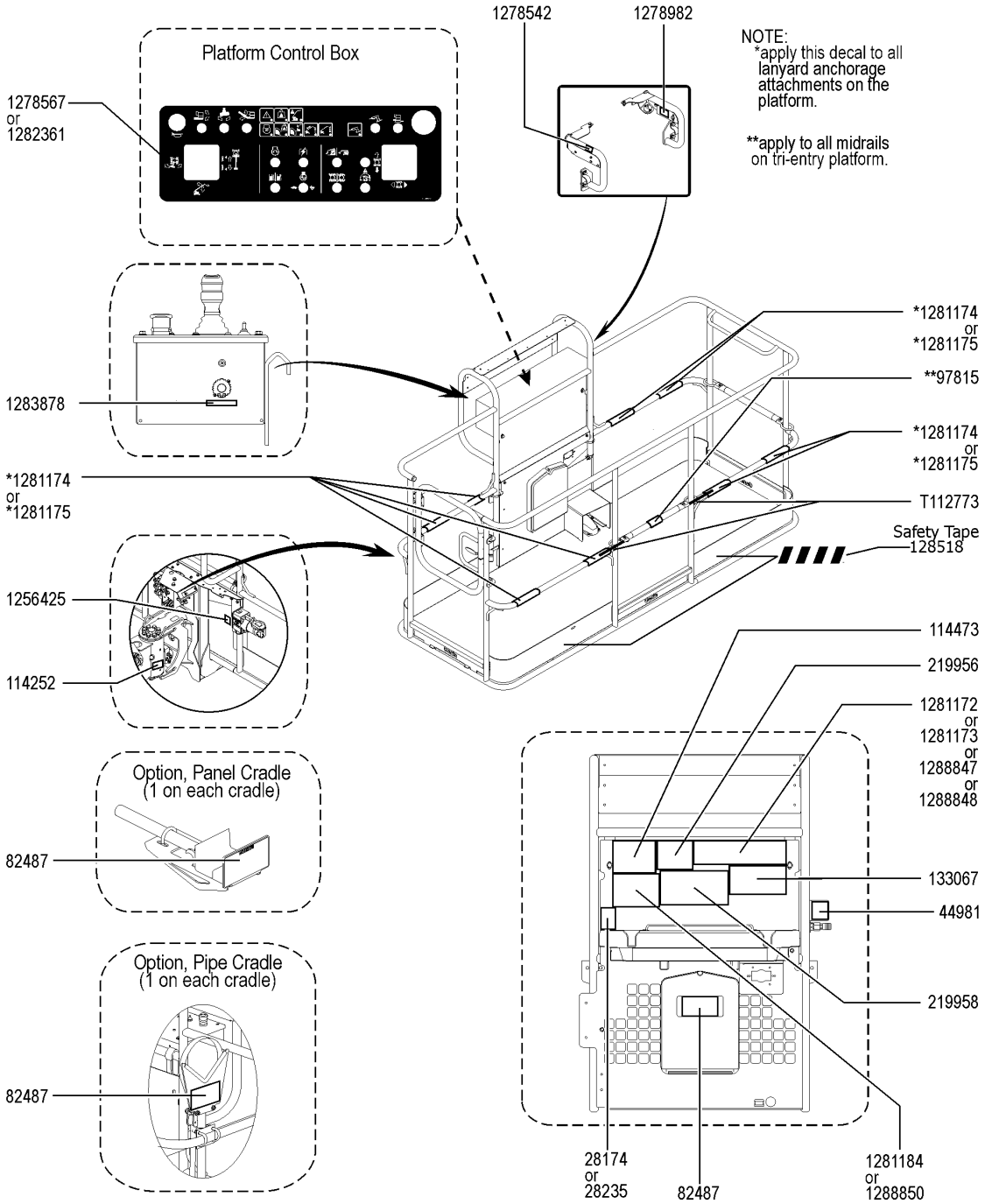

Item	Part No.	Description	Qty.
A	1302651GT	DECAL KIT,S-80/85 XC,PLAT,SYMBOL,ANSI & CE	
B	1302650GT	INSTRUCTIONS,INSTALL,PLAT,SYMBOL, S-80/85 XC	
C	33550GT	TAPE,WARNING,BLK/YEL, 50'***	
1	28174GT	DECAL,POWER TO PLATFORM 230V Option, Power to Plat	1
2	28235GT	DECAL,POWER TO PLATFORM 115V Option, Power to Plat	1
3	44981GT	DECAL,LABEL,AIRLINE 110 PSI Option, airline to plat	1
4	82487GT	DECAL,SYMBOL-READ THE MANUAL	1
5	97815GT	DECAL,LABEL,LOWER MIDRAIL	1
6	114252GT	DECAL,LABEL,TIP OVER LMT SWTCH	1
7	114473GT	DECAL,DANGER,TIPOVER,TILT,SYM	1
8	133067GT	DECAL,DANGER,ELEC.HAZ.STAY CLR	1
9	219956GT	DECAL,PLATFORM OVERLOAD	1
10	219958GT	DECAL,TIP-OVER,CRUSH	1
11	1256425GT	DECAL, DANGER, ELECTROCUTION H Option, welder	1
12	1278542GT	DECAL, INSTRUCTION, CONTACT ALARM	1
13	1278567GT	OVERLAY,PLATFORM CONTROLS,S-BOOM,XC	1
14	1278982GT	DECAL, INSTRUCTION, ACTUATOR SWITCH SOCKET	1
15	1281172GT	DECAL,DANGER,CAPICITY S-80 XC,SYMBOL (S-80 XC)	1
16	1281174GT	DECAL,LANYARD,FALL ARREST/FALL RESTRAINED (ANSI/CSA)	8
17	1281175GT	DECAL,LANYARD,FALL RESTRAINED (CE)	8
18	1281184GT	DECAL,WARNING,RUNAWAY MACHINE,SYMBOL (S-80 XC/S-85 XC)	1
19	1282361GT	DECAL,PROTECTOR,CLEAR,S-80/85 XC	1
20	1283878GT	DECAL, TECHPRO LINK	1
21	1288847GT	DECAL,DANGER,CAPICITY S-80 HF,SYMBOL (S-80 HF)	1
22	1288850GT	DECAL,WARNING,RUNAWAY MACHINE,S-80/85 HF,SYMBOL (S-80 HF/S-85 HF)	1
23	T112773GT	TAPE, PROTECTIVE MASK	2

112.2 Decals with Symbols, Platform, S-85 XC

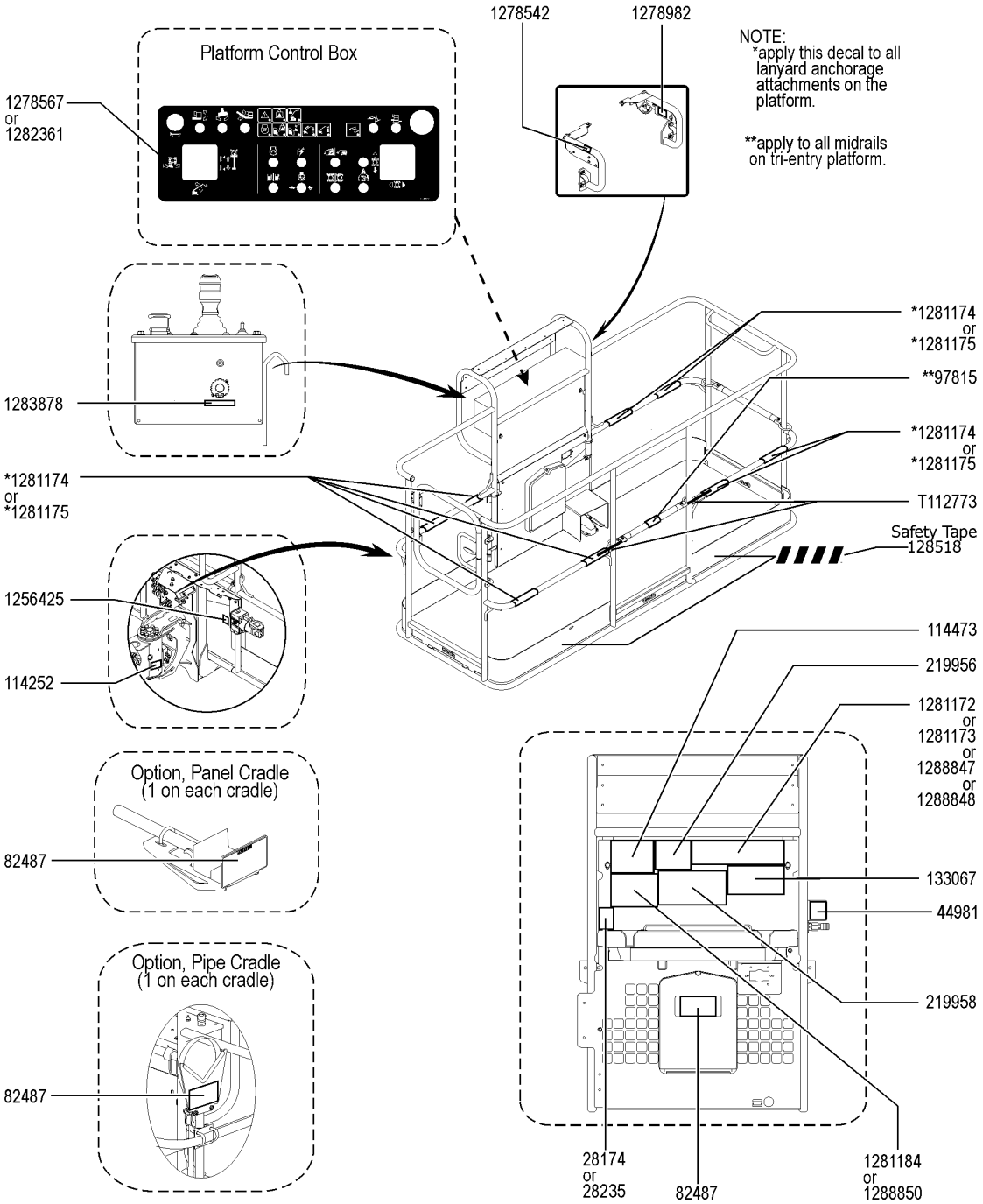

Item	Part No.	Description	Qty.
A	1302650GT	INSTRUCTIONS,INSTALL,PLAT,SYMBOL, S-80/85 XC	
B	1302651GT	DECAL KIT,S-80/85 XC,PLAT,SYMBOL,ANSI & CE	
C	33550GT	TAPE,WARNING,BLK/YEL, 50'***	
1	28174GT	DECAL,POWER TO PLATFORM 230V Option, Power to Plat	1
2	28235GT	DECAL,POWER TO PLATFORM 115V Option, Power to Plat	1
3	44981GT	DECAL,LABEL,AIRLINE 110 PSI Option, airline to plat	1
4	82487GT	DECAL,SYMBOL-READ THE MANUAL	1
5	97815GT	DECAL,LABEL,LOWER MIDRAIL	1
6	114252GT	DECAL,LABEL,TIP OVER LMT SWTCH	1
7	114473GT	DECAL,DANGER,TIPOVER,TILT,SYM	1
8	133067GT	DECAL,DANGER,ELEC.HAZ.STAY CLR	1
9	219956GT	DECAL,PLATFORM OVERLOAD	1
10	219958GT	DECAL,TIP-OVER,CRUSH	1
11	1256425GT	DECAL, DANGER, ELECTROCUTION H Option, welder	1
12	1278542GT	DECAL, INSTRUCTION, CONTACT ALARM	1
13	1278567GT	OVERLAY,PLATFORM CONTROLS,S-BOOM,XC	1
14	1278982GT	DECAL, INSTRUCTION, ACTUATOR SWITCH SOCKET	1
15	1281173GT	DECAL,DANGER,CAPICITY S-85 XC,SYMBOL (S-85 XC)	1
16	1281174GT	DECAL,LANYARD,FALL ARREST/FALL RESTRAINED (ANSI/CSA)	8
17	1281175GT	DECAL,LANYARD,FALL RESTRAINED (CE)	8
18	1281184GT	DECAL,WARNING,RUNAWAY MACHINE,SYMBOL (S-80 XC/S-85 XC)	1
19	1282361GT	DECAL,PROTECTOR,CLEAR,S-80/85 XC	1
20	1283878GT	DECAL, TECHPRO LINK	1
21	1288848GT	DECAL,DANGER,CAPICITY S-85 HF,SYMBOL (S-85 HF)	1
22	1288850GT	DECAL,WARNING,RUNAWAY MACHINE,S-80/85 HF,SYMBOL (S-80 HF/S-85 HF)	1
23	T112773GT	TAPE, PROTECTIVE MASK	2

201.1 Steer End

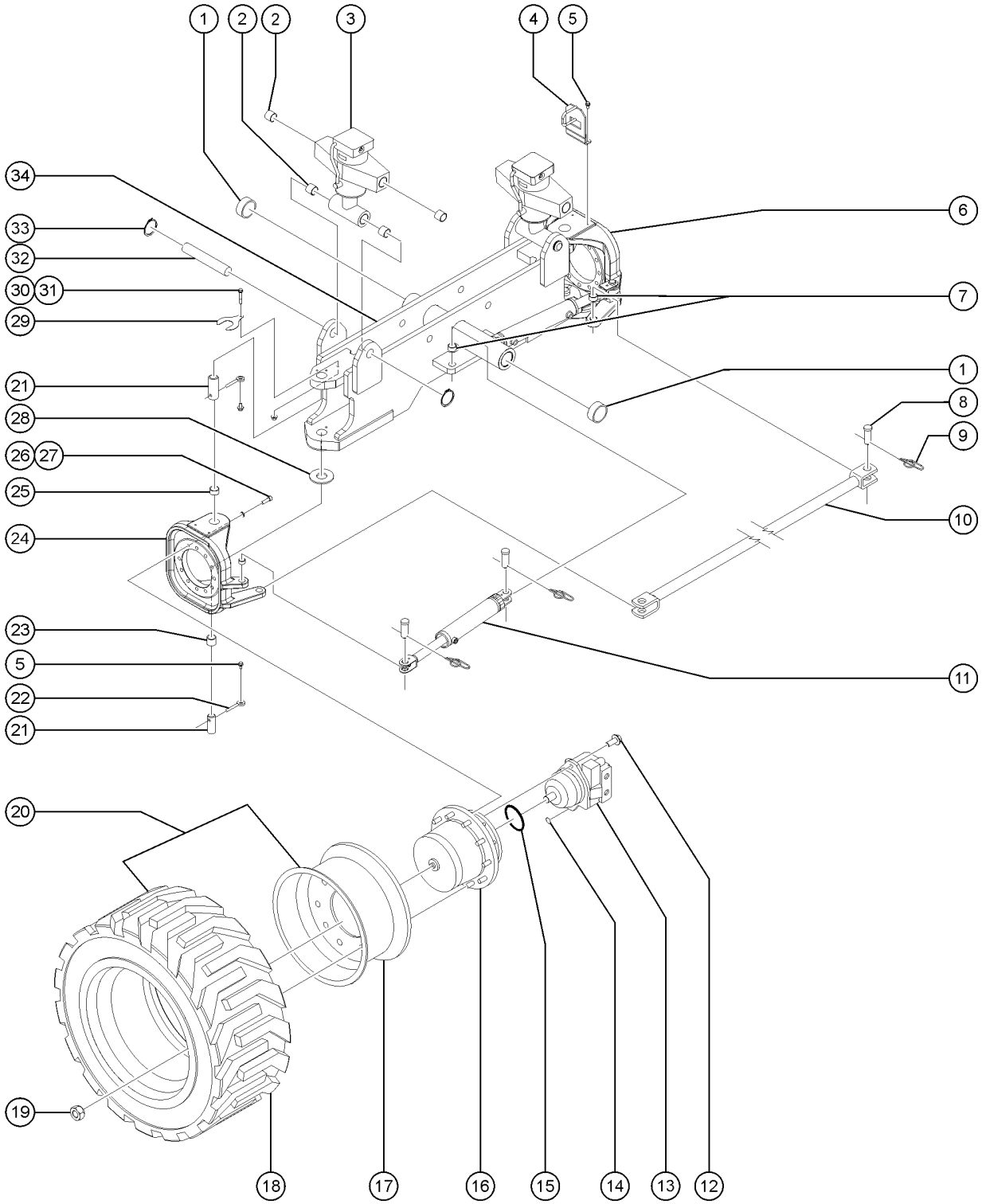

201.1 Steer End

Item	Part No.	Description	Qty.
1	27698GT	BEARING,2.50IDX2.75ODX2.00L	2
2	30221GT	BEARING,1.75IDX2.O0ODX1.50LG	8
3	81330GT	CYLINDER,OSCILLATE***	2
3-	33428GT	VALVE,COUNTERBALANCE	
3-	43018GT	SEAL KIT (39345)	
3-	77519GT	SEAL KIT,OSC CYLINDER (81330)*	
4	1311010GT	ASSEMBLY, GUIDE BRACKET, YOKE, NDL, TRAFFIC BLACK	2
5	824089GT	SCREW, HHF, 3/8-16 X .75, 8, ZAG	8
6	1269323GT	ASSY,S80YOKE,W/BEARINGS,RFLR,N	1
7	25817GT	BEARING,1.00IDX1.25ODX1.00L	6
8	824127GT	PIN,CLEVIS,1.0X2.41,SAE,ZAG	6
9	824129GT	RUE RING,1.0,ZAG	6
10	1268565GT	WELDMENT, TIE ROD, S80, NDL	1
11	59370GT	CYLINDER,STEER	2
11-	88349GT	SEAL KIT,STEER CYL***	
12	824134GT	SCREW,HHF,M12-1.75X30,DIN6921,10.9,ZAB	4
13	101070GT	MOTOR,PISTON,2 SPEED,45CC	2
13-	106098GT	SEAL KIT,MOTOR,LC/KC***	
14	106117GT	O-RING,2-010,VITON (Mating O-ring for Brake Port)(Extremely small)	2
15	106118GT	O-RING,2-157,VITON*** (Motor to Hub O-ring)	2
16	1275746GT	WHEEL DRIVE W/BRAKE, 71:1 (Refer to 204.1)	2
17	121268GT	WHEEL,24.5 X 15.00 for 227804, 227805, 227985, 228805, 121286, 121287, 121271, 121272	
17B	121270GT	WHEEL,HF,22.5 X 14.00 for 1286371, 1286507	
18	101943GT	TIRE,18-625,16 PLY RT HBR,N-M for 227985, 228805,121271,121272	
18B	88261GT	TIRE,18-625,16 PLY,RT HBR for 227804, 227805,121286,121287	
18C	1286372GT	TIRE,41/18LLX22.5,20PR,TURF for 1286371, 1286507	
19	1259931GT	NUT,LUG,3/4-16 X 7/8 RADIUS,ZA	44
20	121286GT	TIRE & WHEEL ASSY,RT LP FOAM,L RT, Foam-filled, left (11 holes)	1

201.1 Steer End

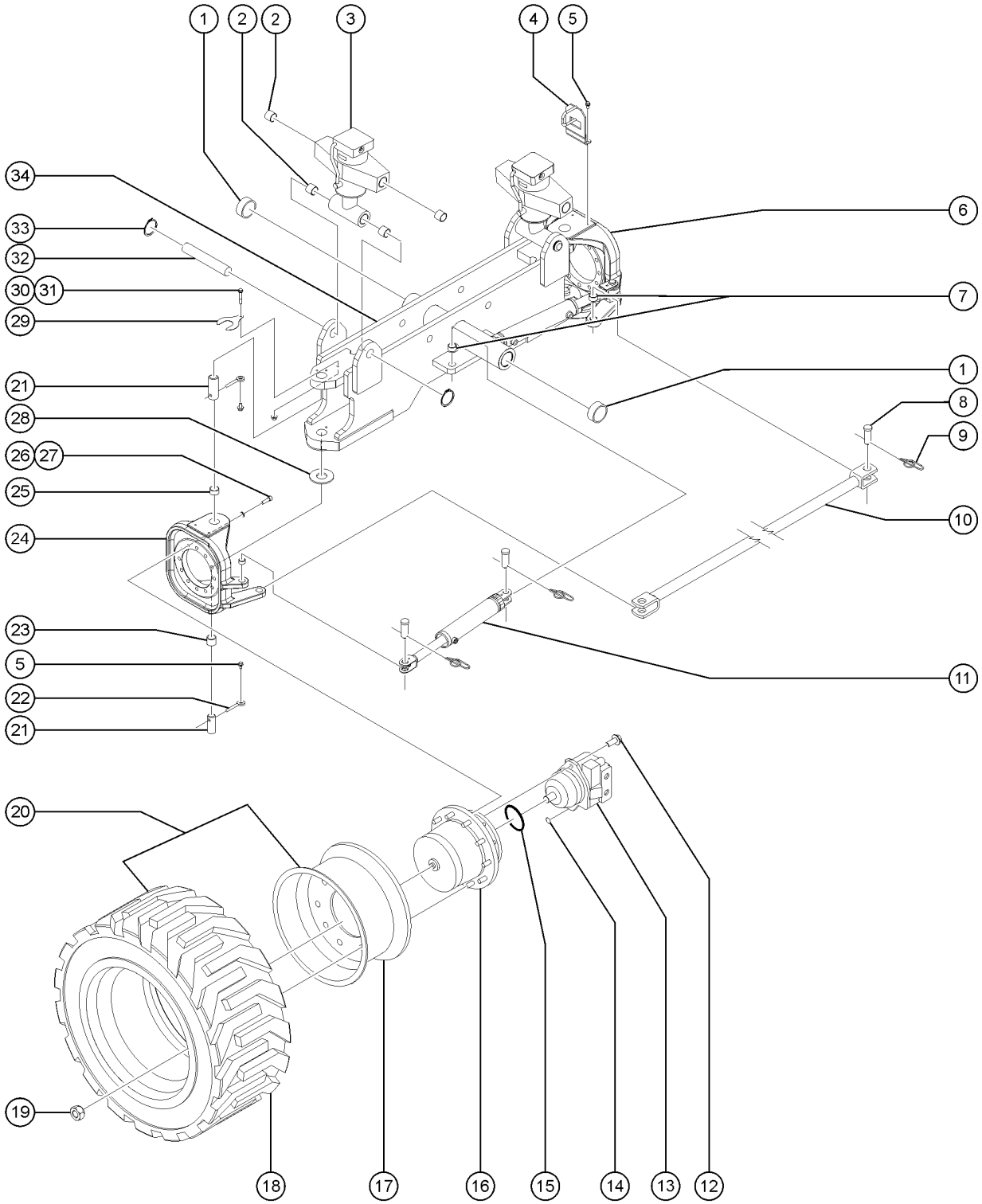

Item	Part No.	Description	Qty.
20B	121287GT	TIRE & WHEEL ASSY,RT LP FOAM,R RT, Foam-filled, right (11 holes)	
20C	121271GT	TIRE & WHEEL ASSY,FOAM NM,LH RT, Foam-filled, Non-marking, left	
20D	121272GT	TIRE & WHEEL ASSY,FOAM NM,RH RT, Foam-filled, Non-marking, right	
20E	1286371GT	ASSEMBLY,WHEEL/TIRE,HF,20PR	
20F	1286507GT	ASSEMBLY,WHEEL/TIRE,HF,20PR W/SEALANT	
20G	227804GT	TIRE & WHEEL ASSY,RT LP FOAM,L RT, Foam-filled RNU, left	
20H	227805GT	TIRE & WHEEL ASSY,RT LP FOAM,R RT, Foam-filled RNU, right	
20K	227985GT	TIRE & WHEEL ASSY,FOAM, NM,LH RT, Foam-filled RNU, Non-marking, left	
20L	228805GT	TIRE & WHEEL ASSY,FOAM NM,RH RT, Foam-filled RNU, Non-marking, right	
21	30199GT	PIN,1.75 DIAX4.50LG,THREADED	4
22	825019GT	ROD END, .375X3.69, ZAG	4
23	119620GT	BEARING,1.75IDX2.00ODX1.50L	2
24	1269321GT	ASSY,S80 YOKE W/BEARINGS,L,NDL	1
25	51144GT	BEARING,1.75IDX2.00ODX1.25L	2
26	1269593GT	SCREW,SHC,M16-2.0X55,DIN912,12.9,ZAB	24
27	825348GT	WASHER,FLAT,M16,DIN6916,HRD,ZAB	24
28	60555GT	WASHER,THRUST 5 X 1.81 BRON	2
29	88241GT	SHIM,GALVANIZED STEER YOKE	2
30	1256856GT	SCREW,HHF,3/8-16X2.5,8,ZAG	2
31	1274322GT	NUT,NYLOCK FLG,3/8-16,F,ZAG	2
32	121371GT	PIN,1.75DIA X 10.50LG,2 RING	2
33	825759GT	SNAP RING,EXTERNAL,1.75,ZAG	4
34	1269322GT	ASSY,STEER AXLE,W/BEARINGS,NDL	1

202.1 Axle Installation

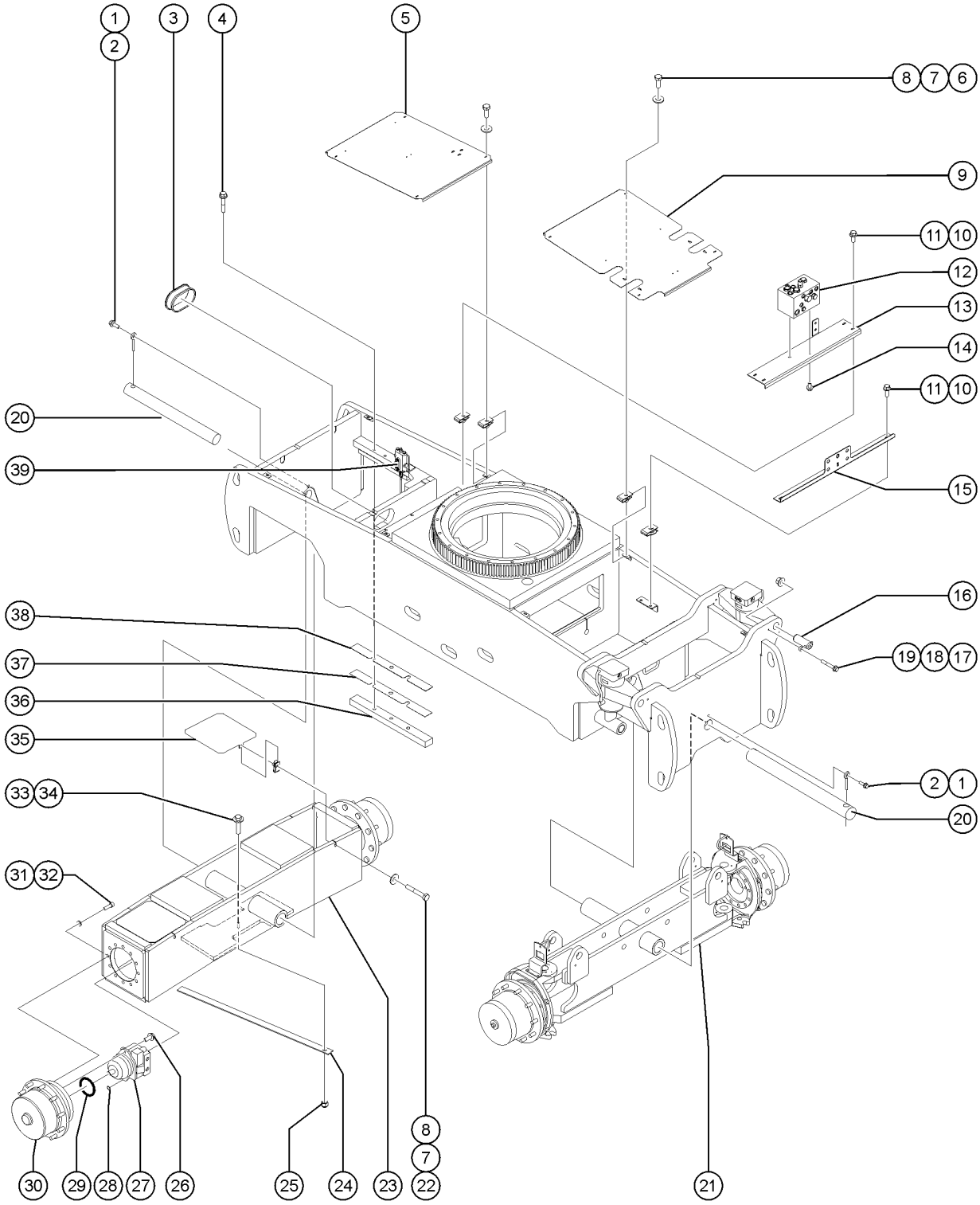

Item	Part No.	Description	Qty.
1	1253498GT	SCREW,HHF,1/2-13X1.5,8,ZAG	2
2	1256267GT	ROD END,.5 X 3.75,ZAG	2
3	53387GT	GUARD, HOSE PROTECTOR	2
4	1255802GT	SCREW,HHF,1/2-13X2.5,8,ZAG	6
5	1268568GT	COVER, DRIVE CHASSIS, REAR,NDL	1
6	824059GT	SCREW, HHC, 1/4-20 X .75, 8, ZAG	8
7	824113GT	WASHER,FLAT,USS,1/4,ZAG	12
8	56912GT	SPRING CLIP,1/4-20,.025-.15X.54,ZAG	12
9	1268569GT	COVER, DRIVE CHASSIS, FRONT,ND	1
10	824090GT	SCREW,HHF,3/8-16X1,8,ZAG	6
11	29868GT	SPRING CLIP,3/8-16,.05-.20X.73,ZAG	6
12		REF. TRACTION MANIFOLD (refer to 701.1)	
13	1268570GT	FORMING, TRAC. CONT. MAN. BRKT	1
14	237830GT	SCREW,HHF,1/2-13X1,8,ZAG	2
15	1268571GT	FORMING, BULKHEAD BRKT, NDL	1
16	81498GT	PIN,1.75DIAX4.50LG,THREADED	4
17	1256856GT	SCREW,HHF,3/8-16X2.5,8,ZAG	4
18	825019GT	ROD END, .375X3.69, ZAG	4
19	1274322GT	NUT,NYLOCK FLG,3/8-16,F,ZAG	4
20	81378GT	PIN,2.50DIAX27.63LG,1HOLE	2
21		REF. STEER END (refer to 201.1)	
22	824063GT	SCREW,HHC,1/4-20X1.75,8,ZAG	4
23	1269319GT	ASSY,NON-STEER AXLE W/BEARINGS	1
23-	27698GT	BEARING,2.50IDX2.75ODX2.00L	2
24	107578GT	GROUND STRAP,24"LONG (Option with Non-Marking tire.) (from SN S80XCH-3145, from SN S85XCH-3123)	1
25	6198GT	NUT, NYLOCK, 1/2-13 (Option with Non-Marking tire.) (from SN S80XCH-3145, from SN S85XCH-3123)	1
26	824134GT	SCREW,HHF,M12-1.75X30,DIN6921,10.9,ZAB	4
27	101070GT	MOTOR,PISTON,2 SPEED,45CC	2

202.1 Axle Installation

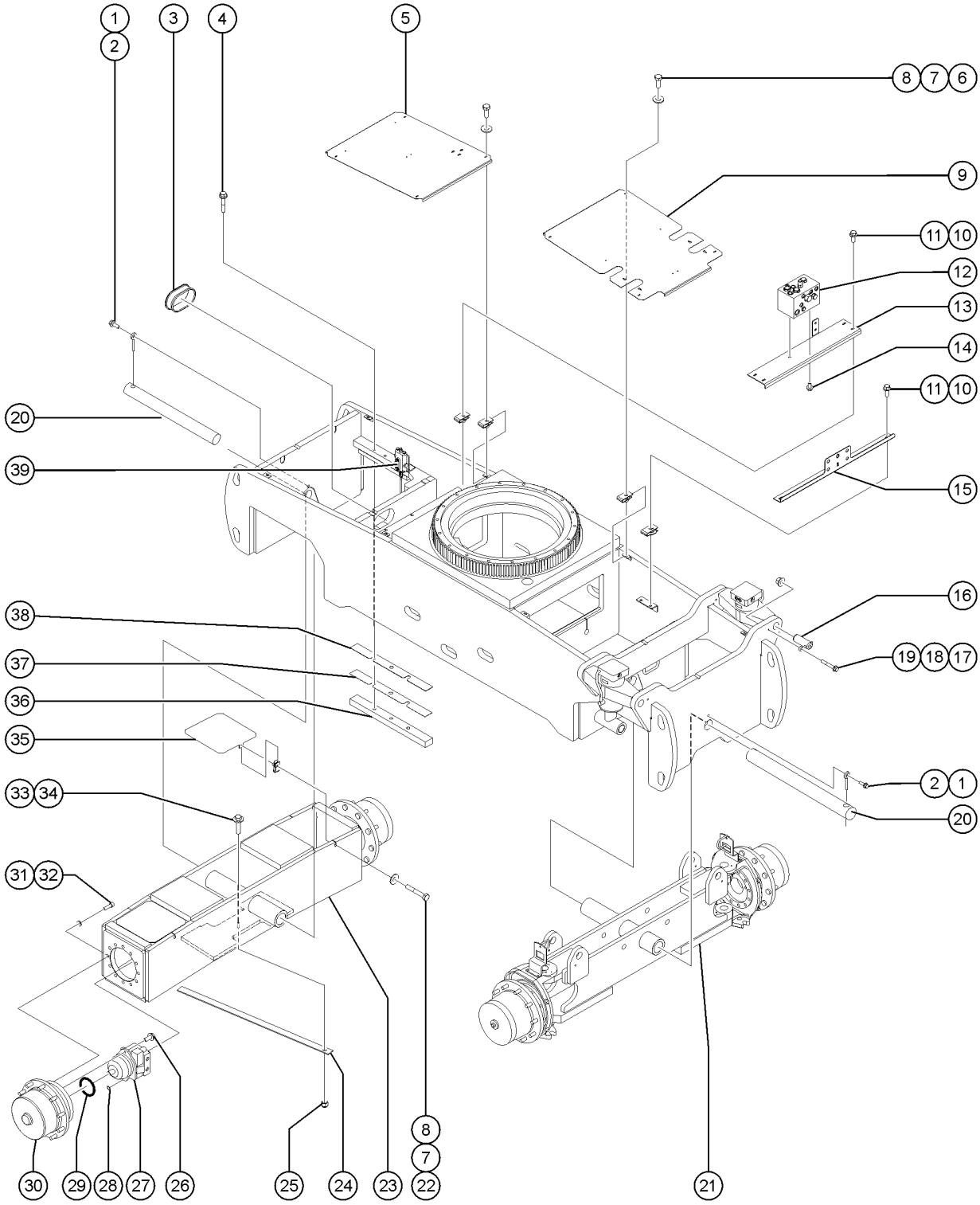

Item	Part No.	Description	Qty.
28	106117GT	O-RING,2-010,VITON (Mating O-ring for Brake Port)(Extremely small)	2
29	106118GT	O-RING,2-157,VITON*** (Motor to Hub O-ring)	2
30	1275746GT	WHEEL DRIVE W/BRAKE, 71:1 (refer to 204.1)	2
31	1269593GT	SCREW,SHC,M16-2.0X55,DIN912,12.9,ZAB	24
32	825348GT	WASHER,FLAT,M16,DIN6916,HRD,ZAB	24
33	104235GT	SCREW,HHC,1/2-13X2.25 GRD 8 (Option with Non-Marking tire.) (from SN S80XCH-3145, from SN S85XCH-3123)	1
34	6095GT	WASHER,FLAT,USS,1/2",Y (Option with Non-Marking tire.) (from SN S80XCH-3145, from SN S85XCH-3123)	1
35	1310986GT	ASSEMBLY, COVER, REAR AXLE, TRAFFIC BLACK	2
36	88092GT	BAR,AXLE ROTATION STOP,OSC.	2
37	81609GT	SHIM,AXLE ROTATION STOP,22G	2
38	81610GT	SHIM,AXLE ROTATION STOP,16G	2
39		REF. OSCILLATION CONTROL VALVE (refer to 203.1)	

203.1 Oscillation Control Valve

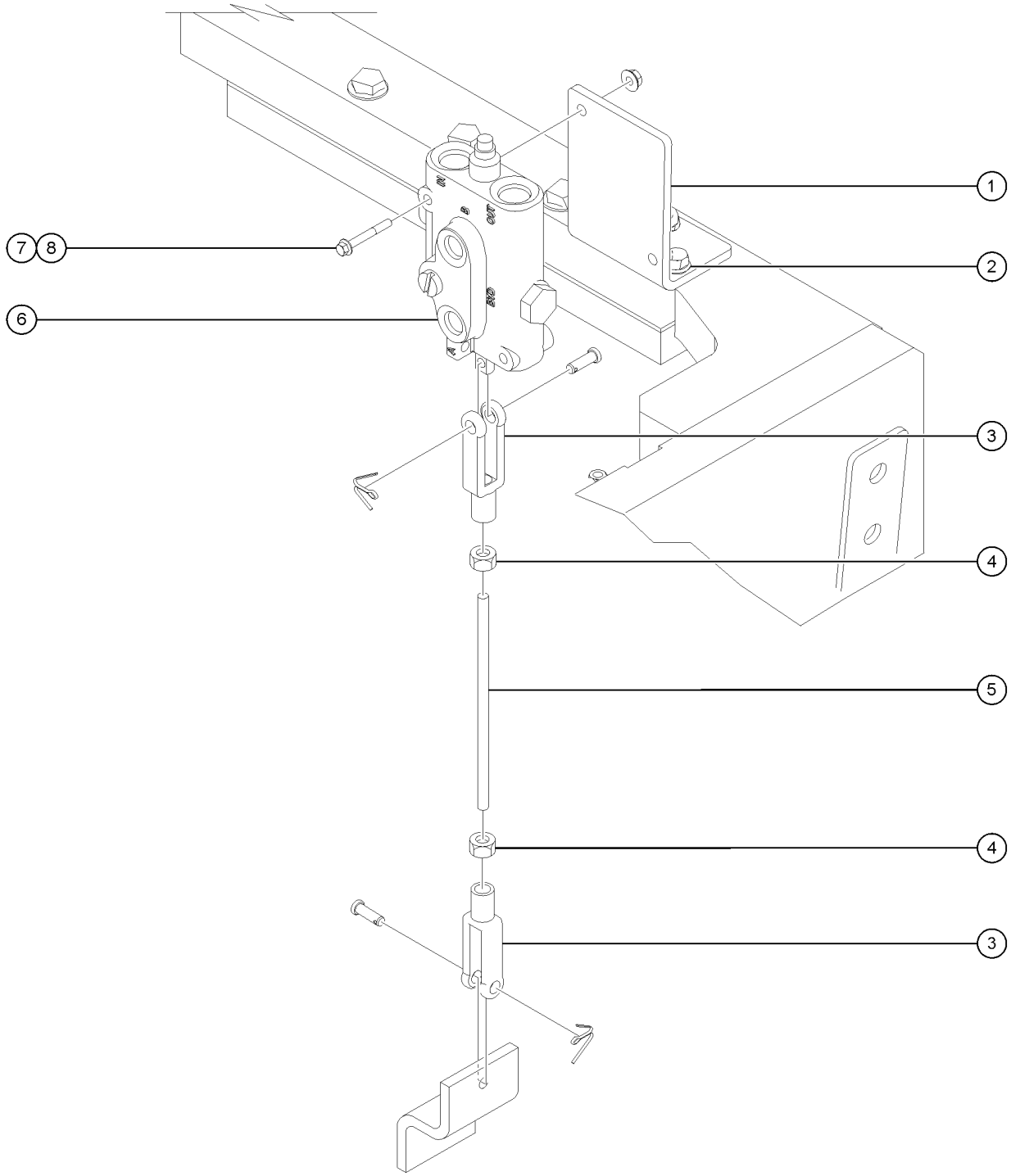

Item	*Part No.*	*Description*	*Qty.*
1	1268575GT	FORMING, OSC. MANIFOLD MOUNT,N	1
2	824089GT	SCREW, HHF, 3/8-16 X .75, 8, ZAG	2
3	21130GT	CLEVIS YOKE-1/4-28,PLTD W/PIN (Includes clevis pin and cotter pin)	2
4	824041GT	NUT, 1/4-28, 8, ZAG	2
5	1268606GT	ROD,THREADED,1/4-28X6,ZAG	1
6	49768GT	VLV,MAN,3 POS/4 WAY,CLOSE CTR*	1
7	1253485GT	SCREW,HHF,1/4-20X2,8,ZAG	2
8	824027GT	NUT, TL FLG, 1/4-20, G, ZAG	2

204.1 Drive Hub Assembly with Brake

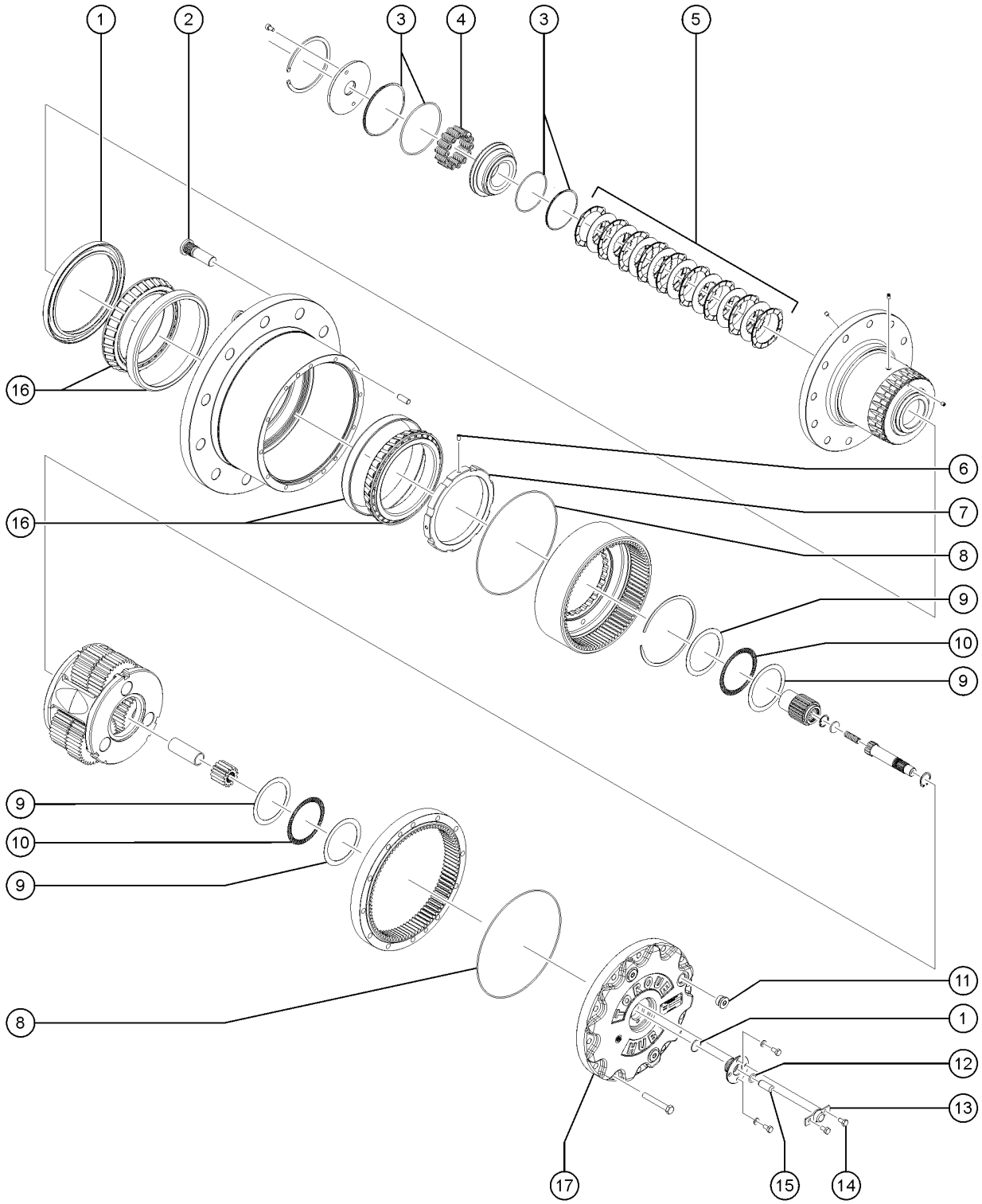

Item	Part No.	Description	Qty.
-	1275746GT	WHEEL DRIVE W/BRAKE, 71:1	
1	T111507GT	SEAL KIT (121291)*** Includes items 8 and 12	1
2	33441GT	STUD,WHEEL,3/4-16, (34115)	11
3	106125GT	SEAL KIT, BRAKE, 4HP (inventory limited to stock on hand as component is no longer available), replace by 1286602GT	
3B	1286602GT	SEAL KIT,WHEEL DRIVE W/BRAKE (101584/101585)	
4	122879GT	SPRING KIT (121291)	1
5	122878GT	BRAKE LINING KIT (121291)	1
6	146052GT	SET SCREW***	1
7	146051GT	BEARING NUT***	1
8	33990GT	O-RING, TORQUE HUB COVER	1
-	1300827GT	TORQUE HUB CAP SEAL (1275746)	1
9	58999GT	WASHER,THRUST,(33434)**	4
10	65846GT	BEARING,THRUST WASHER***	2
11	58237GT	PLUG,TORQUE HUB,DRAIN***	3
12	111363GT	O-RING,DISCONNECT ROD (111060) (component of seal kit T111507)	1
13	106122GT	CAP,DISENGAGE,4HP/4HB***	1
14	235154GT	BOLT,HEX-UNC(.250-20, .500G)	4
15	235152GT	DISENGAGE, ROD	1
16	235137GT	BEARING, TAPERED - ASSY	2
17	1298746GT	TORQUE HUB END CAP (1275746)	2

301.1 Hydraulic and Fuel Tanks - Diesel Models

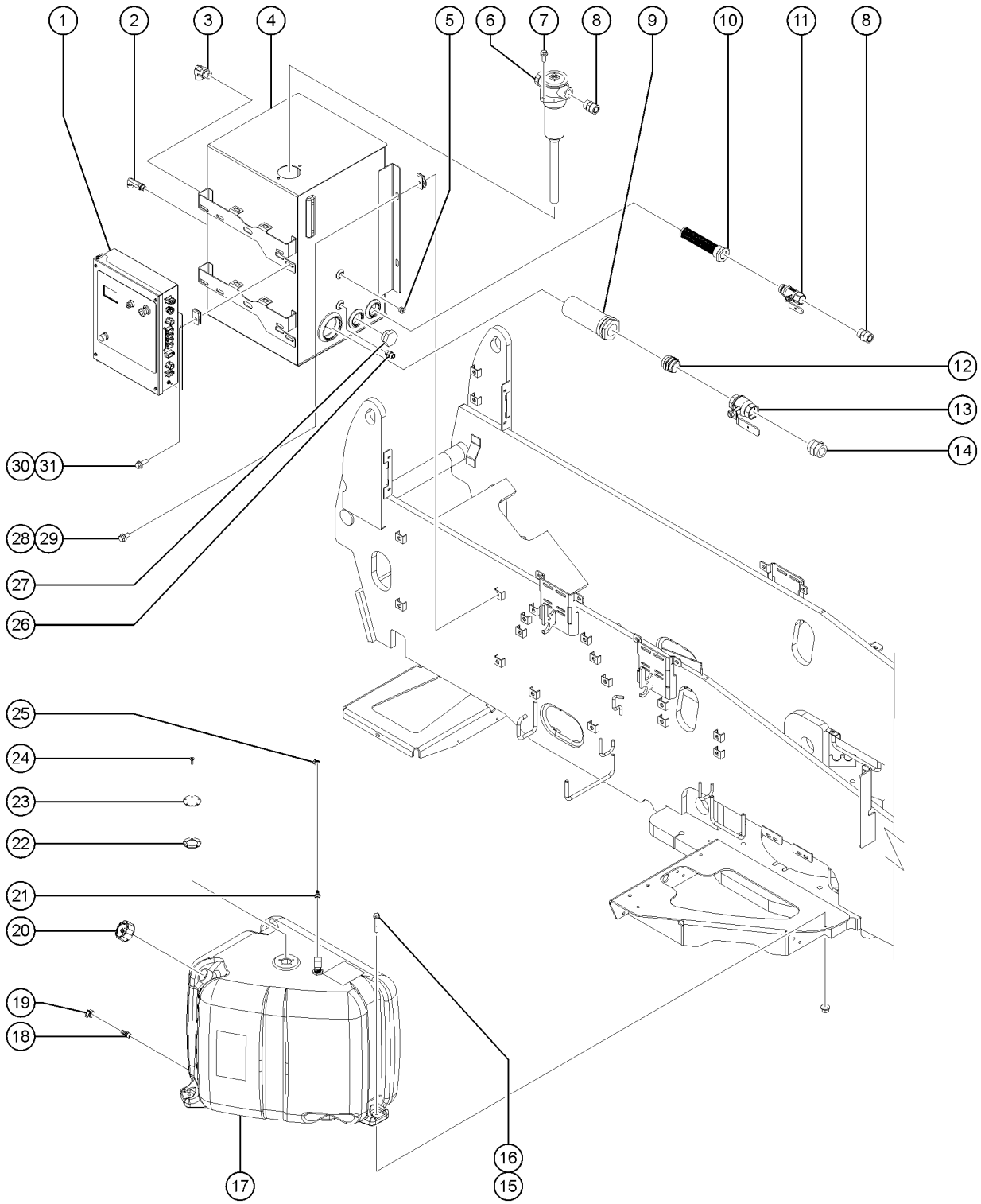

Item	Part No.	Description	Qty.
A	1289561GT	BRACKET, TELEMATICS	
B	1289520GT	MODULE, TELEMATICS, ZTR, M7, NORTH AMERICA to SN S85XCH-4690	
C	1313592GT	MODULE, ASSY,TELEMATICS, ZTR, M7, GLOBAL from SN S85XCH-4691	
D	1289521GT	MODULE, TELEMATICS, ZTR, M7, EMEA/APAC	
1		REF. GROUND CONTROL BOX (refer to 308.1 and 309.1)	1
2	75614GT	ELBOW,90D,LONG,521520-8	1
3	48959GT	FITTING,ELBOW,90D,520220-12	1
4	1281718GT	TANK, HYDRAULIC 40 GAL	1
4-	21141GT	GAUGE-SIGHT,LHA-LGTB***	1
5	59371GT	PLUG, HEX SOCKET, 090109B-8*	1
6	1281808GT	FILTER ASSY, INTANK, 49GPM	1
6-	1317967GT	SEAL KIT, FILTER ASSY - INTANK, 49GPM	1
6-	1283103GT	KIT, FILTER ELEMENT, HYD TANK RETURN	
6-	1282117GT	FILTER,ELEMENT,HYD TANK,RETURN	
7	824090GT	SCREW,HHF,3/8-16X1,8,ZAG	2
8	48984GT	CONN, 520120-16	2
9	75257GT	STRAINER ASSY,#24 O-RING	1
10	147419GT	KIT,STRAINER REPLACEMENT	1
11	48996GT	VALVE,BALL,16 MSAE-16 FSAE***	1
12	75254GT	UNION,STR.THREAD 24***	1
13	75256GT	VALVE BALL,24 FSAE-24 FSAE***	1
14	61083GT	CONN,520120-24	1
15	1253478GT	SCREW,HHF,3/8-16X2,8,ZAG	3
16	1274322GT	NUT,NYLOCK FLG,3/8-16,F,ZAG	3
17	1274249GT	ASSY,FUEL TANK, 35 GAL, PLASTIC FS	
17B	1274331GT	ASSY, FUEL TANK, 35GAL, DIESEL	1
17B-	54324GT	FITTING,BULKHEAD,3/8NPT,FUELTK	
17B-	1271770GT	SENSOR, FUEL LEVEL, 30" DIESEL	

301.1 Hydraulic and Fuel Tanks - Diesel Models

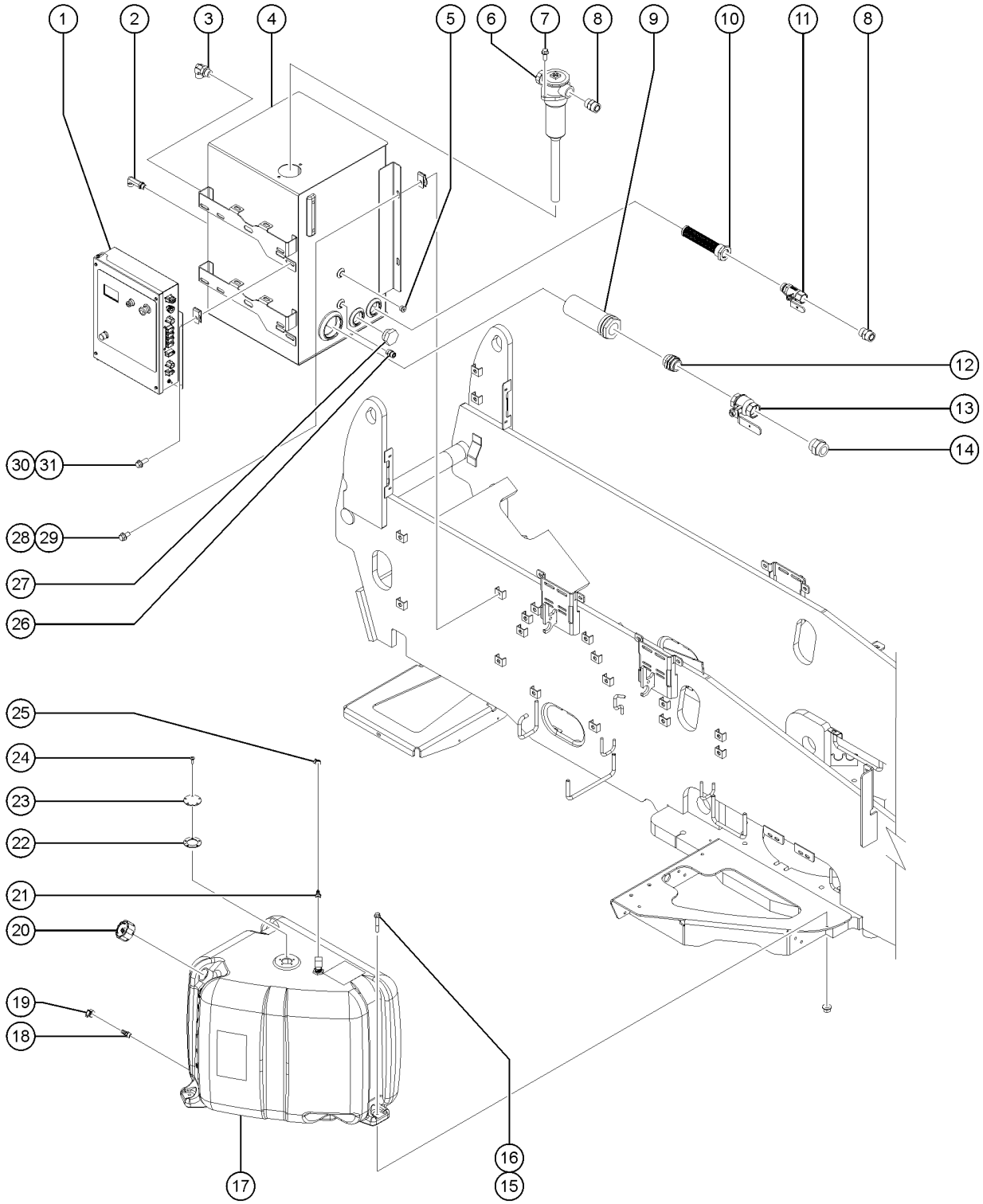

Item	Part No.	Description	Qty.
17B-	823356GT	TUBE,FUEL RETURN,3/8X3/8X23.5	
18	824471GT	FITTING,3/8 NPT TO 1/2 BARB	1
19	46131GT	CLAMP,HOSE,.63" - 1.0" X .5"	1
20	101726GT	CAP,FUEL,DIESEL,1/8"VENT(GRN) no longer available, (replaced by 1316635)	1
20B	1316635GT	CAP, FUEL, DIESEL, 0.08 IN HOLE (BLACK)	1
21	27901GT	HOSE END,BARBED,RIGID,-6-6	1
22	1271773GT	GASKET, TANK, FUEL SENSOR	1
23	1271772GT	CAP, TANK, FUEL SENSOR	1
24	1251757GT	SCREW,PHPM,10-32X.50,ZAG	5
25	81154GT	CLAMP,HOSE,SIZE .31 > .91	1
26	48933GT	CONN,520120-8***	1
27	1282197GT	PLUG,SAE-24,EXTERNAL HEX	1
28	824089GT	SCREW, HHF, 3/8-16 X .75, 8, ZAG	4
29	29868GT	SPRING CLIP,3/8-16,.05-.20X.73,ZAG	4
30	824078GT	SCREW,HHF,1/4-20X.75,8,ZAG	4
31	56912GT	SPRING CLIP,1/4-20,.025-.15X.54,ZAG	4

302.1 Hydraulic and Fuel Tanks - Gasoline/LPG Models

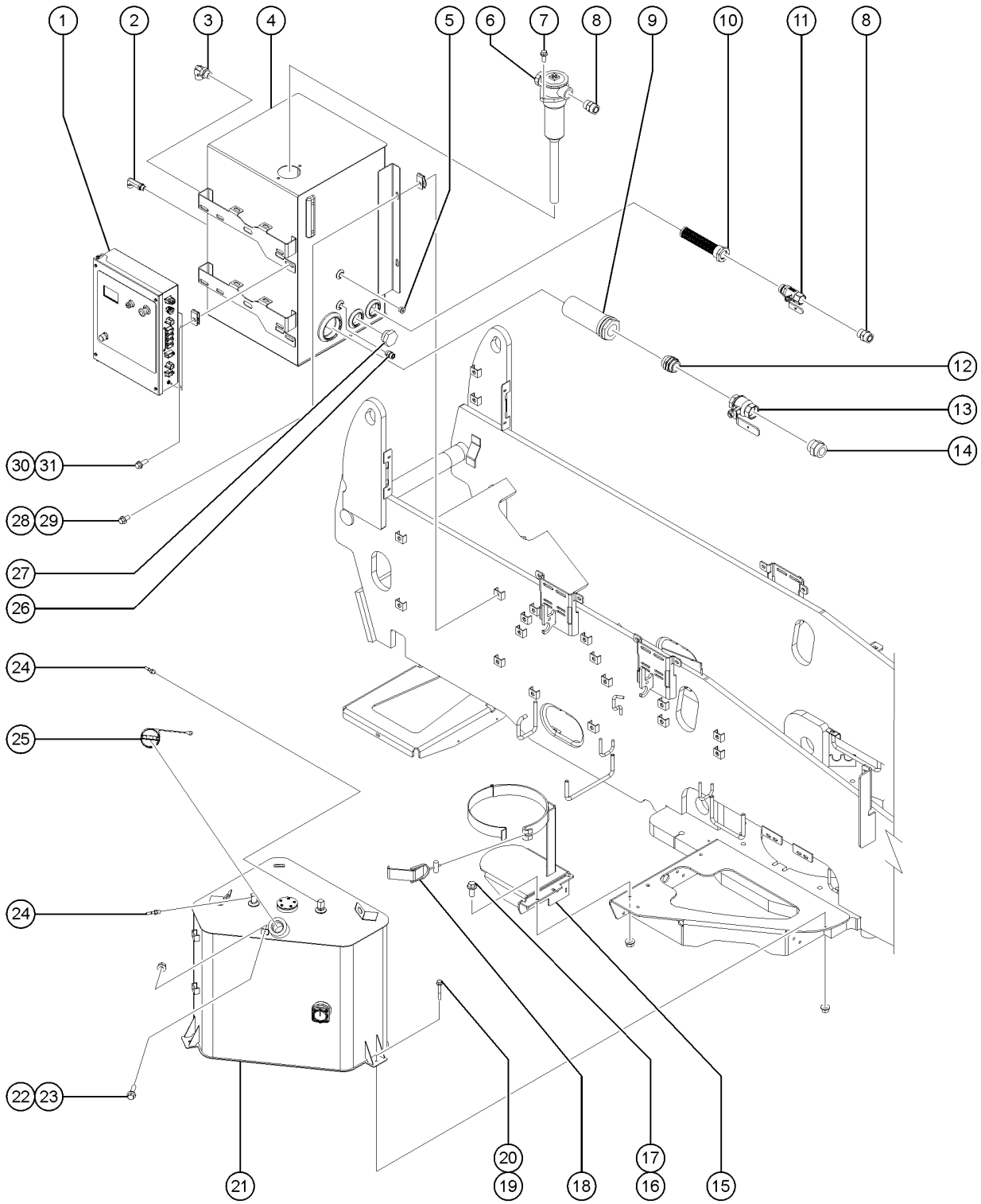

Item	Part No.	Description	Qty.
A	1289561GT	BRACKET, TELEMATICS	
B	1289520GT	MODULE, TELEMATICS, ZTR, M7, NORTH AMERICA to SN S85XCH-4690	
C	1313592GT	MODULE, ASSY,TELEMATICS, ZTR, M7, GLOBAL from SN S85XCH-4691	
D	1289521GT	MODULE, TELEMATICS, ZTR, M7, EMEA/APAC	
1		REF. GROUND CONTROL BOX (refer to 308.1 and 309.1)	1
2	75614GT	ELBOW,90D,LONG,521520-8	1
3	48959GT	FITTING,ELBOW,90D,520220-12	1
4	1281718GT	TANK, HYDRAULIC 40 GAL	1
4-	21141GT	GAUGE-SIGHT,LHA-LGTB***	1
5	59371GT	PLUG, HEX SOCKET, 090109B-8*	1
6	1281808GT	FILTER ASSY, INTANK, 49GPM	1
6-	1283103GT	KIT, FILTER ELEMENT, HYD TANK RETURN	
6-	1282117GT	FILTER,ELEMENT,HYD TANK,RETURN	
6-	1317967GT	SEAL KIT, FILTER ASSY - INTANK, 49GPM	1
7	824090GT	SCREW,HHF,3/8-16X1,8,ZAG	2
8	48984GT	CONN, 520120-16	2
9	75257GT	STRAINER ASSY,#24 O-RING	1
10	147419GT	KIT,STRAINER REPLACEMENT	1
11	48996GT	VALVE,BALL,16 MSAE-16 FSAE***	1
12	75254GT	UNION,STR.THREAD 24***	1
13	75256GT	VALVE BALL,24 FSAE-24 FSAE***	1
14	61083GT	CONN,520120-24	1
15	1267312GT	WELDMENT, LP MOUNT	1
16	1255469GT	SCREW,HHF,1/2-13X1.25,8,ZAG	4
17	1274172GT	NUT,NYLOCK FLG,1/2-13,G,ZAG	4
18	49000GT	L.P.TANK LATCH	1
19	1253478GT	SCREW,HHF,3/8-16X2,8,ZAG	3
20	1274322GT	NUT,NYLOCK FLG,3/8-16,F,ZAG	3

302.1 Hydraulic and Fuel Tanks - Gasoline/LPG Models

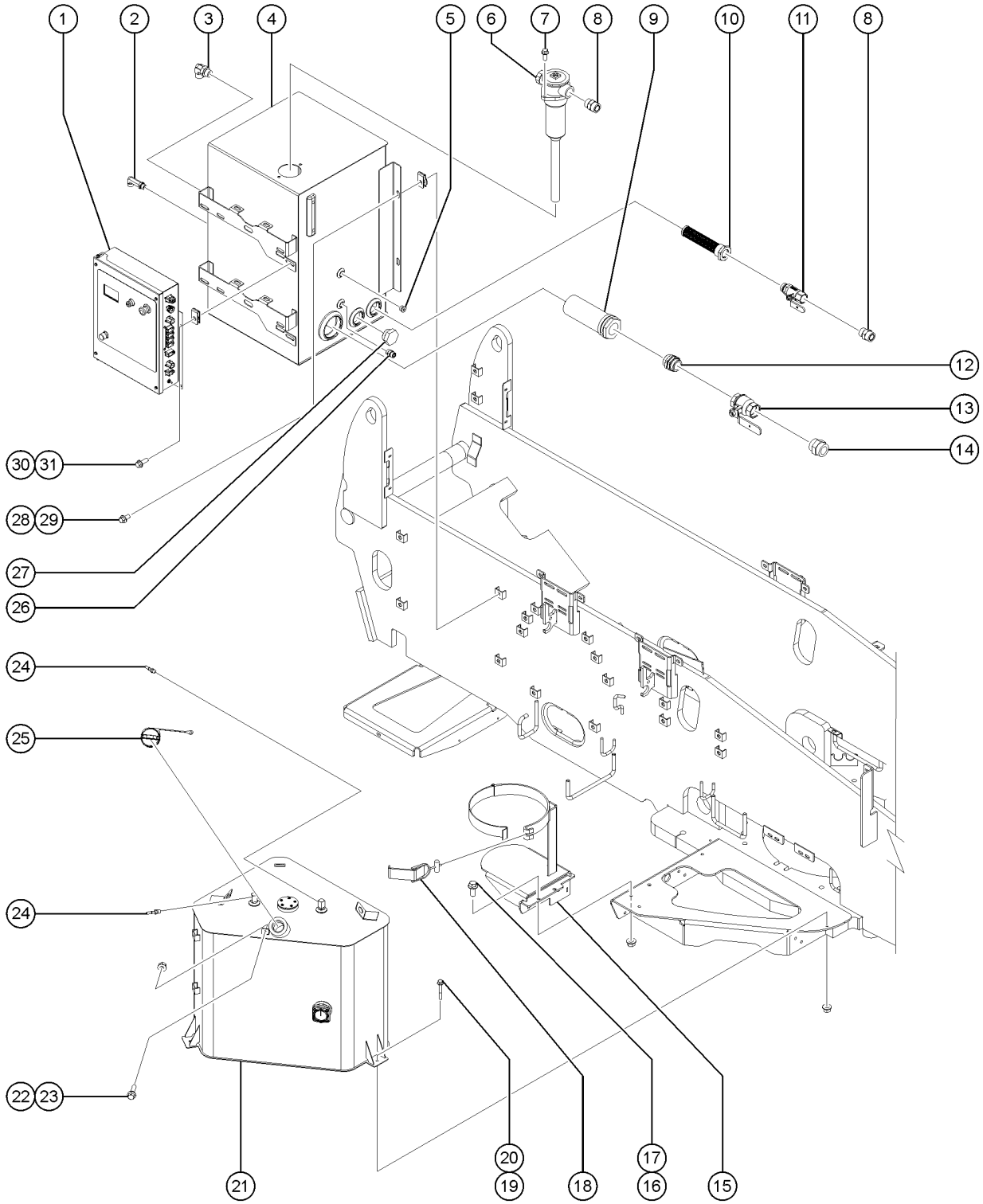

Item	Part No.	Description	Qty.
21	146415GT	TANK ASSY, GAS, 30 GAL.	1
21-		REF. ENGINE KIT COMPONENTS GM 3.0L Fuel pump, manifold and filters (refer to 412.1)	
21-	146413GT	GAUGE, FUEL LEVEL, 20/30 GAL	
21-	146417GT	ASSY, FUEL PICKUP TUBE	
21-	146551GT	GASKET, FUEL LEVEL SENDER, Z80	
21-	146552GT	PLATE, COVER, FUEL LEVEL SNDR	
21-	49826GT	SCREW,PHILLIPS,PHM,10-32 X.625	
22	824079GT	SCREW,HHF,1/4-20X1,8,ZAG	1
23	1277924GT	NUT,NYLOCK FLG,1/4-20,F,ZAG	1
24	111818GT	FITTING,1/4 NPT X SAE J2044	2
25	119918GT	CAP,FUEL,GASOLINE 3.5PSI	1
26	48933GT	CONN,520120-8***	1
27	1282197GT	PLUG,SAE-24,EXTERNAL HEX	1
28	824089GT	SCREW, HHF, 3/8-16 X .75, 8, ZAG	4
29	29868GT	SPRING CLIP,3/8-16,.05-.20X.73,ZAG	4
30	824078GT	SCREW,HHF,1/4-20X.75,8,ZAG	4
31	56912GT	SPRING CLIP,1/4-20,.025-.15X.54,ZAG	4

303.1 Hydraulic Tank Side Components

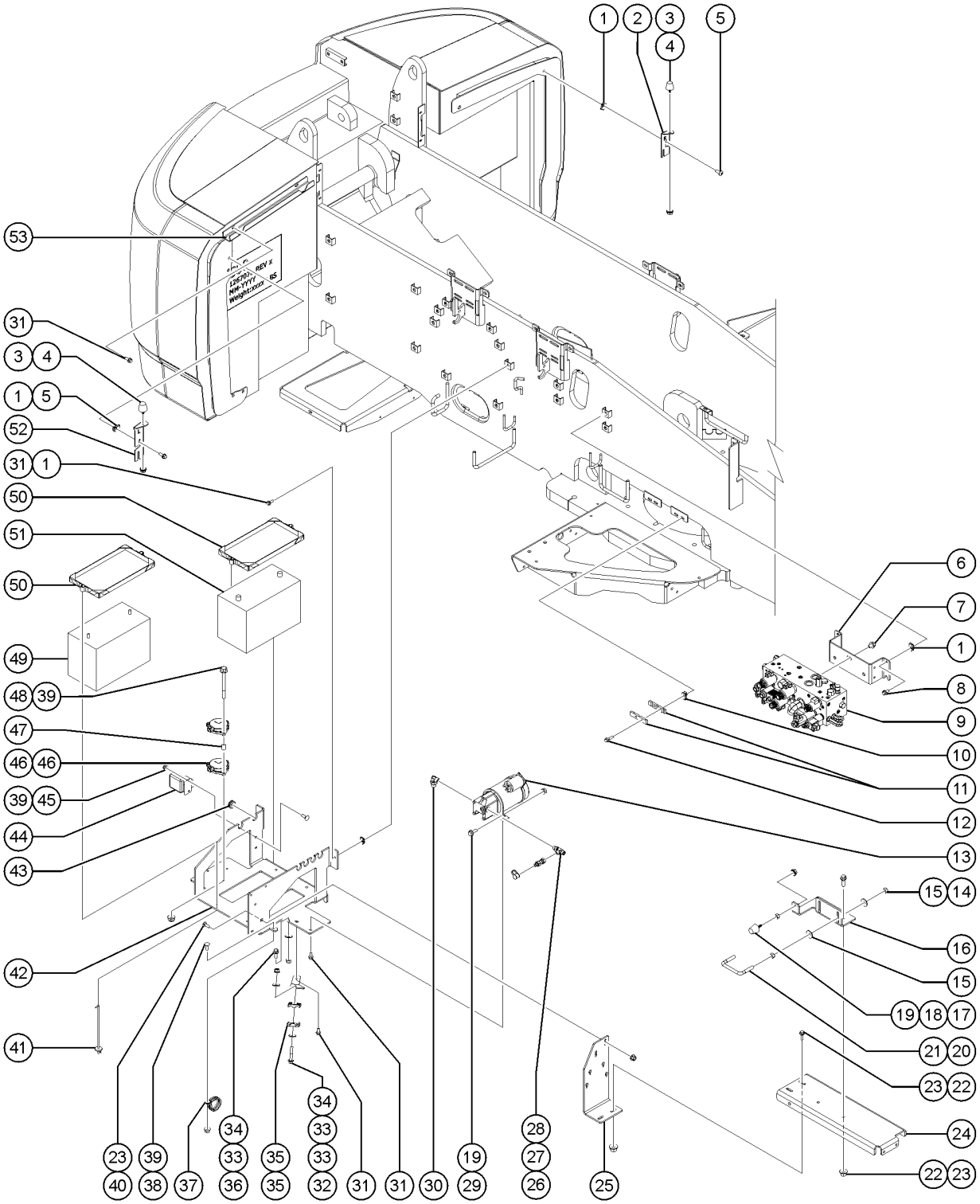

Item	Part No.	Description	Qty.
1	29868GT	SPRING CLIP,3/8-16,.05-.20X.73,ZAG	16
2	1272230GT	FORMING, BRKT, ENGINE COVER	2
3	30973GT	BUMPER,RUBBER-1 X 1.25	4
4	1255805GT	NUT,SERRATED,5/16-18,8,ZAG	
5	1255393GT	SCREW,BHC,3/8-16X1,F835,ZAG	4
6	1312900GT	FORMING,MANIFOLD MOUNT	1
7	1257454GT	SCREW,HHF,1/2-13X.75,8,ZAG	3
8	824089GT	SCREW, HHF, 3/8-16 X .75, 8, ZAG	4
9		REF. FUNCTION MANIFOLD (refer to 706.1)	
10	56912GT	SPRING CLIP,1/4-20,.025-.15X.54,ZAG	4
11	121690GT	CLAMP,HALF,HARDLINE,3/8	4
12	824079GT	SCREW,HHF,1/4-20X1,8,ZAG	4
13	146180GT	ASSEMBLY, AUX POWER UNIT, 12VDC	1
13-	1264969GT	MOTOR, 12VDC, I-TERMINAL	
13-	146181GT	SOLENOID, APU	
13-	146182GT	GROUND WIRE,SOLENOID	
13-	37187GT	SEAL KIT, 37185 PUMP	
13-	37192GT	COUPLER, PUMP / MOTOR (36179)	
13-	58489GT	PUMP ASSY,AUX.POWER UNIT 89617	
13-	62414GT	SEAL, SHAFT, 60511 APU	
14	1255804GT	NUT,JAM,1/2-13,A,ZAG	2
15	1255760GT	WASHER,FLAT,1/2,USS,ZAG	4
16	1283180GT	FORMING,BRACKET,COVER LATCH,S80/85 XC	1
17	1261277GT	RUBBER BUMPER, 1.25 X 1.25 IN	1
18	1256468GT	NUT,3/8-16,8,ZAG	1
19	1274167GT	NUT,NYLOCK FLG,5/16-18,F,ZAG	2
20	1259855GT	UBOLT, 0.4724 IN D X 4 IN L	1
21	1259106GT	NUT,1/2-13,8,ZAG	2

303.1 Hydraulic Tank Side Components

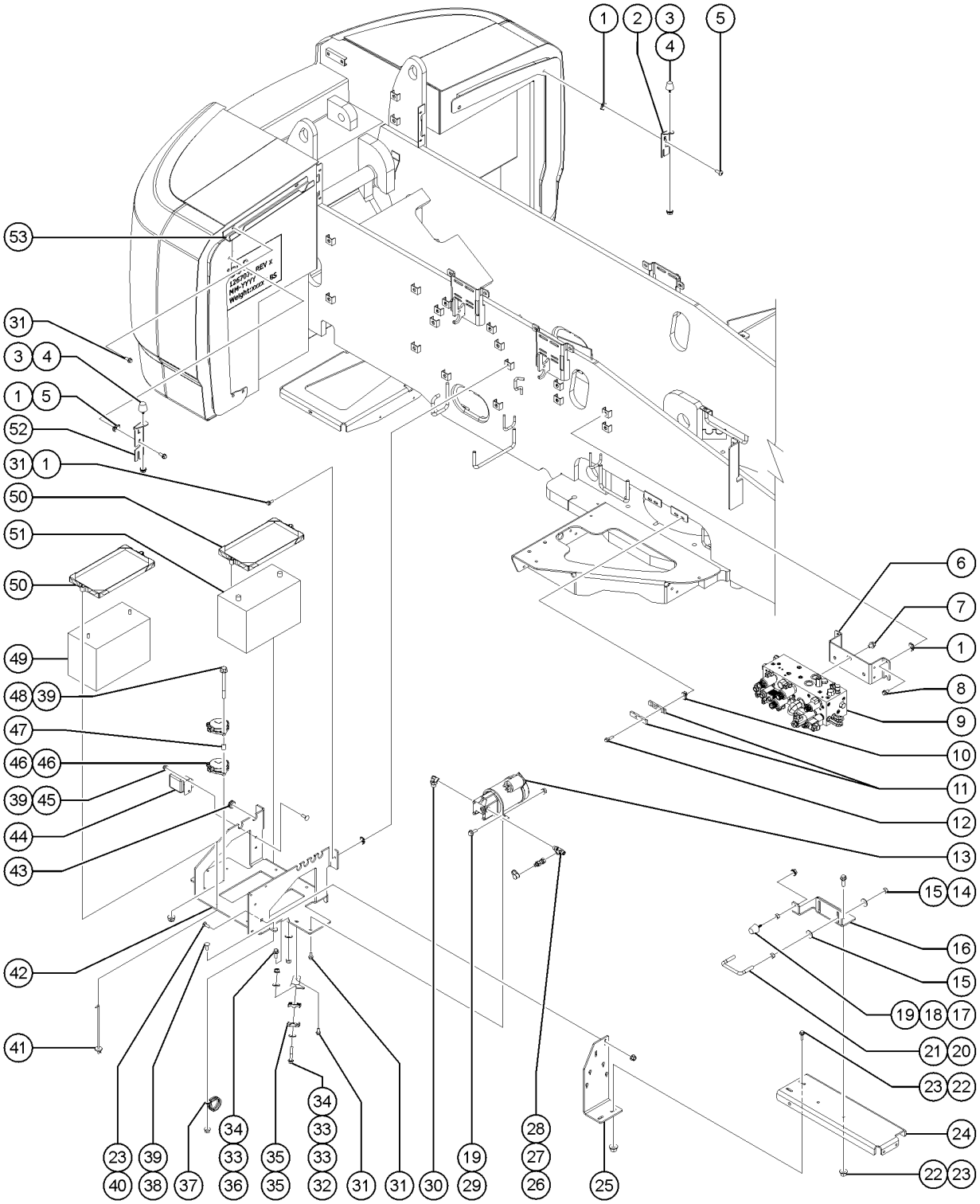

Item	Part No.	Description	Qty.
22	824091GT	SCREW, HHF, 3/8-16 X 1.25, 8, ZAG	6
23	1274322GT	NUT,NYLOCK FLG,3/8-16,F,ZAG	9
24	1280126GT	FORMING,BRACKET,LATCH	1
25	1274974GT	FORMING, LATCH, SUPPORT	1
26	48918GT	TEE,RUN,520428-6	1
27	48867GT	NIPPLE,DIAGNOSTIC	1
28	48880GT	CAP,DIAGNOSTIC NIPPLE	1
29	824086GT	SCREW, HHF, 5/16-18 X 1, 8, ZAG	1
30	48932GT	FITTING,ELBOW,90D,520220-8***	1
31	824090GT	SCREW,HHF,3/8-16X1,8,ZAG	15
32	824081GT	SCREW, HHF, 1/4-20 X 1.5, 8, ZAG	1
33	824113GT	WASHER,FLAT,USS,1/4,ZAG	3
34	1274165GT	NUT,NYLOCK,1/4-20,C,ZAG	2
35	78736GT	CLAMP,2 HOSE,PLASTIC	2
36	824078GT	SCREW,HHF,1/4-20X.75,8,ZAG	1
37	66031GT	CLAMP,1.88,#30 X 3/8,RUB CUSH	1
38	1256127GT	BOLT,CARRIAGE,1/4-20X1",GR 5,ZAG	1
39	1277924GT	NUT,NYLOCK FLG,1/4-20,F,ZAG	6
40	1255757GT	BOLT,CARRIAGE,3/8-16X1.25,5,ZAG	2
41	45708GT	HOOK,BATT HOLD DOWN,10"	4
42	1274550GT	FORMING, BATTERY TRAY, XC	1
43	104570GT	GROMMET,RUBBER .688 X .25 X 1	5
44	237068GT	SEPARATOR,DUAL BATTERY,100A	1
44-	214393GT	KIT, BATT SEPARATOR, ANSI/CSA	
44-	215209GT	KIT, BATT SEPARATOR, CE	
44-	215210GT	KIT, BATT SEPARATOR, AS	
45	824124GT	BOLT, CARRIAGE, 1/4-20 X .75, 5, ZAG	2
46	823368GT	SENSOR,LEVEL,UNIVERSAL	2

303.1 Hydraulic Tank Side Components

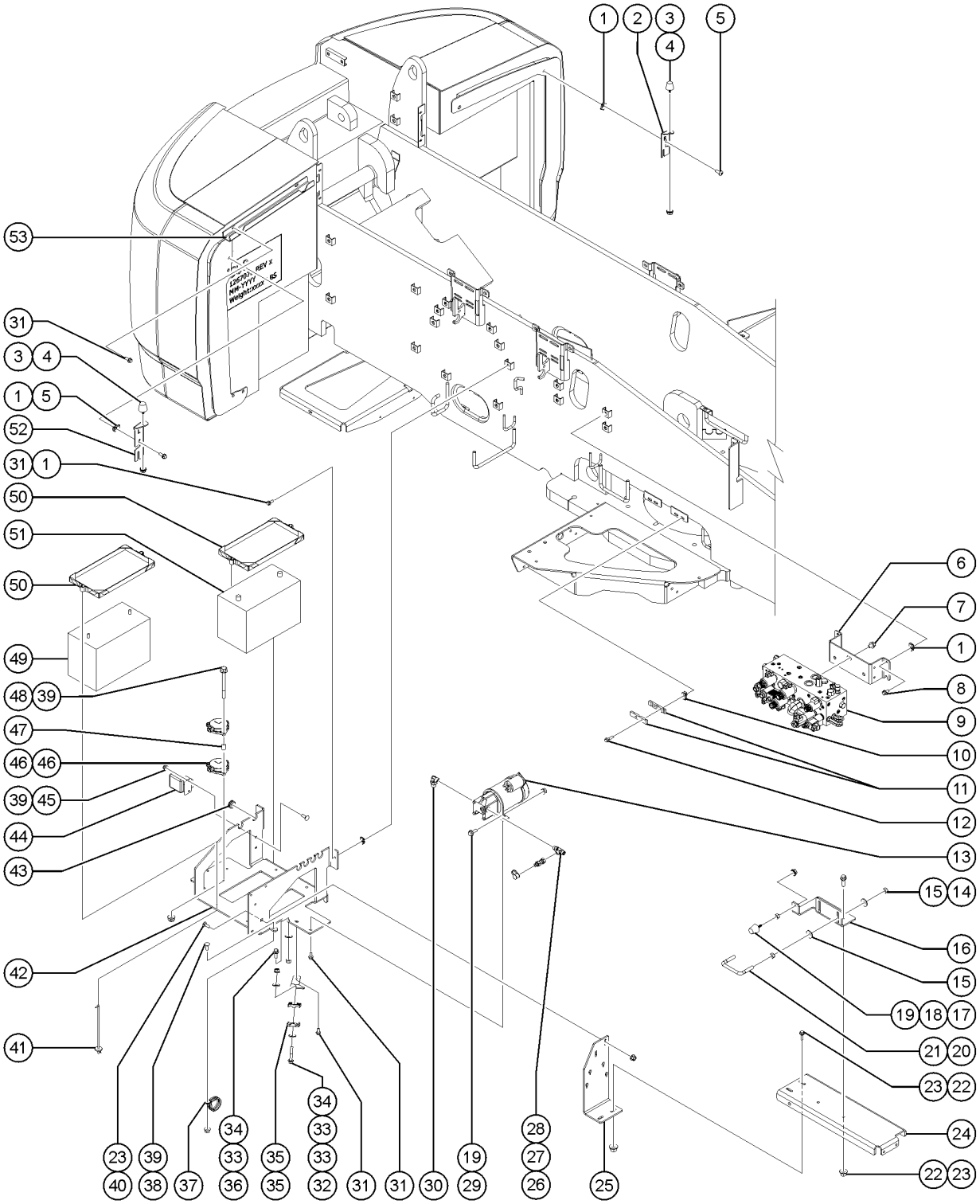

Item	Part No.	Description	Qty.
47	8149GT	SPACER,NYLON .257 X .5 X .75"	3
48	824083GT	SCREW,HHF,1/4-20X2.5,8,ZAG	3
49	77694GT	BATTERY,12V DEEP CYC 5/16"STUD	1
49-	1274322GT	NUT,NYLOCK FLG,3/8-16,F,ZAG	
50	1303581GT	BATTERY, 12V, 950CCA, FLA	2
51	1303581GT	BATTERY, 12V, 950CCA, FLA	1
52	1272231GT	FORMING,BRKT,TANK COVER	2
53	1276677GT	FORMING, RAIN TRAY	1

304.1 Turntable Covers - Hydraulic Tank Side

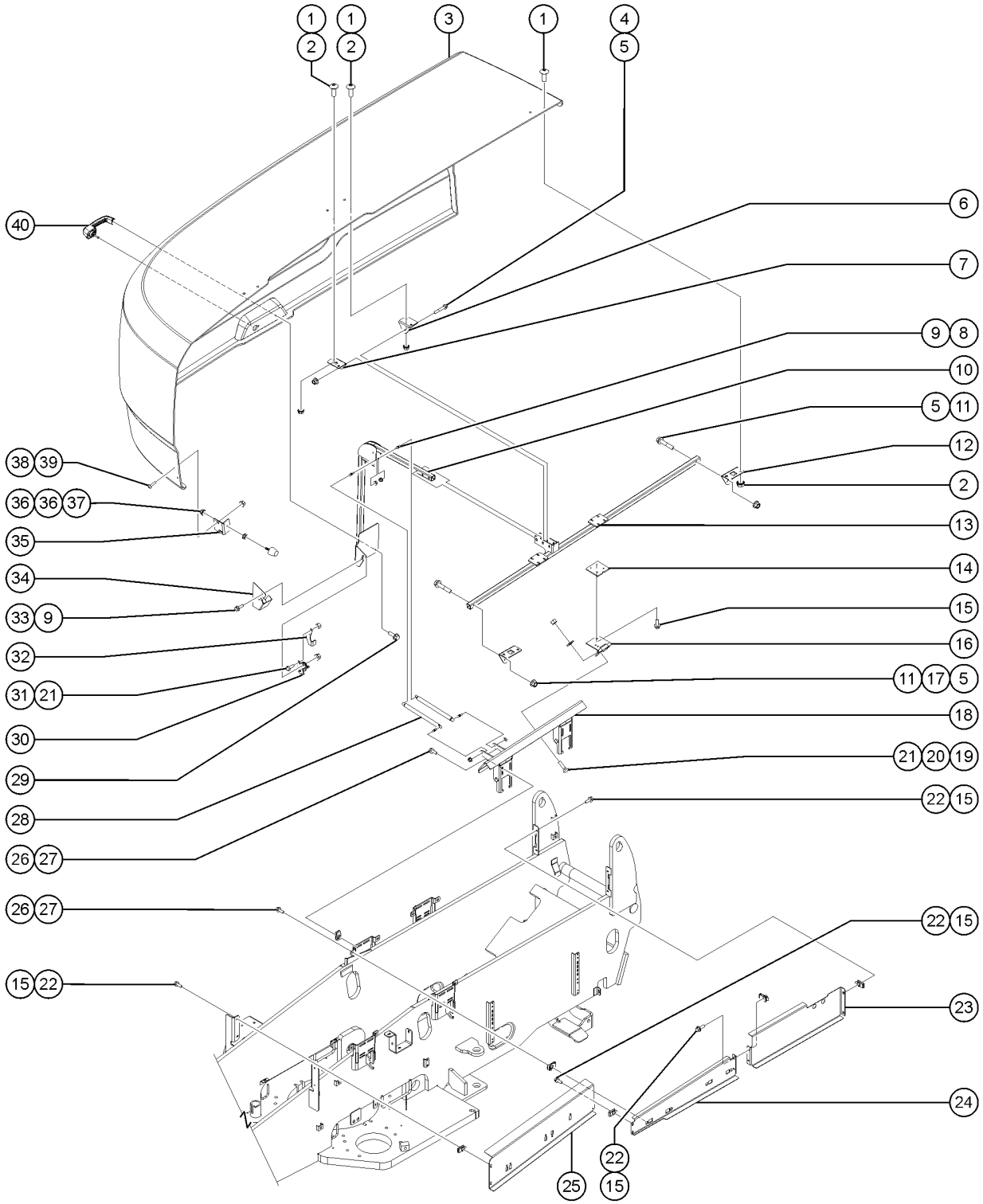

Item	Part No.	Description	Qty.
1	1261836GT	SCREW, THM, TORX, 3/8-16X1,SS	8
2	1257628GT	NUT,SERRATED,3/8-16,ZAG	8
3	1265999GT	COVER, SWING CHASSIS, TANK SIDE	1
4	1256856GT	SCREW,HHF,3/8-16X2.5,8,ZAG	3
5	1274322GT	NUT,NYLOCK FLG,3/8-16,F,ZAG	5
6	1253831GT	MOUNT, COVER SUPPORT CTR 93DEG	1
7	1253830GT	MOUNT, COVER SUPPORT CTR 86DEG	1
8	33555GT	BALL STUD**	4
9	1274167GT	NUT,NYLOCK FLG,5/16-18,F,ZAG	6
10	1266895GT	WLDMT, LOWER COVER SUPPORT	1
11	1253478GT	SCREW,HHF,3/8-16X2,8,ZAG	2
12	1258723GT	MOUNT, COVER SUPPORT FRONT	1
13	1266897GT	WLDMT,HIGHER COVER SUPPORT,TS	1
14	1258724GT	SUPPORT, TAPPED HINGE	2
15	824078GT	SCREW,HHF,1/4-20X.75,8,ZAG	12
16	1266902GT	HINGE,.375X.1875THK,SLOTTED	2
17	1258722GT	MOUNT, COVER SUPPORT REAR	1
18	1269080GT	WELDMENT, COVER SUPPORT,TANK SIDE	1
19	1256127GT	BOLT,CARRIAGE,1/4-20X1",GR 5,ZAG	6
20	824113GT	WASHER,FLAT,USS,1/4,ZAG	6
21	1274165GT	NUT,NYLOCK,1/4-20,C,ZAG	8
22	56912GT	SPRING CLIP,1/4-20,.025-.15X.54,ZAG	8
23	1267082GT	FORMING,COVER,RIGHT BACK	1
24	1267083GT	FORMING,COVER,RIGHT MIDDLE	1
25	1280379GT	FORMING,COVER,RIGHT FRONT	1
26	824090GT	SCREW,HHF,3/8-16X1,8,ZAG	8
27	29868GT	SPRING CLIP,3/8-16,.05-.20X.73,ZAG	8
28	28301GT	GAS STRUT,250 LBS FORCE***	2

304.1 Turntable Covers - Hydraulic Tank Side

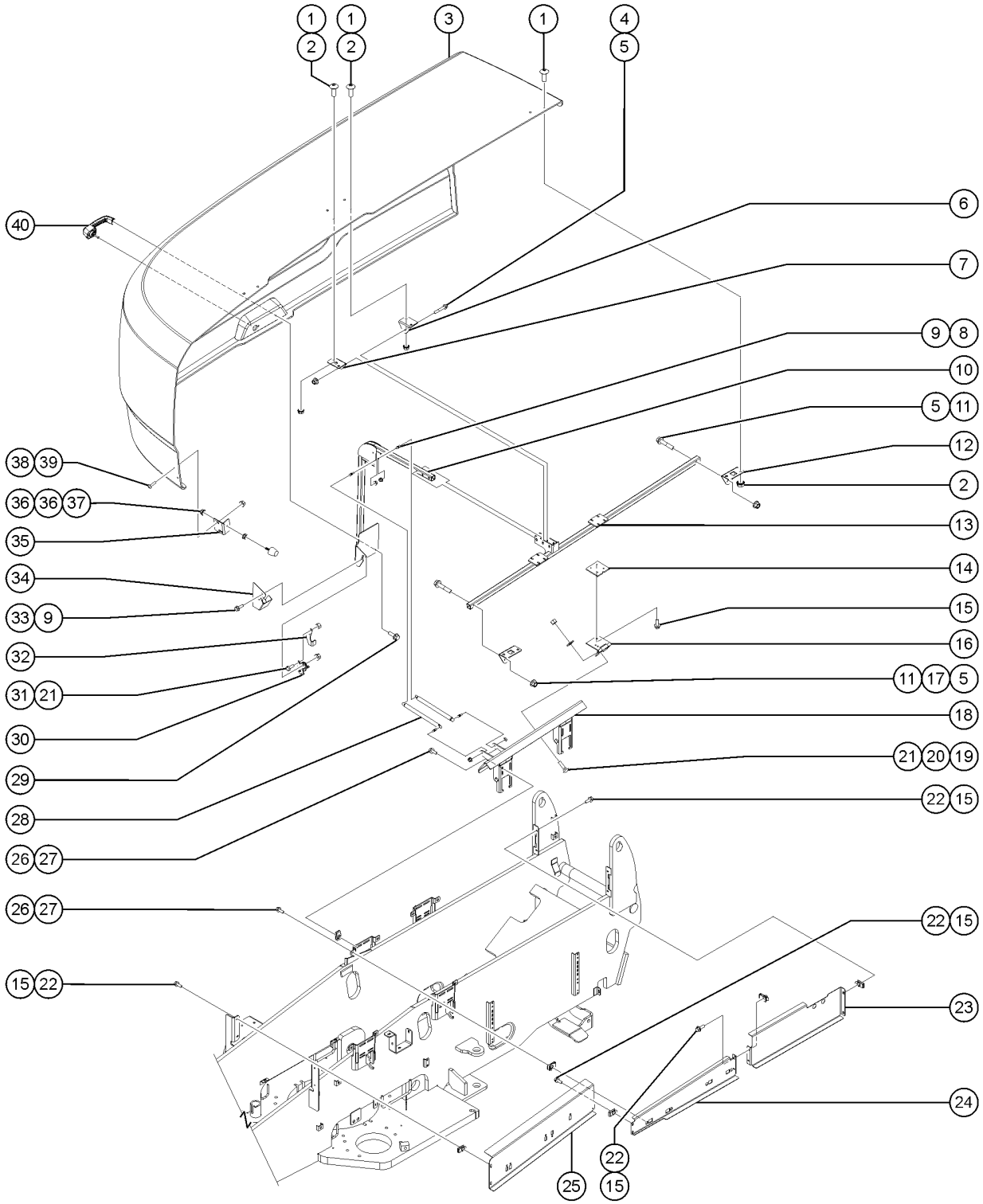

Item	Part No.	Description	Qty.
29	231532GT	SCREW,HHF,M6-1.0X20,DIN6921,10.9,ZAB	2
30	215254GT	LATCH,ROTARY,ENGINE COVER	1
31	824059GT	SCREW, HHC, 1/4-20 X .75, 8, ZAG	2
32	1262210GT	FORMING, LATCH TRIGGER, TS	1
33	1255763GT	SCREW,HHF,5/16-18X1.5,8,ZAG	2
34	1261244GT	FORMING,LATCH GUARD,TS	1
35	1271984GT	BRACKET, BUMPER	1
36	1255805GT	NUT,SERRATED,5/16-18,8,ZAG	2
37	1261277GT	RUBBER BUMPER, 1.25 X 1.25 IN	1
38	1261837GT	SCREW, THM, TORX, M6X25, ZAB	2
39	231513GT	NUT,TL FLG,M6-1.0,DIN6927,10,Z	2
40	1256054GT	HANDLE,YELLOW LOCKING,CODE 455	1
40-	37947GT	KEYS,10 PACK*** sold separately	
40-	83093GT	KEY SINGLE*** sold separately	

305.1 Turntable Covers - Engine Side

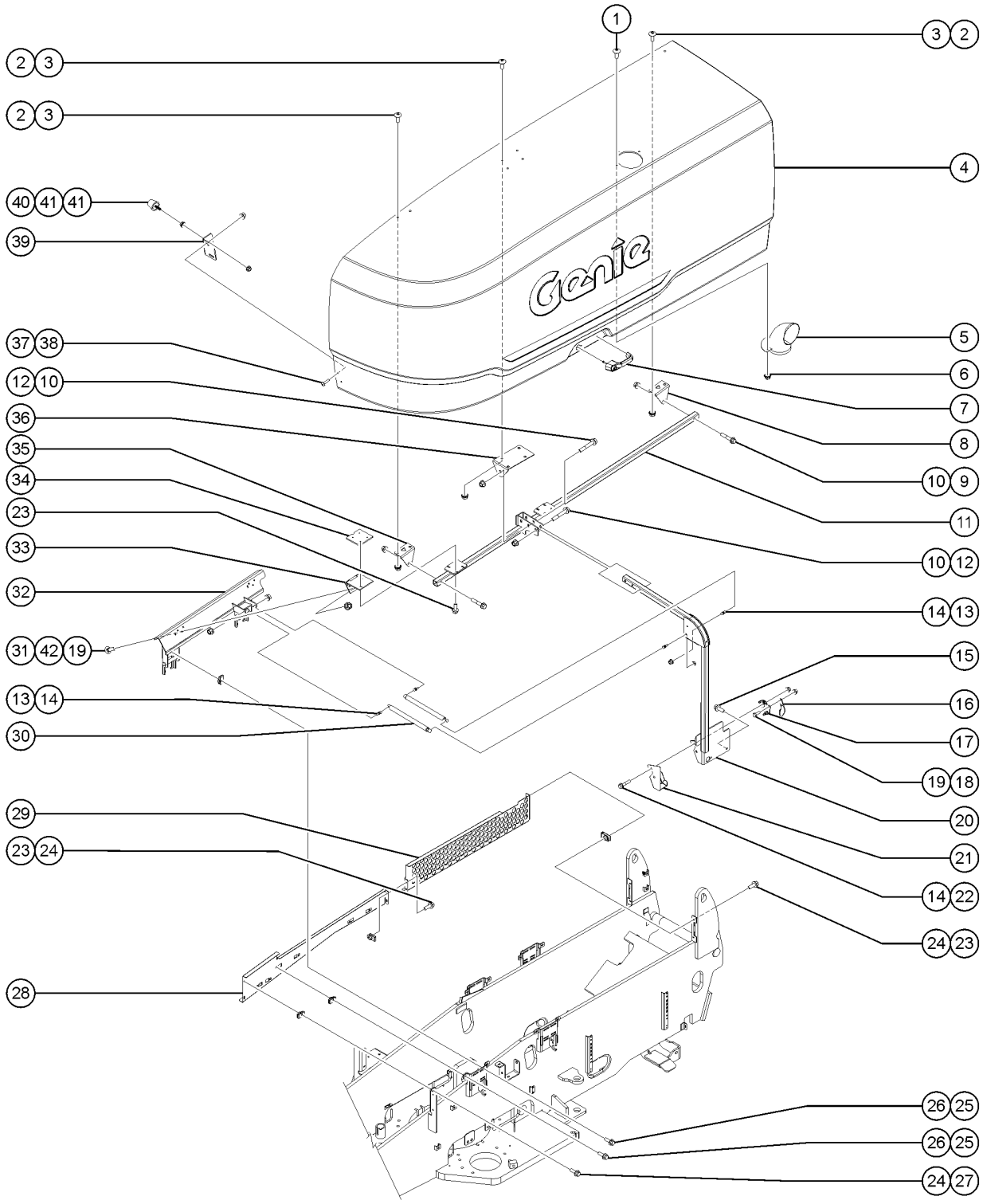

Item	Part No.	Description	Qty.
1	1261835GT	SCREW, THM, TORX, 1/4-20X1,SS	3
2	1261836GT	SCREW, THM, TORX, 3/8-16X1,SS	8
3	1257628GT	NUT,SERRATED,3/8-16,ZAG	8
4	1253264GT	COVER, SWING CHASSIS, ES	1
5	101964GT	WELDMENT,EXHAUST TUBE	1
6	1256679GT	NUT,SERRATED,1/4-20,8,ZAG	3
7	1256054GT	HANDLE,YELLOW LOCKING,CODE 455	1
7-	37947GT	KEYS,10 PACK*** sold separately	
7-	83093GT	KEY SINGLE*** sold separately	
8	1258723GT	MOUNT, COVER SUPPORT FRONT	1
9	1253478GT	SCREW,HHF,3/8-16X2,8,ZAG	2
10	1274322GT	NUT,NYLOCK FLG,3/8-16,F,ZAG	5
11	1266916GT	WLDMT,HIGHER COVER SUPPORT,ES	1
12	1256856GT	SCREW,HHF,3/8-16X2.5,8,ZAG	3
13	33555GT	BALL STUD**	4
14	1274167GT	NUT,NYLOCK FLG,5/16-18,F,ZAG	6
15	231532GT	SCREW,HHF,M6-1.0X20,DIN6921,10.9,ZAB	2
16	1262211GT	FORMING, LATCH TRIGGER, ES	1
17	215254GT	LATCH,ROTARY,ENGINE COVER	1
18	824059GT	SCREW, HHC, 1/4-20 X .75, 8, ZAG	2
19	1274165GT	NUT,NYLOCK,1/4-20,C,ZAG	8
20	1267309GT	WLDMT, LOWER COVER SUPPORT	1
21	1261245GT	FORMING,LATCH GUARD,ES	1
22	1255763GT	SCREW,HHF,5/16-18X1.5,8,ZAG	2
23	824078GT	SCREW,HHF,1/4-20X.75,8,ZAG	8
24	56912GT	SPRING CLIP,1/4-20,.025-.15X.54,ZAG	6
25	824090GT	SCREW,HHF,3/8-16X1,8,ZAG	8
26	29868GT	SPRING CLIP,3/8-16,.05-.20X.73,ZAG	8

305.1 Turntable Covers - Engine Side

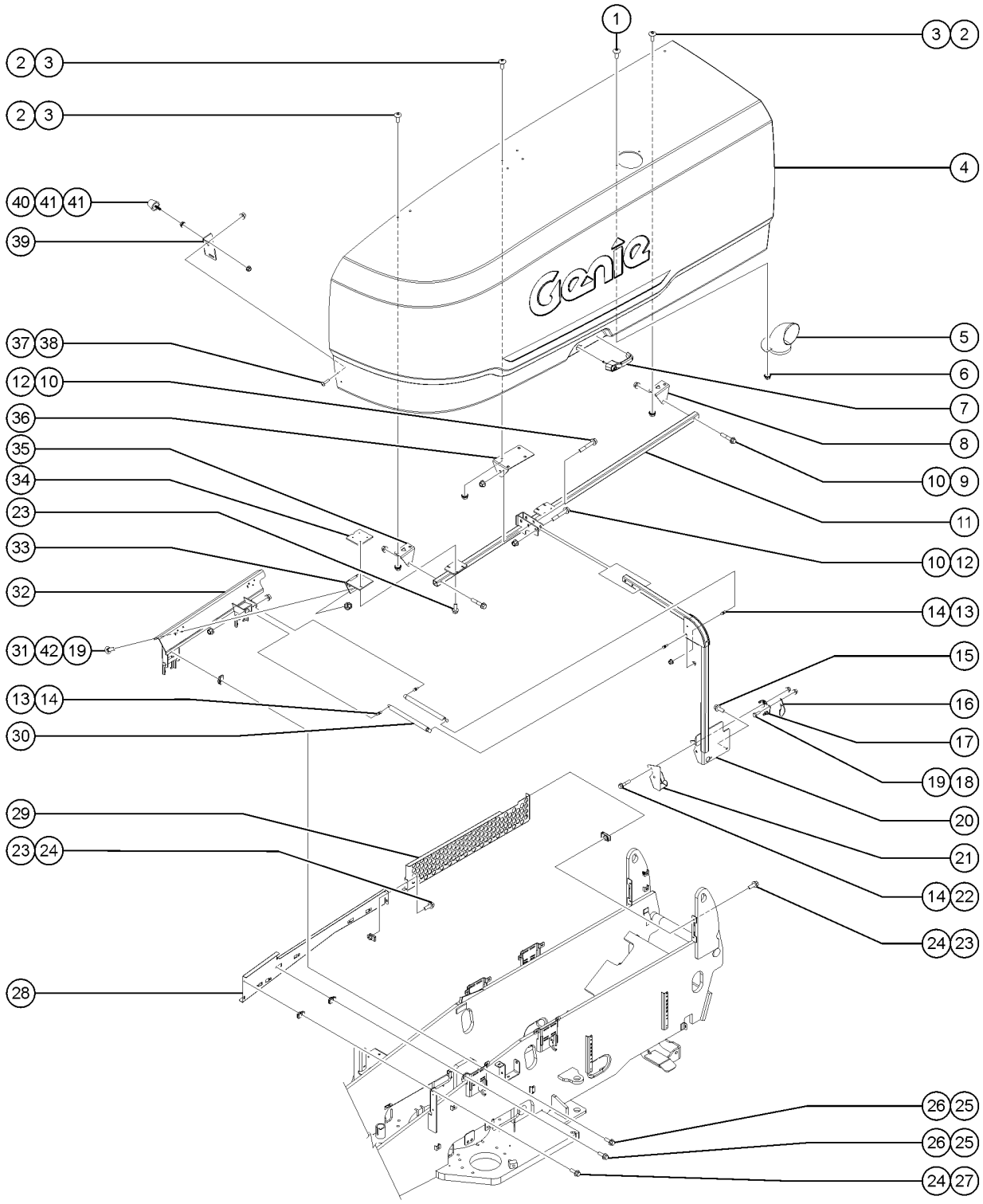

Item	Part No.	Description	Qty.
27	824079GT	SCREW,HHF,1/4-20X1,8,ZAG	2
28	1267081GT	FORMING,COVER,LEFT FRONT	1
29	1267080GT	FORMING,COVER,LEFT BACK	1
30	28301GT	GAS STRUT,250 LBS FORCE***	2
31	1256127GT	BOLT,CARRIAGE,1/4-20X1",GR 5,ZAG	6
32	1269081GT	WELDMENT, COVER SUPPORT,ENGINE SIDE	1
33	1266902GT	HINGE,.375X.1875THK,SLOTTED	2
34	1258724GT	SUPPORT, TAPPED HINGE	2
35	1258722GT	MOUNT, COVER SUPPORT REAR	1
36	1278128GT	MOUNT, COVER SUPPORT, CENTER	1
37	1261837GT	SCREW, THM, TORX, M6X25, ZAB	2
38	231513GT	NUT,TL FLG,M6-1.0,DIN6927,10,Z	2
39	1271984GT	BRACKET, BUMPER	1
40	1261277GT	RUBBER BUMPER, 1.25 X 1.25 IN	1
41	1255805GT	NUT,SERRATED,5/16-18,8,ZAG	2
42	824113GT	WASHER,FLAT,USS,1/4,ZAG	

306.1 Turntable Components and Swivel Drive Assembly

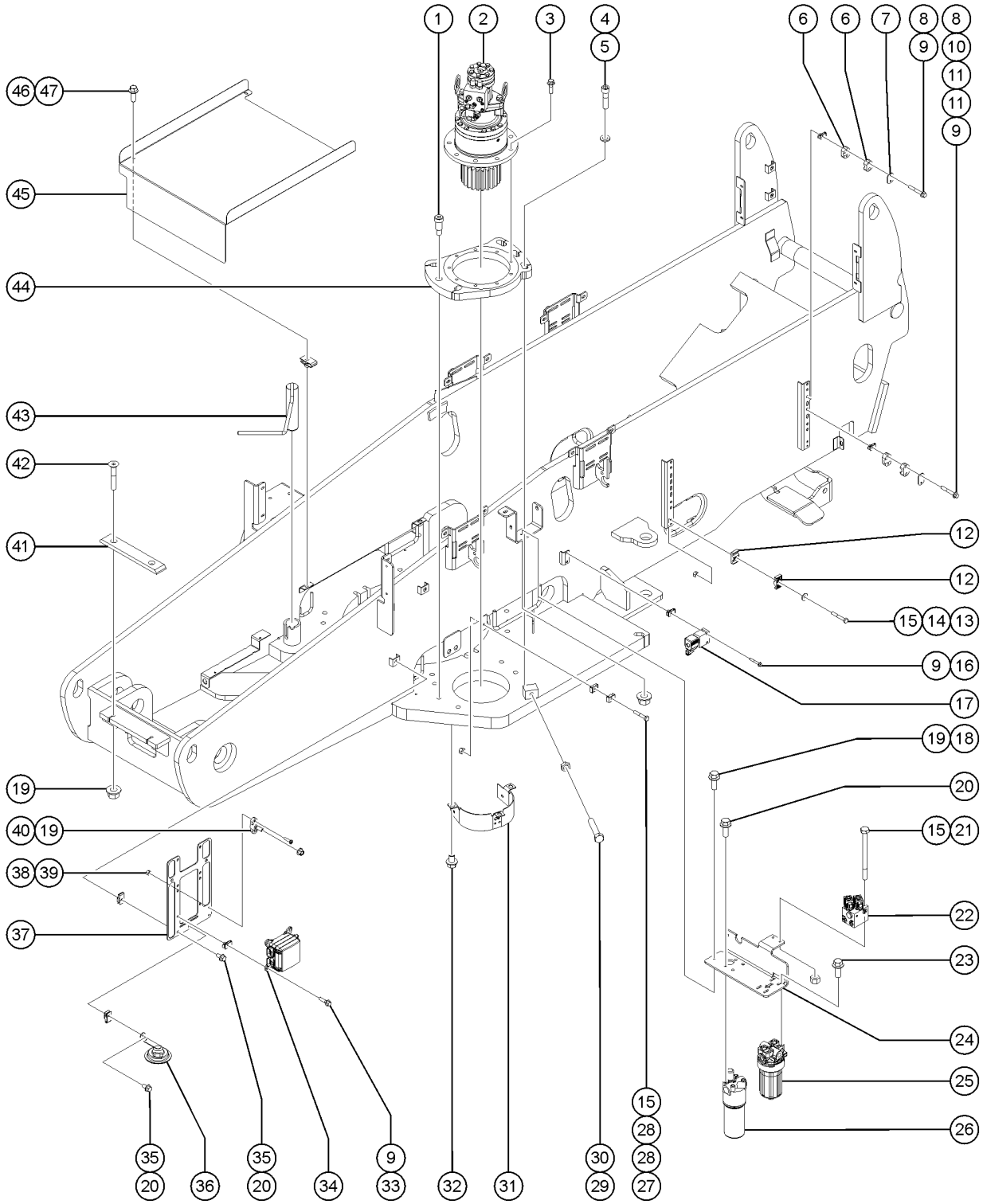

Item	Part No.	Description	Qty.
1	1269586GT	BOLT,SHS,1.0X1.5X3/4-10,ZAG	1
2	1255768GT	SWING DRIVE ASSEMBLY	1
2-	1315824GT	BEARING/SEAL KIT (1255768)	
2-	1255769GT	SEAL KIT, SWING BRAKE (Used on swing drive 1255768)	
2-	1255770GT	KIT, FRICTION DISC (Used on swing drive 1255768)	
2-	1255771GT	KIT, BRAKE SPRING (Used on swing drive 1255768)	
2-	1255772GT	KIT, SWING BRAKE REBUILD (Used on swing drive 1255768)	
2-	1255773GT	BRAKE TUBING (Used on swing drive 1255768)	
2-	139308GT	SWING MOTOR COMPLETE*** (Used on swing drive 1255768)	
2-	139309GT	CBV ASSEMBLY*** (Used on swing drive 1255768)	
2-	139315GT	O-RING,MOTOR/BRAKE*** (Used on swing drive 1255768)	
2-	139323GT	VALVE,COUNTERBAL,CBCA-LIN*** (Used on swing drive 1255768)	
2-	58304GT	SHAFT,OUTPUT (Used on swing drive 1255768)	
3	1257727GT	SCREW,HHF-S,1/2-13X1.75,ZAG	9
4	1256860GT	SCREW,SHC,3/4-10X3,A574,ZAG	5
5	1256863GT	WASHER,FLAT,.75,F436,HRD,ZAG	5
6	121219GT	CLAMP HALF,#8 TUBE	4
7	121217GT	COVER PLATE,TUBE CLAMP #8	2
8	1257866GT	SCREW,HHF,1/4-20X2.25,8,ZAG	8
9	56912GT	SPRING CLIP,1/4-20,.025-.15X.54,ZAG	14
10	121216GT	COVER PLATE, TUBE CLAMP #12	2
11	121218GT	CLAMP HALF,#12 TUBE	4
12	78736GT	CLAMP,2 HOSE,PLASTIC	2
13	824063GT	SCREW,HHC,1/4-20X1.75,8,ZAG	1
14	824113GT	WASHER,FLAT,USS,1/4,ZAG	1
15	1274165GT	NUT,NYLOCK,1/4-20,C,ZAG	4
16	1253485GT	SCREW,HHF,1/4-20X2,8,ZAG	2
17		REF. VALVE,FUNCTION ENABLE (refer to 703.1)	

306.1 Turntable Components and Swivel Drive Assembly

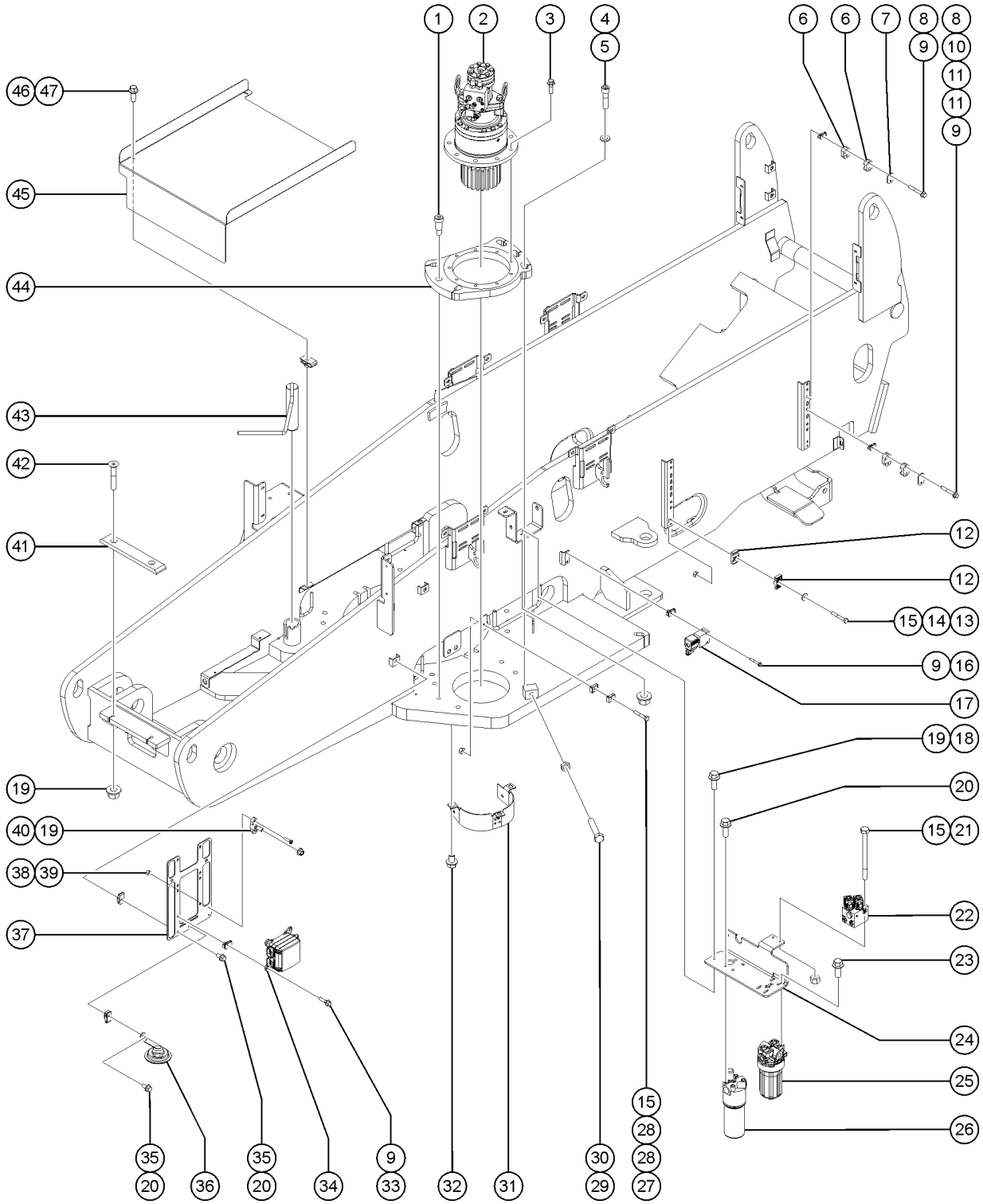

Item	Part No.	Description	Qty.
18	824090GT	SCREW,HHF,3/8-16X1,8,ZAG	2
19	1274322GT	NUT,NYLOCK FLG,3/8-16,F,ZAG	5
20	824089GT	SCREW, HHF, 3/8-16 X .75, 8, ZAG	8
21	1256123GT	SCREW,HHC,1/4-20X3.25,8,ZAG	2
22		REF. TWO SPEED BRAKE MANIFOLD (refer to 702.1)	
23	824078GT	SCREW,HHF,1/4-20X.75,8,ZAG	4
24	1281796GT	FORMING, FILTER MOUNTING BRACKET, S-80/85 XC	1
25	1267807GT	ASSEMBLY, MED. PRESS. FILTER, SAE8	1
25-	1268229GT	ELEMENT-5 MIC, PAPER, W/ BYPASS	
26	60334GT	FILTER ASSY,HIGH PRESS SAE-12*	1
26-	58222GT	O-RING,FILTER ASSY (60334)***	
26-	58223GT	SEAL,FILTER ASSY (60334)***	
26-	60857GT	FILTER,ELEMENT,BETA(5)=1000	
27	824062GT	SCREW,HHC,1/4-20X1.5,8,ZAG	1
28	121215GT	CLAMP HALF, #6 DOUBLE TUBE	2
29	1256846GT	SCREW,HEX TAP,3/4-10X4,8,ZAG	1
30	1256837GT	NUT,JAM,3/4-10,A, ZAG	1
31	81986PGT	COVER,ROTATION GEAR PAINTED	1
32	1257723GT	SCREW,HHF-S,1/2-13X.75,8,ZAG	3
33	824079GT	SCREW,HHF,1/4-20X1,8,ZAG	4
34	1269738GT	MODULE, VEC, ALC600	1
34A-	1251502GT	FUSE, ATM, 10AMP	
34A-	1251503GT	RELAY, 12V MICRO, 35AMP	
34A-	1251504GT	DIODE, 6A 22903-6V	
34A-	1251505GT	TOOL, FUSE PULLER, ATM	
34A-	1251506GT	FUSE, ATM, 5AMP	
34A-	1279520GT	CIRCUIT BREAKER 20A,TIII, ATC, 14VDC	
34A-	1279521GT	CIRCUIT BREAKER 15A,TIII, ATC, 14VDC	

306.1 Turntable Components and Swivel Drive Assembly

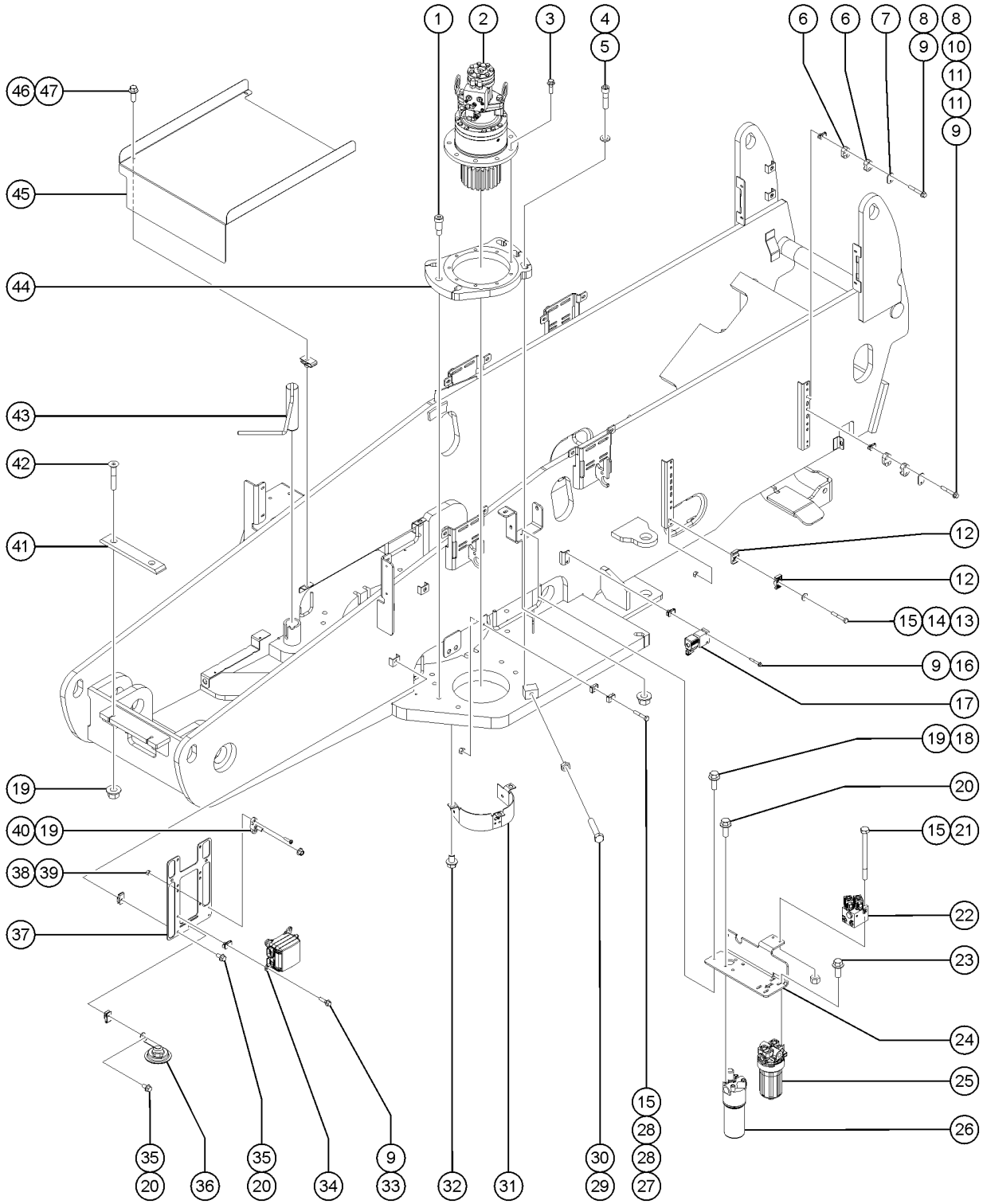

Item	Part No.	Description	Qty.
34A-	1279522GT	RELAY SOLID STATE, 12V, 20A (B120-7022)	
34A-	1280401GT	CIRCUIT BREAKER, 30AMP MINI	
35	29868GT	SPRING CLIP,3/8-16,.05-.20X.73,ZAG	4
36	81578GT	HORN,12VDC,SPADE TERMINALS***	1
37	1279748GT	PLATE, VEC, MOUNTING, BRACKET	1
38	1274168GT	NUT,NYLOCK,10-32,A,ZAG	2
39	49816GT	SCREW,PHILLIPS,PHM,10-32 X .75	2
40	94982GT	STANDOFF, 3/8" BLACK	1
41	41549GT	PAD,BOOM REST	1
42	1256842GT	SCREW,FHS,3/8-16X2.25,F835,ZAG	2
43	121353GT	WELDMENT, TRANSPORT LOCK	1
44	121393GT	MACHINED BACKLASH	1
45	121381GT	FORMING, COVER, SWIVEL to SN S85XCH-4183	1
46	56912GT	SPRING CLIP,1/4-20,.025-.15X.54,ZAG to SN S85XCH-4183	4
47	824078GT	SCREW,HHF,1/4-20X.75,8,ZAG to SN S85XCH-4183	4

307.1 Turntable Center Components

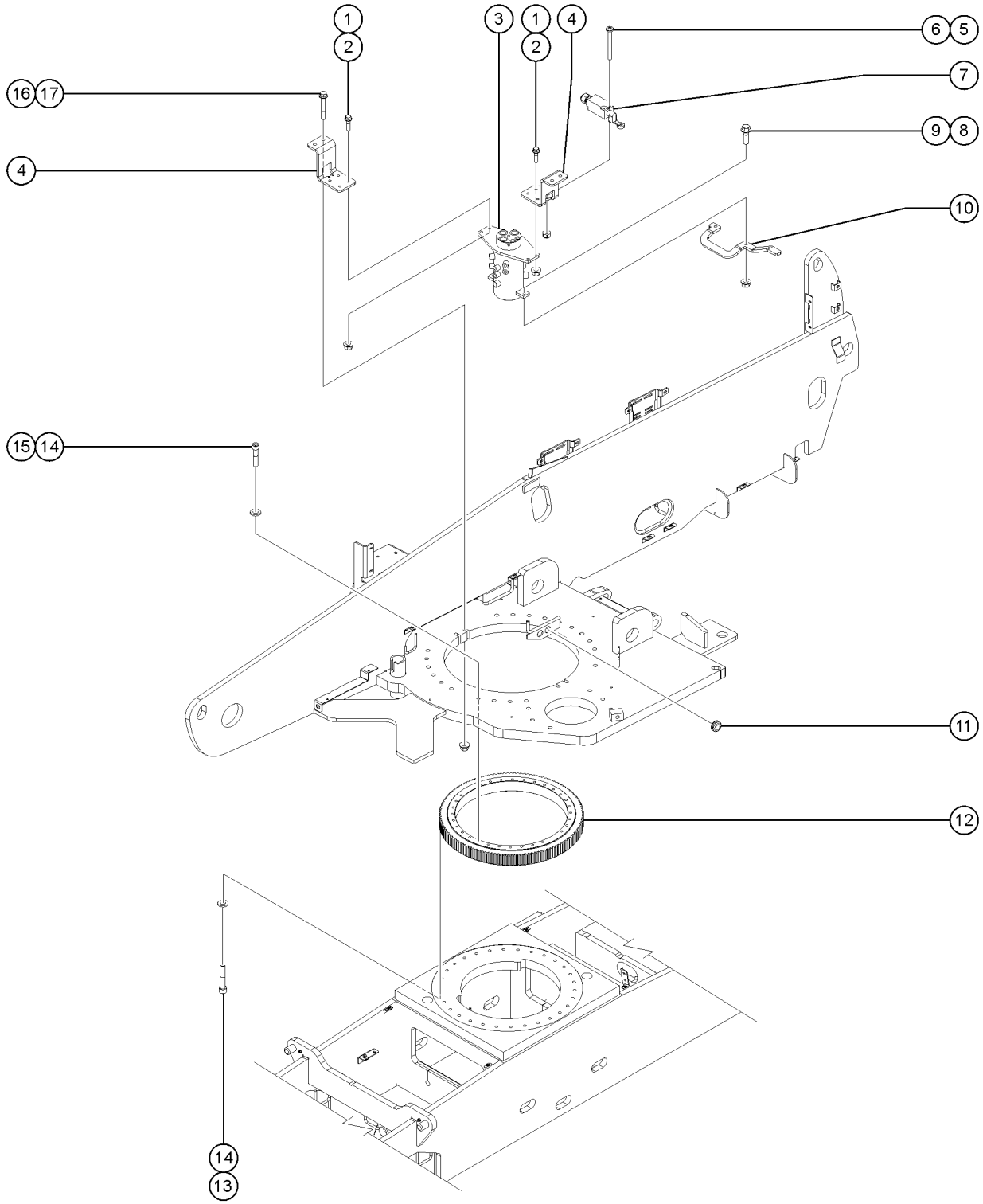

Item	Part No.	Description	Qty.
1	824092GT	SCREW, HHF, 3/8-16 X 1.5, 8, ZAG	4
2	1274322GT	NUT,NYLOCK FLG,3/8-16,F,ZAG	4
3	1280390GT	SWIVEL, HYD 8 PORT	1
3-	94937GT	SEAL KIT,8-PORT SWIVEL	
3-	T106954GT	SEAL, O-RING LIP	
3-	T106955GT	SEAL, POLY, CHAMFER	
3-	T106957GT	SEAL, CAP, NOTCHED	
3-	T106961GT	SEAL, O-RING ENERGIZER	
3-	T106962GT	SEAL, CAP, NOTCHED	
4	60575PGT	BRACKET,HYD.ROTATOR MOUNT MNT	2
5	1256177GT	SCREW,PHPM,10-32X1.75,ZAG	2
6	1274168GT	NUT,NYLOCK,10-32,A,ZAG	2
7		REF. HARNESS, LST10, S80/85 (Drive Enable Limit Switch) (refer to 311.1 or 312.1)	1
8	826171GT	SCREW,HHF,1/2-13X1.75,ZAG	2
9	1251997GT	NUT,TL FLG,1/2-13,G,ZAG	2
10	1274153GT	FORMING, SWIVEL STOP, NDL	1
11	826559GT	GROMMET,.875"ID,1.25"OD,.188"	2
12	50035GT	BEARING,TURNTABLE	1
12-	227785GT	BEARING TURNTABLE SEAL***	
12-	49189-6838GT	HOSE ASSY,FM SW,JIC,4-4 (not shown)	1
12-	48887GT	ELBOW,90D, 070202-4	1
12-	48885GT	CONNECTOR,BULKHEAD,FEMALE-4	1
12-	28646GT	ZERK,GREASE,1/8 NPT (located under function manifold, hyd tank side)	1
13	1268596GT	SCREW,SHC,5/8-11X3.5,A574,ZAG	30
14	1256182GT	WASHER,FLAT,5/8,F436,HRD,ZAG	52
15	824107GT	SCREW,SHC,5/8-11X3,A574,ZAG	22
16	1256851GT	SCREW,HHF,1/2-13X3.5,8,ZAG	4
17	1274172GT	NUT,NYLOCK FLG,1/2-13,G,ZAG	4

308.1 Ground Control Box - View 1, S-80 XC

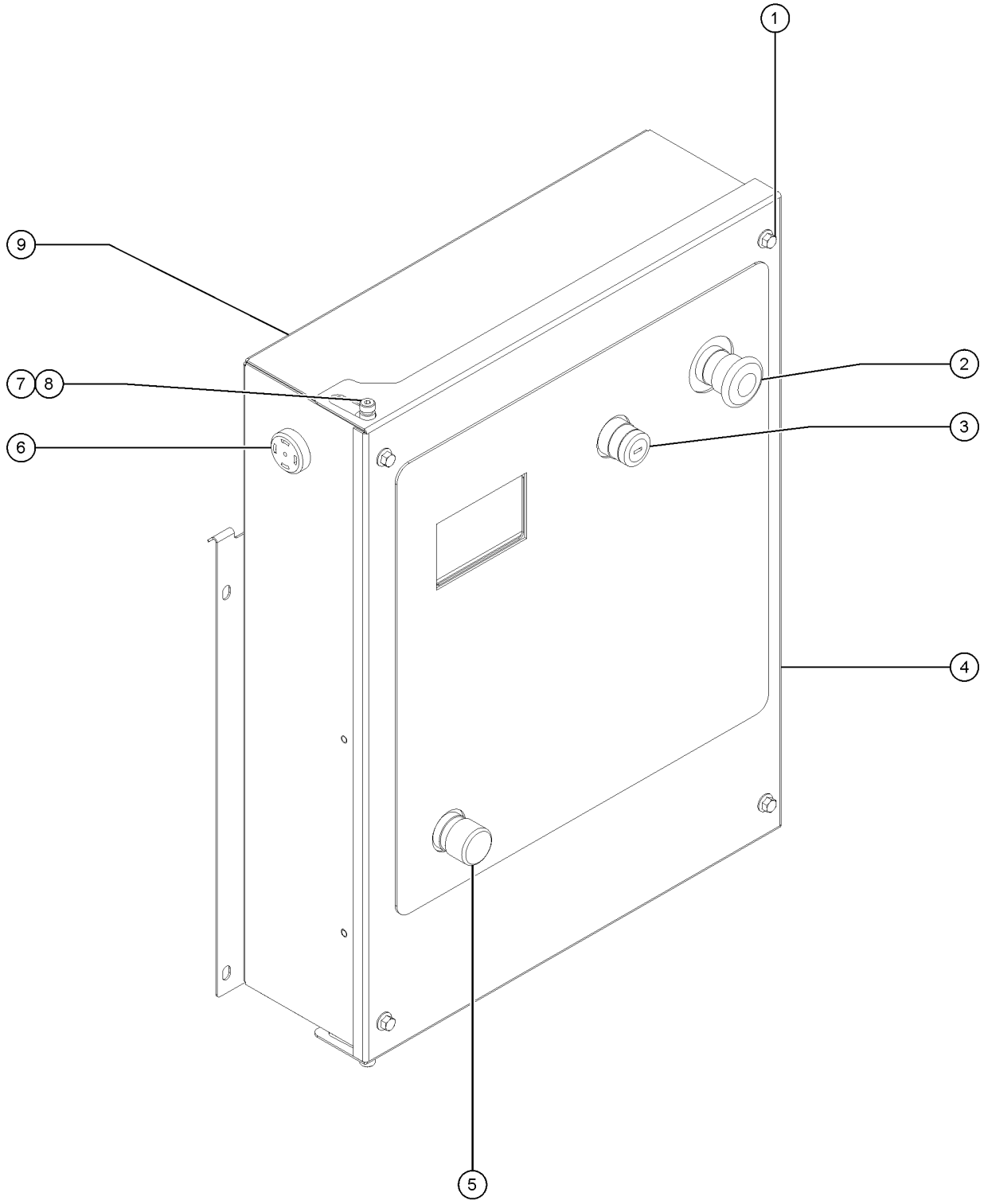

308.1 Ground Control Box - View 1, S-80 XC

Item	Part No.	Description	Qty.
A	1290459GT	ASSEMBLY, GBOX, S-BOOM, ALC600, TELEMATICS 2.0	
B	1288358GT	KIT, FE AND ESTOP PWR UPDATE, ALC600	
1	1256855GT	SCREW,HHF,1/4-20X.625,8,ZAG	4
2	66812GT	BUTTON,PUSH,RED MUSHROOM HEAD	1
2-	66817GT	E-STOP W/ NC CONTACT	
2-	66818GT	CONTACT,NC	
3	66811GT	KEYSWITCH,3POS.MNTND.DR WKEY**	1
3-	66817GT	E-STOP W/ NC CONTACT	
3-	66818GT	CONTACT,NC	
3-	66816GT	CONTACT,N.O.***	
4	1275937GT	WELDMENT LID TCON ALC600	1
5	66813GT	BUTTON,PUSH,BLACK W/SEAL***	1
5-	66821GT	BASE,WITHOUT CONTACTS	
5-	66816GT	CONTACT,N.O.***	
6	39540GT	ALARM, STEADY TONE***	1
6-	72326GT	NUT - PLASTIC, RING FOR ALARMS	
7	1257410GT	BOLT,SHS,5/16X.375X1/4-20,ZAG	2
8	218449GT	WASHER,SHOULDER,NYLON	2
9	1275939GT	WELDMENT, BOX, TCON, ALC600	1

308.2 Ground Control Box - View 1, S-85 XC

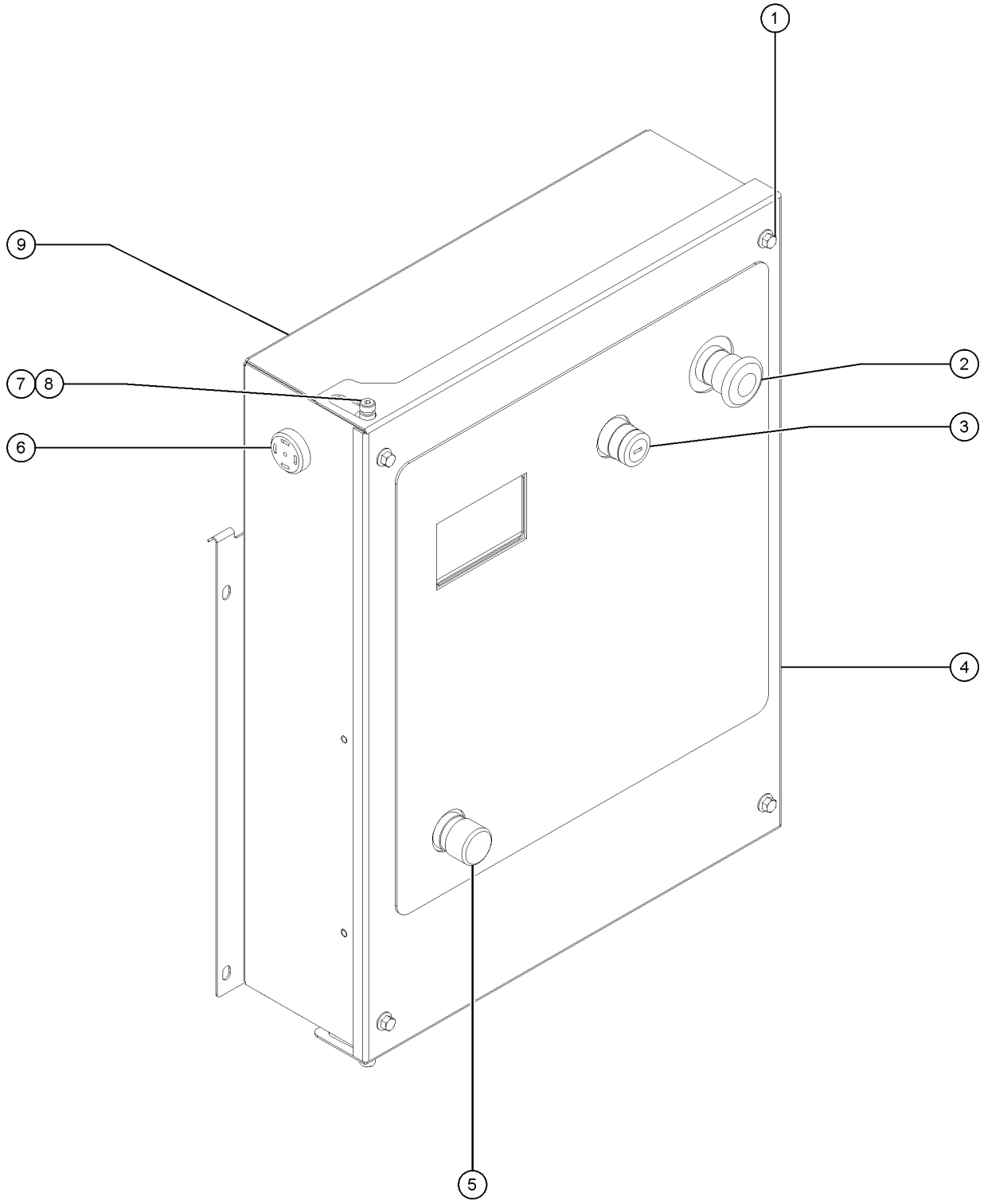

308.2 Ground Control Box - View 1, S-85 XC

Item	Part No.	Description	Qty.
A	1290460GT	ASSEMBLY, GBOX, S-BOOM, JIB, ALC600, TELEMATICS 2.0	
B	1288358GT	KIT, FE AND ESTOP PWR UPDATE, ALC600	
1	1256855GT	SCREW,HHF,1/4-20X.625,8,ZAG	4
2	66812GT	BUTTON,PUSH,RED MUSHROOM HEAD	1
2-	66817GT	E-STOP W/ NC CONTACT	
2-	66818GT	CONTACT,NC	
3	66811GT	KEYSWITCH,3POS.MNTND.DR WKEY**	1
3-	66817GT	E-STOP W/ NC CONTACT	
3-	66818GT	CONTACT,NC	
3-	66816GT	CONTACT,N.O.***	
4	1275937GT	WELDMENT LID TCON ALC600	1
5	66813GT	BUTTON,PUSH,BLACK W/SEAL***	1
5-	66821GT	BASE,WITHOUT CONTACTS	
5-	66816GT	CONTACT,N.O.***	
6	39540GT	ALARM, STEADY TONE***	1
6-	72326GT	NUT - PLASTIC, RING FOR ALARMS	
7	1257410GT	BOLT,SHS,5/16X.375X1/4-20,ZAG	2
8	218449GT	WASHER,SHOULDER,NYLON	2
9	1275939GT	WELDMENT, BOX, TCON, ALC600	1

309.1 Ground Control Box - View 2

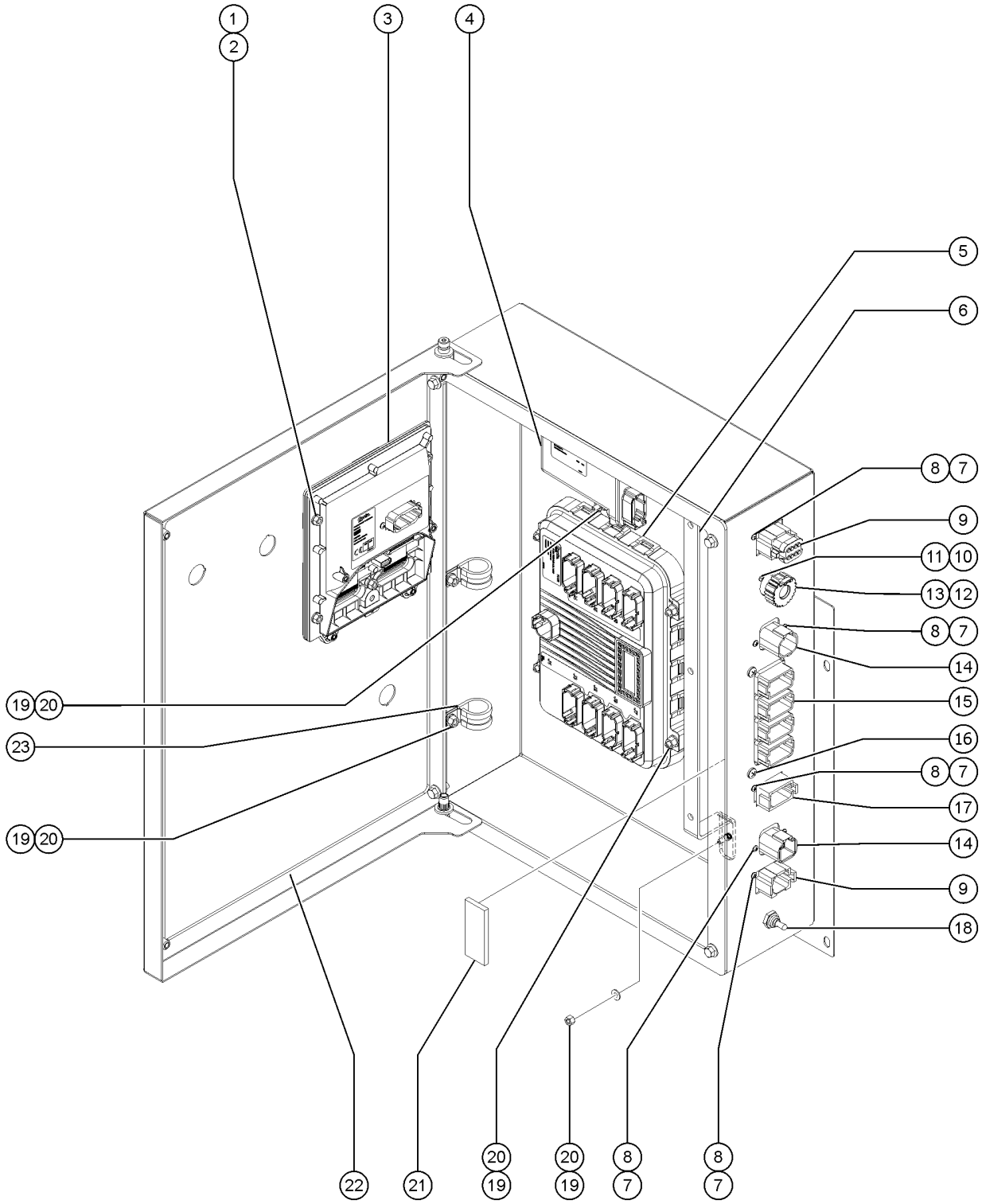

309.1 Ground Control Box - View 2

Item	Part No.	Description	Qty.
1	1274175GT	NUT,NYLOCK,8-32,A,ZAG	5
1-	1271081GT	NUT,NYLOCK,8-32,8,ZAG	
2	1257390GT	WASHER,FLAT,#8,SAE,ZAG	5
3	1286640GT	KIT,DISCON ALC600	1
3-	1268327GT	ECU, DISPLAY CONTROLLER	
3-	1268322GT	GASKET, RIBBON, DISCON	
3-	1268651GT	CABLE, FLAT FLEX, 30 POS 1MMX3"	
4	1280589GT	MODULE, RECOVERY to SN S85XCH-3267	1
5	1284523GT	ECU,TURNTABLE,S-XC,PROGRAMMED	1
5-	1288795GT	ECU, TURNTABLE, S-XC, ALC600	1
5-	1302966GT	SOFTWARE, APPLICATION, S-XC/S-J, ALC600	1
6	119644GT	BRACKET,PBOX WIRE SUPPORT	1
7	824214GT	SCREW,PHPM,6-32X.50,ZAG	10
8	1274164GT	NUT,NYLOCK,6-32,A,ZAG	10
9	87755GT	CONN, RECEP, 8 WAY, DEUTSCH, DT, GRAY/FLANGE (UPPER PORT FOR TELEMATICS) (LOWER PORT FOR BOOM CABLE)	2
9-	1258768GT	CONN,PLUG 8WAY,BLOCKED GROMMET	
9-	60757GT	PLUG, SEAL, 12-18GA	
10	1253477GT	SCREW,PHPM,4-40X.5,ZAG	2
11	1283012GT	NUT,NYLOCK,4-40,2,ZAG	2
12	1272123GT	DUST CAP, RECEPTACLE, 5 WAY, CIRCULAR (SERVICE PORT)	1
13	1272122GT	CONN, RECEP, 5 WAY, DEUTSCH, HD10	1
14	73717GT	CONN, RECEP, 4 WAY, DEUTSCH, DTP, FLANGE (UPPER PORT FOR POWER) (LOWER PORT FOR BOOM CABLE)	2
15	73736GT	CONN,RECEP 48 WAY,4 X 12 (ENGINE AND FUNCTION MANIFOLD)	1
16	824226GT	SCREW,PHPSH,#12-11X.75,ZAG	4
17	73730GT	CONN, RECEP, 12 WAY, DEUTSCH, DT, GRAY/FLANGE (SENSORS)	1
18	128203GT	SWITCH TOGGLE ASSY SPDT 2P MOM (RECOVERY SWITCH) to SN S85XCH-3267	1
18B	128201GT	SWITCH TOGGLE ASSY DPDT 2P MOM from SN S85XCH-3268	1
19	1274168GT	NUT,NYLOCK,10-32,A,ZAG	10

309.1 Ground Control Box - View 2

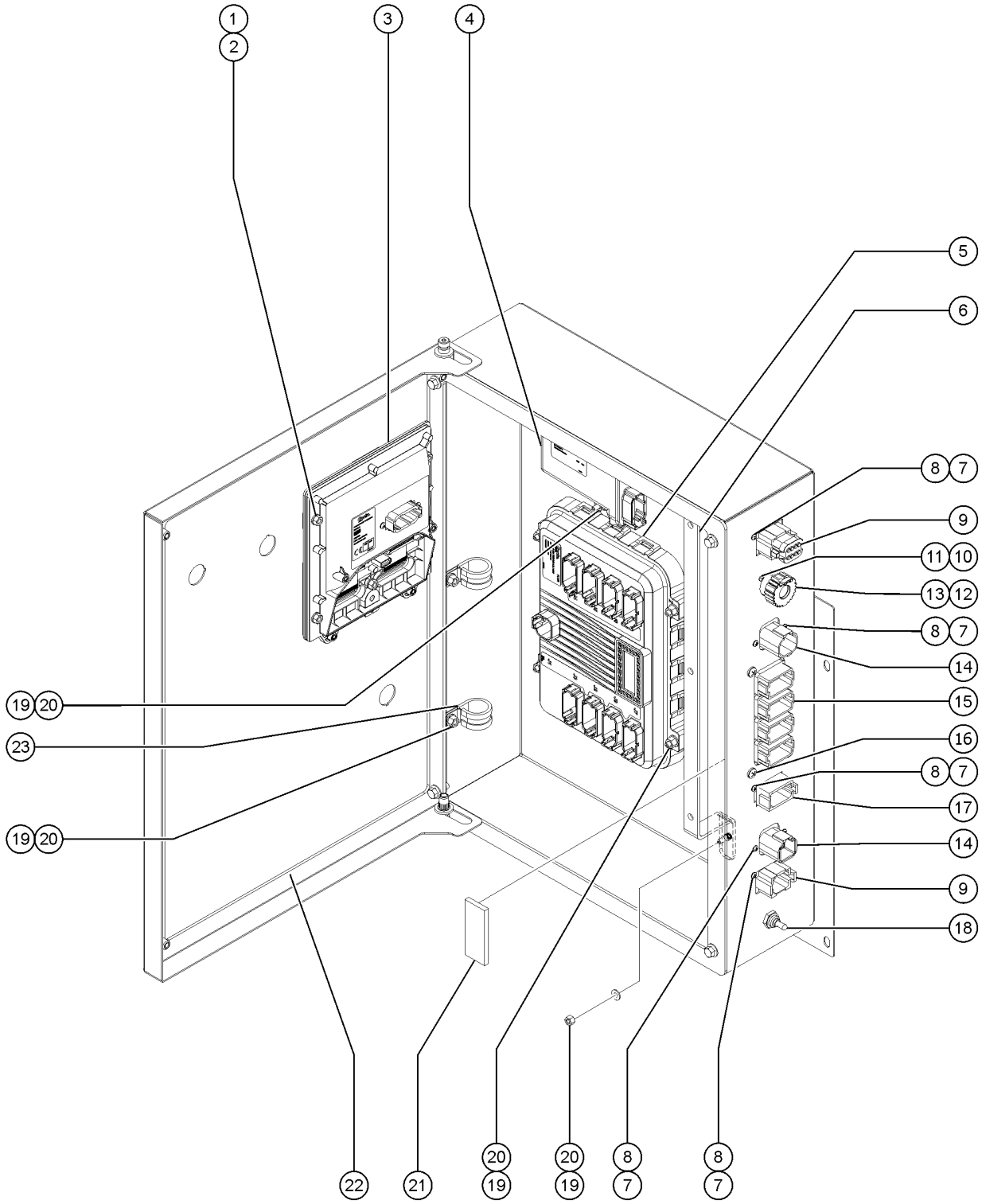

309.1 Ground Control Box - View 2

Item	*Part No.*	*Description*	*Qty.*
20	1253185GT	WASHER,FLAT,#10,USS,ZAG	10
21	30997GT	CORROSION INHIBITOR,FOAM to SN S85XCH-9758	1
22	1277169GT	GASKET GBOX ALC600	1
23	18666GT	CLAMP,1.00,#16 X 1/4,RUB CUSH	2

310.1 Turntable Counterweight, S-80 XC

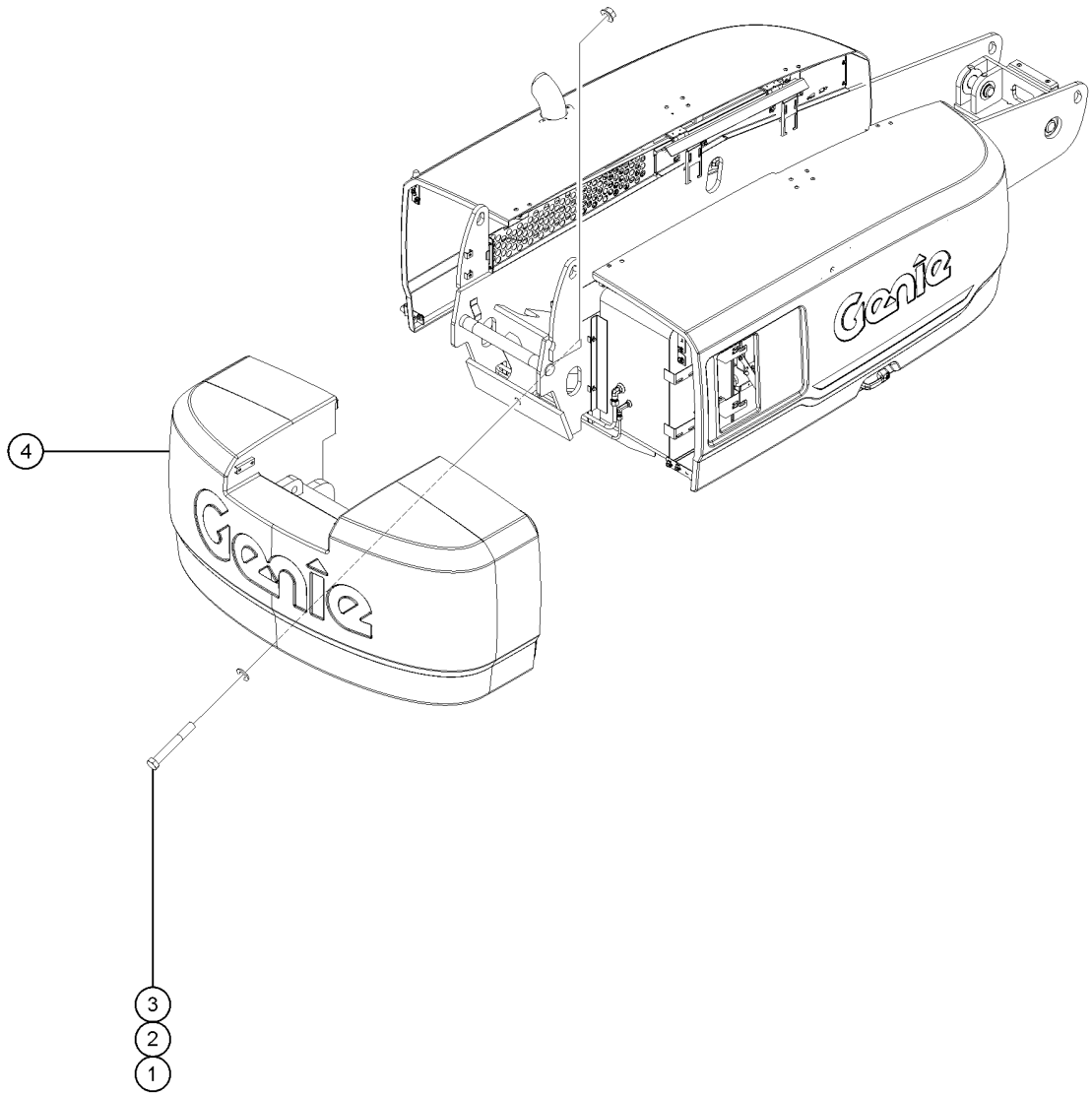

Item	*Part No.*	*Description*	*Qty.*
1	1258563GT	SCREW,HHC,1-8X7,8,ZAG	1
2	824116GT	WASHER,FLAT,1.0,F436,HRD,ZAG	1
3	824031GT	NUT,TL FLG,1-8,G,ZAG	1
4	1272957GT	COUNTERWEIGHT, S80 XC (S-80 XC) (12,200+/- 100 lbs / 5534+/- 45 kg)	1

310.2 Turntable Counterweight, S-85 XC

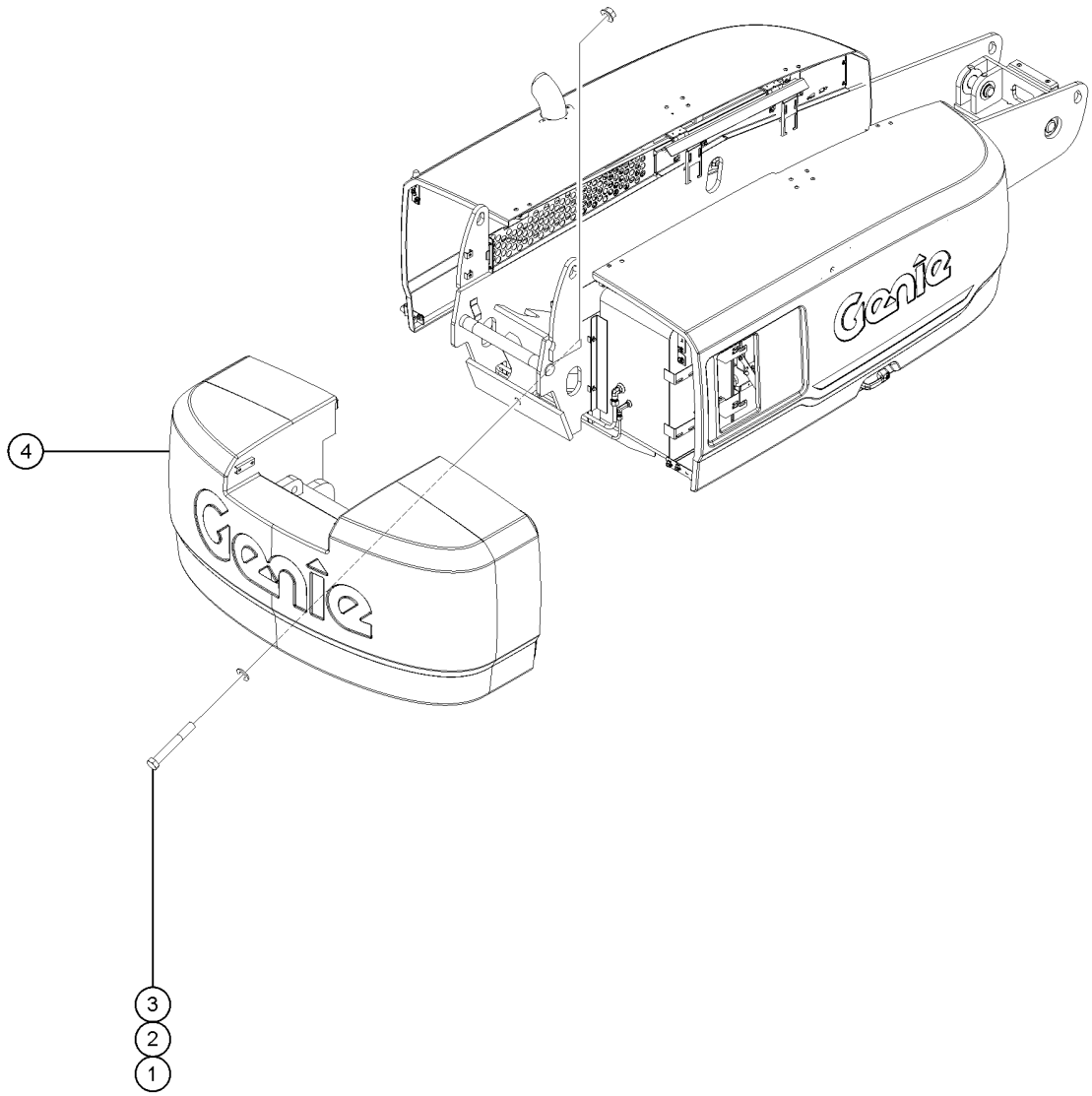

Item	*Part No.*	*Description*	*Qty.*
1	1258563GT	SCREW,HHC,1-8X7,8,ZAG	1
2	824116GT	WASHER,FLAT,1.0,F436,HRD,ZAG	1
3	824031GT	NUT,TL FLG,1-8,G,ZAG	1
4	1272957GT	COUNTERWEIGHT, S80 XC (S-85 XC) (12,200+/- 100 lbs / 5534+/- 45 kg)	1

311.1 Wire Harness Diagram, S-80 XC

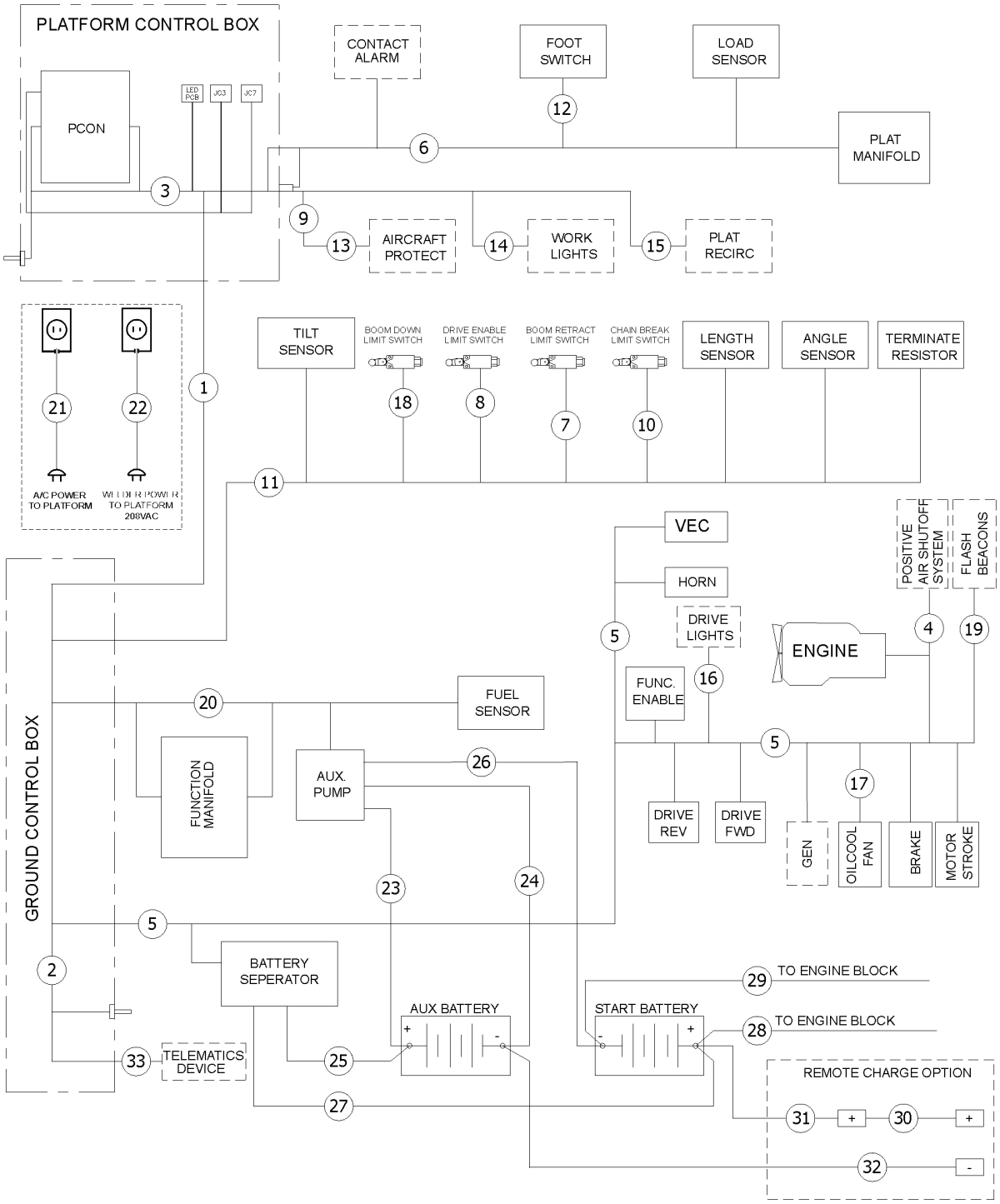

Item	Part No.	Description	Qty.
-		Ref. Wire Harness Assembly For the S-85 XC Wire Harness Diagram (Refer to 312.1)	
1	1269743GT	CABLE, BOOM, COMPOSITE, S80XC (Refer to 311_101)	1
2-	1290501GT	HARNESS, GBOX, ALC600, TELEMATICS 2.0 (Refer to 311_102A)	1
3	1306212GT	HARNESS, PBOX, ALC600, XC, EPL (Refer to 311_103)	1
4	1290849GT	HARNESS, CONTROL, PASS (Refer to 311_104)	1
5	1269698GT	HARNESS, ENGINE, PERKINS404D (Refer to 311_105) (Perkins 404D-22T)	1
5A	1269699GT	HARNESS,ENGINE, DEUTZ2.9T (Refer to 311_105A) (Deutz TD 2.9L4)	1
5B	1269700GT	HARNESS,ENGINE, DEUTZ2011 (Refer to 311_105B) (Deutz TD2011L04i)	1
5C	1269701GT	HARNESS, ENGINE, GM3.0 (Refer to 311_105C) (GM 3.0L)	1
5C-	1284757GT	BOOT, PLUG, 4 WAY, DTP, GY (part of harness 1269701GT)	1
5C-	1284724GT	BOOT, RECEP, 12 WAY, DT, GY (part of harness 1269701GT)	1
5D		HARNESS, DEUTZ 2.2 TIER IV, S80/85 XC (Refer to 311_105D) (Deutz 2.2 TIRE IV), (no longer available)	1
5E	1290930GT	HARNESS, DEUTZ 2.2 STAGE V, S80/85 XC (Refer to 311_105E) (Deutz 2.2 Stage V)	1
6	1306608GT	HARNESS, PLATFORM, MANIFOLD, ALC600, EPL (Refer to 311_106)	1
7	1269714GT	HARNESS, LSB1RS, S80/85 (Refer to 311_107) (Boom Retract Limit Switch)	1
8	1269715GT	HARNESS LST1O S80/85 (Refer to 311_108) (Drive Enable Limit Switch)	1
9	1269734GT	HARNESS, PROX, MANIFOLD, PLAT (Refer to 311_109)	1
10	1269717GT	HARNESS, LSB2S, S80/85 (Refer to 311_110) (Chain Break Limit Switch)	1
11	1274449GT	HARNESS, BOOM SENSORS (Refer to 311_111)	1
12	227618GT	ASSEMBLY,FOOTSWITCH (Refer to 311_112)	1
13	1269721GT	HARNESS, PROX SENSOR,ACP (Refer to 311_113)	1
14	1269720GT	HARNESS, LIGHTS, WORK (Refer to 311_114)	2
15	1269722GT	HARNESS, RECIRCULATION, PLAT (Refer to 311_115)	1
16	1269724GT	HARNESS, LIGHTS, DRIVE (Refer to 311_116)	1
17	1269725GT	HARNESS COOLER HYDRAULIC (Refer to 311_117) (standard)	1
17-	1254360GT	HARNESS, OIL COOLER, LIFT POWER (Refer to 311_117A) (generator option)	1
18	1306209GT	HARNESS, LIMIT SWITCH ASSY, LST3S, S80/85XC, EPL (Refer to 311_118) (Boom Down Limit Switch)	1
19	1269729GT	HARNESS,BEACONS,FLASHING (Refer to 311_119)	1

311.1 Wire Harness Diagram, S-80 XC

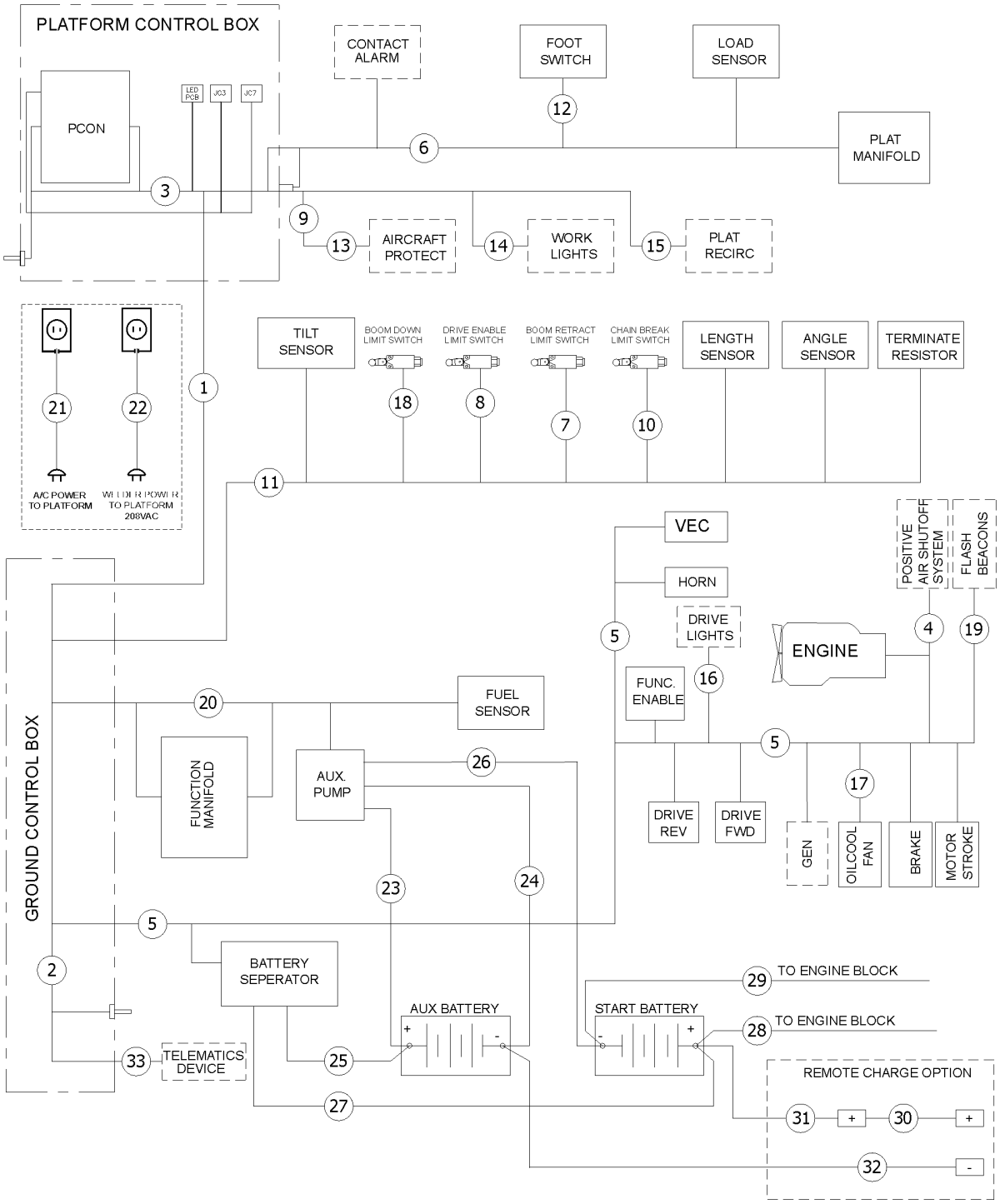

Item	Part No.	Description	Qty.
20	1269731GT	HARNESS MANIFOLD FUNCTION S80/85 (Refer to 311_120)	1
21	1296206GT	CABLE, POWER TO PLAT, S80 XC, 12/3 CABLE	1
22	106115GT	WIRE CABLE 8 GA/4 CON.SO	1192 Inches
23	121619GT	HARNESS,BATT2 TO APU(+),S80 (Refer to 311_123)	1
24	121622GT	HARNESS,BATT2 TO APU(-),S80 (Refer to 311_124)	1
25	1279680GT	ASSEMBLY WIRE SEPARATOR BATTERY A (Refer to 311_125)	1
26	1274452GT	HARNESS BATTERY NEGATIVE (Refer to 311_126)	1
27	1279679GT	ASSEMBLY WIRE SEPARATOR BATTERY M (Refer to 311_127)	1
28	121474GT	BATTERY CABLE,2/0,POS,RD,123" (Refer to 311_128)	1
28-	826138GT	CABLE, BATTERY POS RED 136" (Refer to 311_128A)	1
29	1281128GT	CABLE, BATTERY BLACK 2/0 122" (Refer to 311_129)	1
29-	1279875GT	CABLE, BATTERY BLACK 2/0 128" (Refer to 311_129A)	1
30	1269051GT	CABLE ASSY, RED 2/0 (Refer to 311_130)	1
31	1269060GT	CABLE, RED 2/0, 20" (Refer to 311_131)	1
32	1269061GT	CABLE ASSY, BLACK 2/0 (Refer to 311_132)	1
33	1292346GT	HARNESS,HERTZ GPS,8" (Refer to 311_133)	1
33A	1294289GT	HARNESS, TELEMATICS, TOPCON, 17IN (Refer to 311_133A)	1
33B	1292180GT	HARNESS, TELEMATICS, M8, ZTR (Refer to 311_133B)	1
33C	1261655GT	HARNESS,TELEMATICS,ZTR,M5S (Refer to 311_133C)	1
33D	1281095GT	ASSEMBLY,TELEMATICS, TTU 2830 (Refer to 311_133D)	1

311.101 Cable, Boom, Composite, S80XC



311.101 Cable, Boom, Composite, S80XC

Item	*Part No.*	*Description*	*Qty.*
-	1269743GT	CABLE, BOOM, COMPOSITE, S80XC For the S-85 XC Wire Harness Diagram (Refer to 312.1)	1
1	60527GT	CONN, PLUG, 4 WAY, DEUTSCH, DTP (Refer to 311_101)	2
1-	60532GT	LOCK,PLUG 2 WAY,12-14GA (Refer to 311_102)	2
2	39908GT	WIRE LOOM,1/2 DIA. (Refer to 311_102A)	19 Inches
3	119060GT	CONN, PLUG, 8 WAY, DEUTSCH, DT, ENDCAP/ GRAY (Refer to 311_103)	2
3-	60433GT	LOCK,PLUG 8 WAY, 14-18GA (Refer to 311_104)	2

311.102 Harness Gbox ALC600, Telematic 2, HW

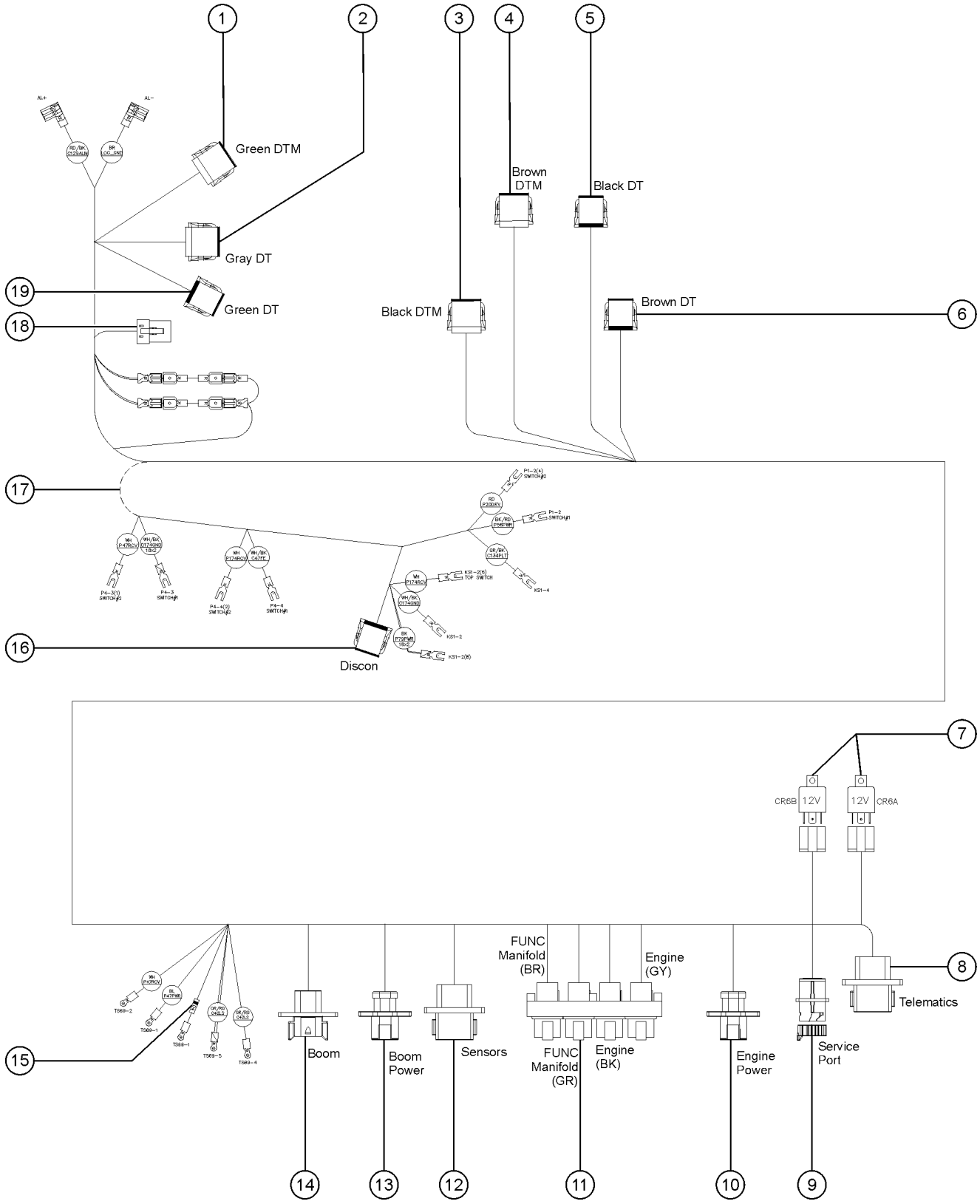

311.102 Harness Gbox ALC600, Telematic 2, HW

Item	Part No.	Description	Qty.
-	1309207GT	HARNESS GBOX, ALC600, TELEMATIC 2, HW	1
1	822250GT	CONN,PLUG 12C WAY DTM 18-20GA	1
1-	88332GT	LOCK,PLUG 12 WAY DTM 18-20GA	1
2	119061GT	CONN, PLUG, 12 WAY, DEUTSCH, DT, GRAY	1
2-	60435GT	LOCK, PLUG 12WAY, 14-18GA, GRN	1
3	106780GT	CONN, PLUG, 12 WAY, DEUTSCH, DTM, BLACK, KEY-B	1
3-	88332GT	LOCK,PLUG 12 WAY DTM 18-20GA	1
4	1258100GT	CONN,PLUG 12D WAY DTM 18-20GA	1
4-	88332GT	LOCK,PLUG 12 WAY DTM 18-20GA	1
5	119062GT	CONN, PLUG, 12 WAY, DEUTSCH, DT, BLACK	1
5-	60435GT	LOCK, PLUG 12WAY, 14-18GA, GRN	1
6	119064GT	CONN PLUG 12 WAY ENDCAP DT BR	1
6-	60435GT	LOCK, PLUG 12WAY, 14-18GA, GRN	1
7	1310252GT	CONNECTOR, RELAY SOCKET, 5PIN	2
7-	19274GT	RELAY,SPDT,12V(AUTO)**	2
8	73730GT	CONN, RECEP, 12 WAY, DEUTSCH, DT, GRAY/FLANGE	1
8-	54255GT	LOCK, RECEP 12WAY, 14-18GA	1
9	1272122GT	CONN, RECEP, 5 WAY, DEUTSCH, HD10	1
9-	1272123GT	DUST CAP, RECEPTACLE, 5 WAY, CIRCULAR	1
10	73717GT	CONN, RECEP, 4 WAY, DEUTSCH, DTP, FLANGE	1
10-	60526GT	LOCK,RECEP 4 WAY,12-14GA	1
11	73736GT	CONN,RECEP 48 WAY,4 X 12	1
11-	54255GT	LOCK, RECEP 12WAY, 14-18GA	4
12	73730GT	CONN, RECEP, 12 WAY, DEUTSCH, DT, GRAY/FLANGE	1
12-	54255GT	LOCK, RECEP 12WAY, 14-18GA	1
13	73717GT	CONN, RECEP, 4 WAY, DEUTSCH, DTP, FLANGE	1
13-	60526GT	LOCK,RECEP 4 WAY,12-14GA	1
14	87755GT	CONN, RECEP, 8 WAY, DEUTSCH, DT, GRAY/FLANGE	1

311.102 Harness Gbox ALC600, Telematic 2, HW

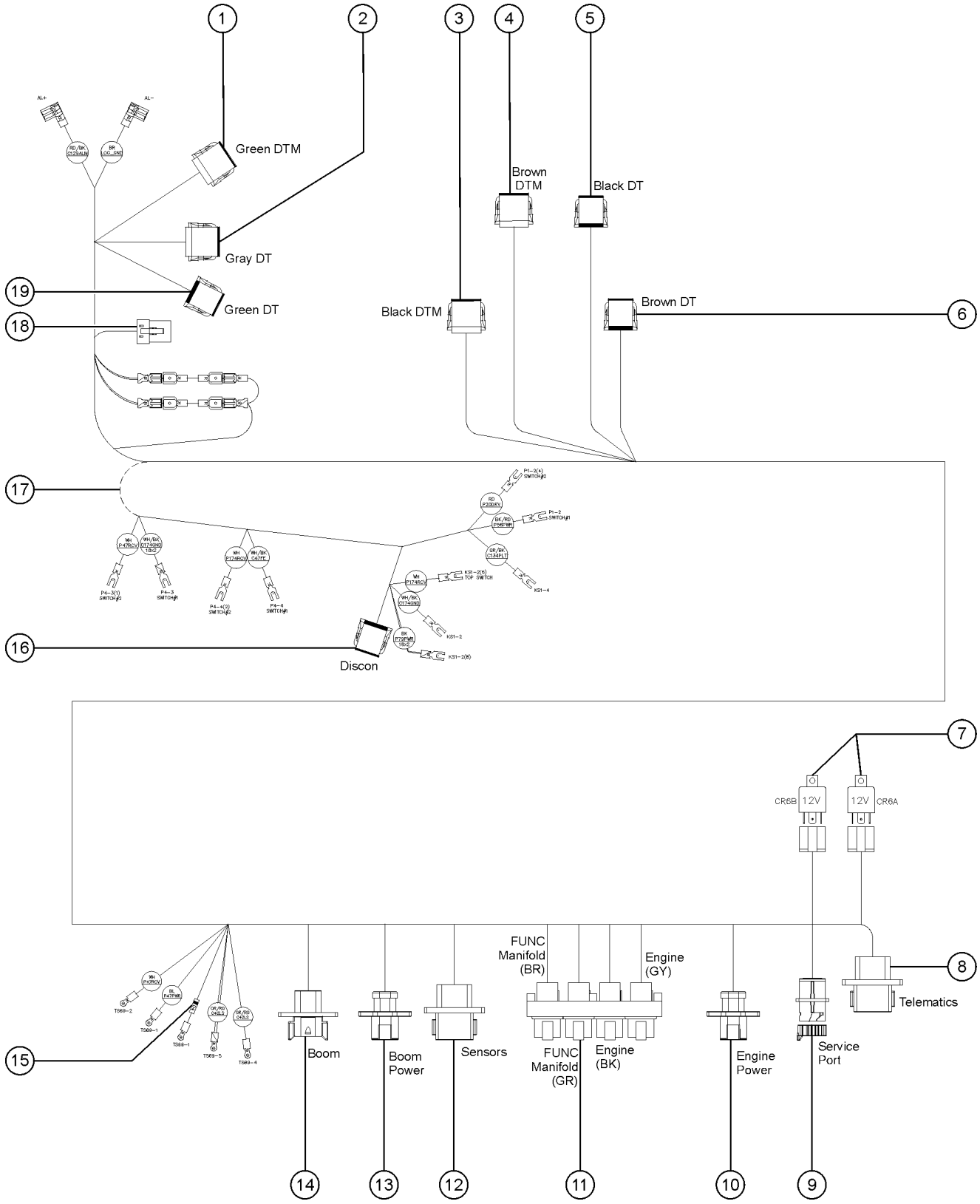

311.102 Harness Gbox ALC600, Telematic 2, HW

Item	Part No.	Description	Qty.
14-	60447GT	LOCK,RECEP 8 WAY,14-18GA	1
15	56445GT	DIODE,6 AMP 200 PIV,REEL	4
16	88331GT	CONN, PLUG, 12 WAY, DEUTSCH, DTM, GRAY, KEY-A	1
16-	88332GT	LOCK,PLUG 12 WAY DTM 18-20GA	1
17	94652GT	WIRE LOOM,1/2DIA.SLIT HI-TEMP*	8.5 Inches
18	60527GT	CONN, PLUG, 4 WAY, DEUTSCH, DTP	1
18-	60528GT	LOCK,PLUG 4 WAY,12-14GA***	1
19	119063GT	CONN PLUG 12 WAY ENDCAP DT GR	1
19-	60435GT	LOCK, PLUG 12WAY, 14-18GA, GRN	1

311.102A Harness Gbox ALC600, Telematics 2.0

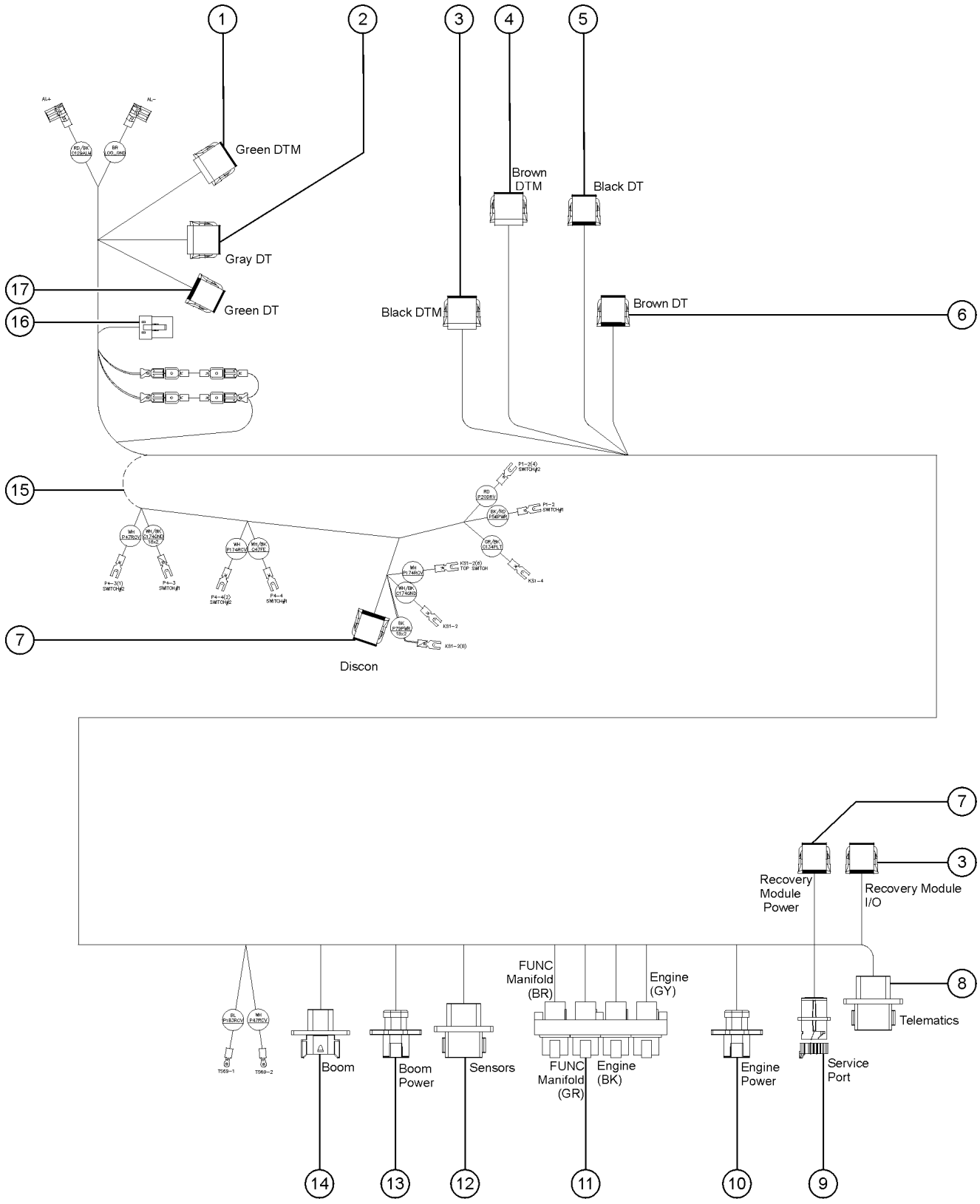

311.102A Harness Gbox ALC600, Telematics 2.0

Item	Part No.	Description	Qty.
-	1290501GT	HARNESS, GBOX, ALC600, TELEMATICS 2.0	1
1	822250GT	CONN,PLUG 12C WAY DTM 18-20GA	1
1-	88332GT	LOCK,PLUG 12 WAY DTM 18-20GA	1
2	119061GT	CONN, PLUG, 12 WAY, DEUTSCH, DT, GRAY	1
2-	60435GT	LOCK, PLUG 12WAY, 14-18GA, GRN	1
3	106780GT	CONN, PLUG, 12 WAY, DEUTSCH, DTM, BLACK, KEY-B	2
3-	88332GT	LOCK,PLUG 12 WAY DTM 18-20GA	2
4	1258100GT	CONN,PLUG 12D WAY DTM 18-20GA	1
4-	88332GT	LOCK,PLUG 12 WAY DTM 18-20GA	1
5	119062GT	CONN, PLUG, 12 WAY, DEUTSCH, DT, BLACK	1
5-	60435GT	LOCK, PLUG 12WAY, 14-18GA, GRN	1
6	119064GT	CONN PLUG 12 WAY ENDCAP DT BR	1
6-	60435GT	LOCK, PLUG 12WAY, 14-18GA, GRN	1
7	88331GT	CONN, PLUG, 12 WAY, DEUTSCH, DTM, GRAY, KEY-A	2
7-	88332GT	LOCK,PLUG 12 WAY DTM 18-20GA	2
8	73730GT	CONN, RECEP, 12 WAY, DEUTSCH, DT, GRAY/FLANGE	1
8-	54255GT	LOCK, RECEP 12WAY, 14-18GA	1
9	1272122GT	CONN, RECEP, 5 WAY, DEUTSCH, HD10	1
9-	1272123GT	DUST CAP, RECEPTACLE, 5 WAY, CIRCULAR	1
10	73717GT	CONN, RECEP, 4 WAY, DEUTSCH, DTP, FLANGE	1
10-	60526GT	LOCK,RECEP 4 WAY,12-14GA	1
11	73736GT	CONN,RECEP 48 WAY,4 X 12	1
11-	54255GT	LOCK, RECEP 12WAY, 14-18GA	4
12	73730GT	CONN, RECEP, 12 WAY, DEUTSCH, DT, GRAY/FLANGE	1
12-	54255GT	LOCK, RECEP 12WAY, 14-18GA	1
13	73717GT	CONN, RECEP, 4 WAY, DEUTSCH, DTP, FLANGE	1
13-	60526GT	LOCK,RECEP 4 WAY,12-14GA	1
14	87755GT	CONN, RECEP, 8 WAY, DEUTSCH, DT, GRAY/FLANGE	1

311.102A Harness Gbox ALC600, Telematics 2.0

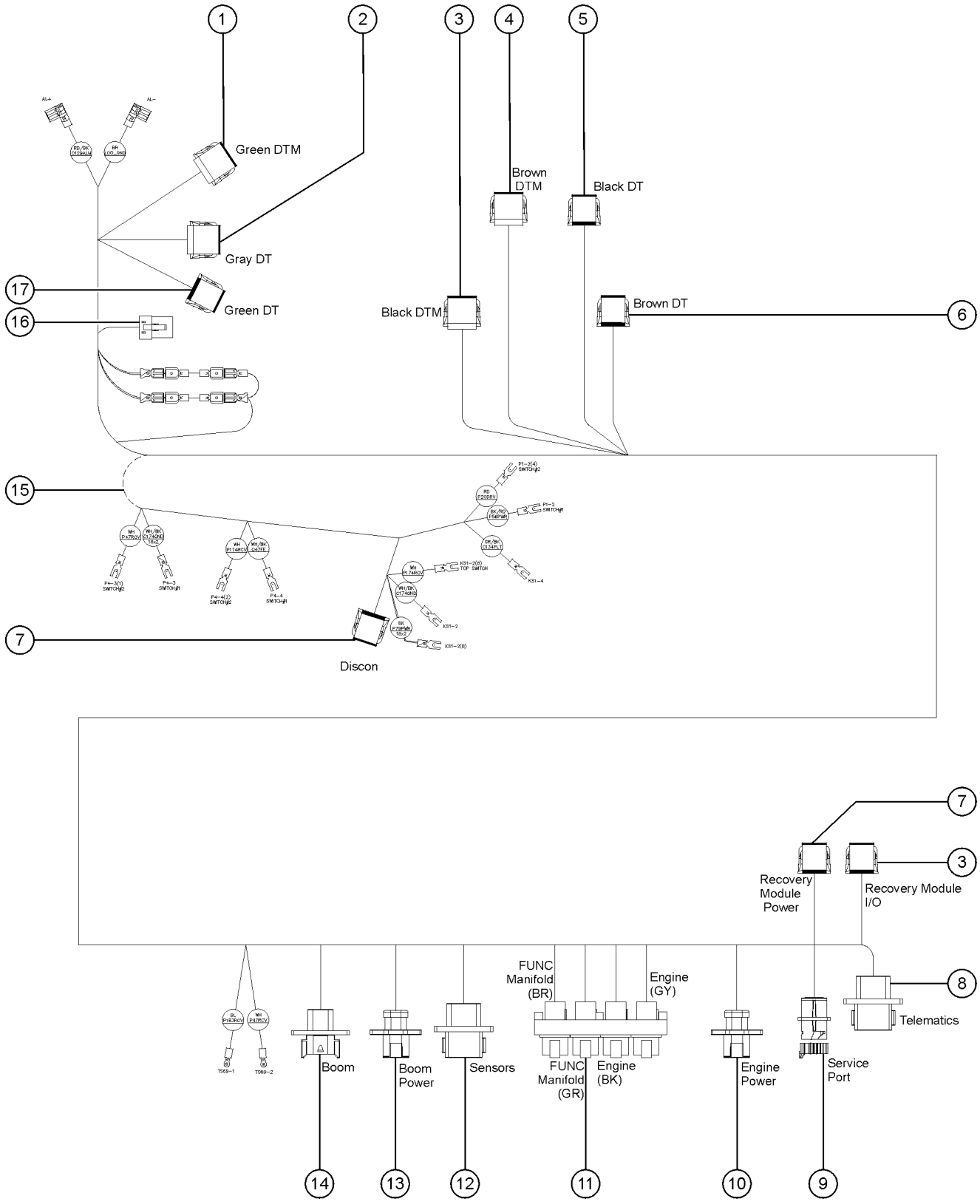

311.102A Harness Gbox ALC600, Telematics 2.0

Item	Part No.	Description	Qty.
14-	60447GT	LOCK,RECEP 8 WAY,14-18GA	1
15	94652GT	WIRE LOOM,1/2DIA.SLIT HI-TEMP*	8.5 Inches
16	60527GT	CONN, PLUG, 4 WAY, DEUTSCH, DTP	1
16-	60528GT	LOCK,PLUG 4 WAY,12-14GA***	1
17	119063GT	CONN PLUG 12 WAY ENDCAP DT GR	1
17-	60435GT	LOCK, PLUG 12WAY, 14-18GA, GRN	1

311.102B HARNESS GBOX, ALC600, TELEMATIC 2, HW

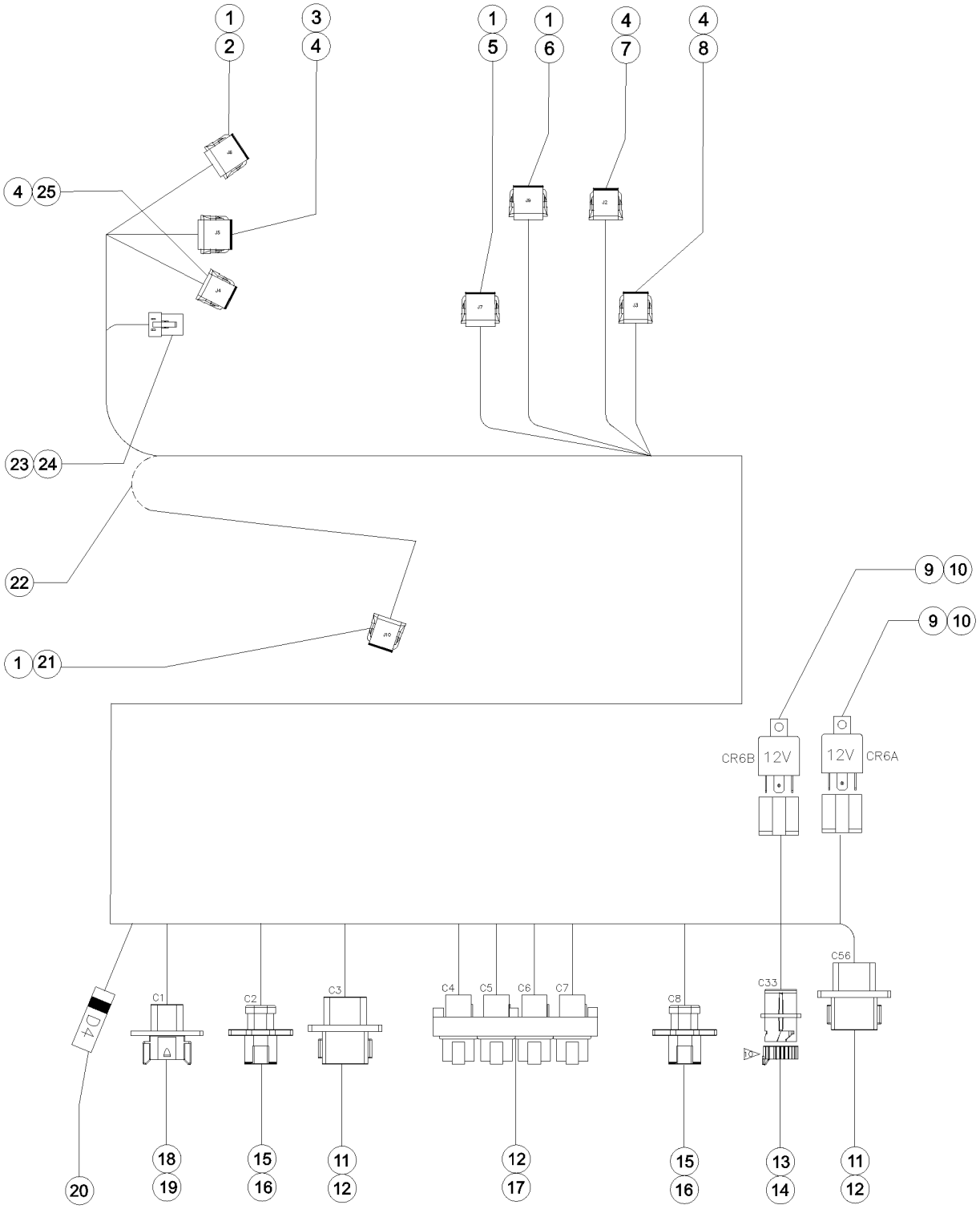

311.102B HARNESS GBOX, ALC600, TELEMATIC 2, HW

Item	Part No.	Description	Qty.
1	88332GT	LOCK,PLUG 12 WAY DTM 18-20GA	4
2	822250GT	CONN,PLUG 12C WAY DTM 18-20GA	1
3	119061GT	CONN, PLUG, 12 WAY, DEUTSCH, DT, GRAY	1
4	60435GT	LOCK, PLUG 12WAY, 14-18GA, GRN	4
5	106780GT	CONN, PLUG, 12 WAY, DEUTSCH, DTM, BLACK, KEY-B	1
6	1258100GT	CONN,PLUG 12D WAY DTM 18-20GA	1
7	119062GT	CONN, PLUG, 12 WAY, DEUTSCH, DT, BLACK	1
8	119064GT	CONN PLUG 12 WAY ENDCAP DT BR	1
9	19274GT	RELAY,SPDT,12V(AUTO)**	2
10	1310252GT	CONNECTOR, RELAY SOCKET, 5PIN	2
11	73730GT	CONN, RECEP, 12 WAY, DEUTSCH, DT, GRAY/FLANGE	2
12	54255GT	LOCK, RECEP 12WAY, 14-18GA	5
13	1272123GT	DUST CAP, RECEPTACLE, 5 WAY, CIRCULAR	1
14	1272122GT	CONN, RECEP, 5 WAY, DEUTSCH, HD10	1
15	73717GT	CONN, RECEP, 4 WAY, DEUTSCH, DTP, FLANGE	2
16	60526GT	LOCK,RECEP 4 WAY,12-14GA	2
17	73736GT	CONN,RECEP 48 WAY,4 X 12	1
18	60447GT	LOCK,RECEP 8 WAY,14-18GA	1
19	87755GT	CONN, RECEP, 8 WAY, DEUTSCH, DT, GRAY/FLANGE	1
20	56445GT	DIODE,6 AMP 200 PIV,REEL	4
21	88331GT	CONN, PLUG, 12 WAY, DEUTSCH, DTM, GRAY, KEY-A	1
22	94652GT	WIRE LOOM,1/2DIA.SLIT HI-TEMP* 8.5inch	1
23	60528GT	LOCK,PLUG 4 WAY,12-14GA***	1
24	60527GT	CONN, PLUG, 4 WAY, DEUTSCH, DTP	1
25	119063GT	CONN PLUG 12 WAY ENDCAP DT GR	1

311.103 Harness Pbox ALC600, XC,EPL

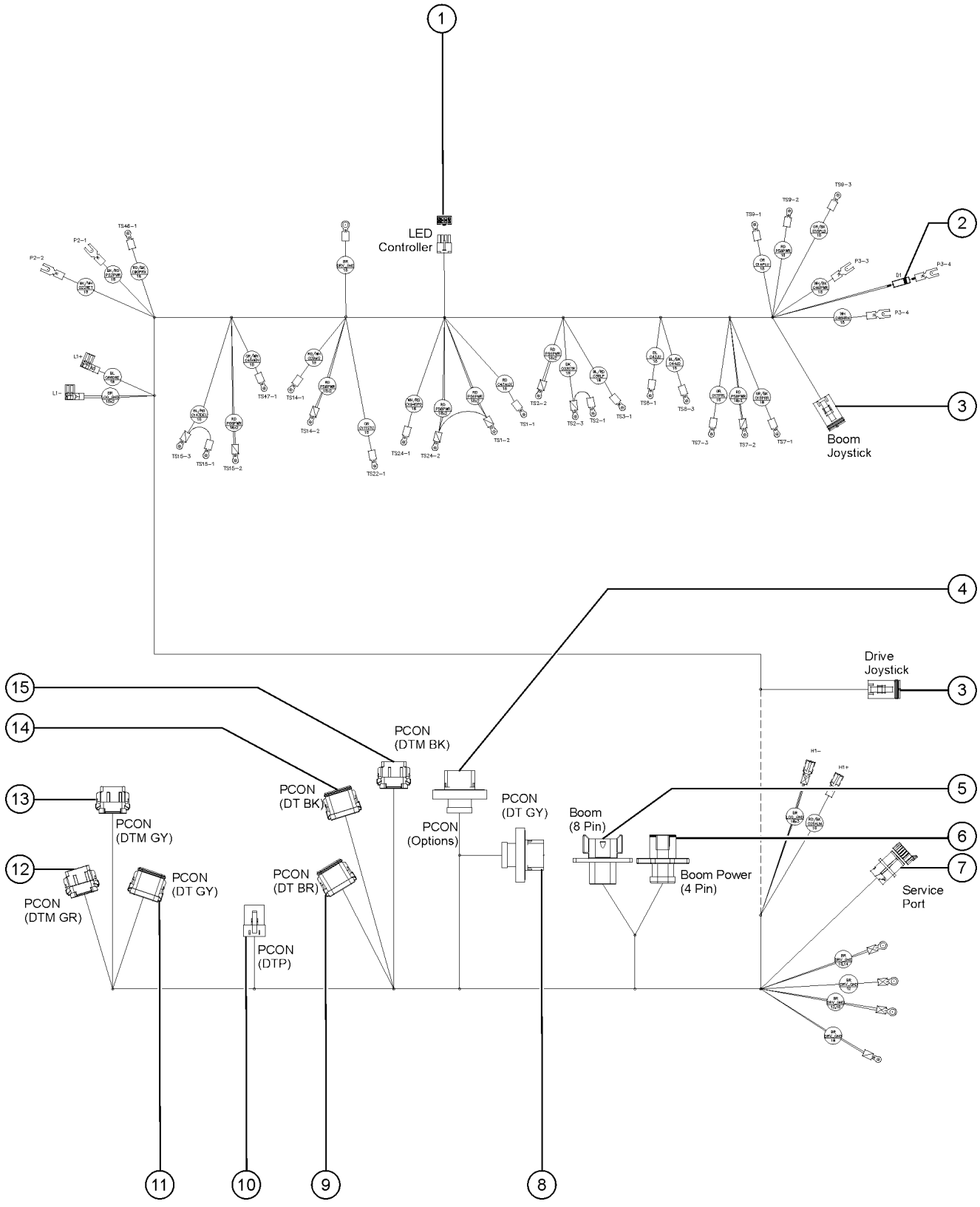

311.103 Harness Pbox ALC600, XC,EPL

Item	Part No.	Description	Qty.
-	1306212GT	HARNESS, PBOX, ALC600, XC, EPL	1
1	110654GT	CONN, PLUG, 8 WAY, MOLEX	1
2	56445GT	DIODE,6 AMP 200 PIV,REEL	
3	99343GT	CONNECTOR,PLUG 6 WAY 18-20 GA	2
3-	99344GT	LOCK,PLUG 6 WAY 18-20GA	2
4	226948GT	CONN, RECEP, 18 WAY, DEUTSCH, DTV, BLACK/FLANGE	1
4-	226388GT	LOCK,SECONDARY,DEUT,WV-18P	1
5	87755GT	CONN, RECEP, 8 WAY, DEUTSCH, DT, GRAY/FLANGE	1
5-	60447GT	LOCK,RECEP 8 WAY,14-18GA	1
6	73717GT	CONN, RECEP, 4 WAY, DEUTSCH, DTP, FLANGE	1
6-	60526GT	LOCK,RECEP 4 WAY,12-14GA	1
7	1272122GT	CONN, RECEP, 5 WAY, DEUTSCH, HD10	1
7-	1272123GT	DUST CAP, RECEPTACLE, 5 WAY, CIRCULAR	1
8	1265862GT	CONN, RECEP, 18 WAY, DEUTSCH, DTV, GRAY/FLANGE	1
8-	226388GT	LOCK,SECONDARY,DEUT,WV-18P	1
9	119064GT	CONN PLUG 12 WAY ENDCAP DT BR	1
9-	60435GT	LOCK, PLUG 12WAY, 14-18GA, GRN	1
10	60527GT	CONN, PLUG, 4 WAY, DEUTSCH, DTP	1
10-	60528GT	LOCK,PLUG 4 WAY,12-14GA***	1
11	119061GT	CONN, PLUG, 12 WAY, DEUTSCH, DT, GRAY	1
11-	60435GT	LOCK, PLUG 12WAY, 14-18GA, GRN	1
12	822250GT	CONN,PLUG 12C WAY DTM 18-20GA	1
12-	88332GT	LOCK,PLUG 12 WAY DTM 18-20GA	1
13	88331GT	CONN, PLUG, 12 WAY, DEUTSCH, DTM, GRAY, KEY-A	1
13-	88332GT	LOCK,PLUG 12 WAY DTM 18-20GA	1
14	119062GT	CONN, PLUG, 12 WAY, DEUTSCH, DT, BLACK	1
14-	60435GT	LOCK, PLUG 12WAY, 14-18GA, GRN	1
15	106780GT	CONN, PLUG, 12 WAY, DEUTSCH, DTM, BLACK, KEY-B	1

311.103 Harness Pbox ALC600, XC,EPL

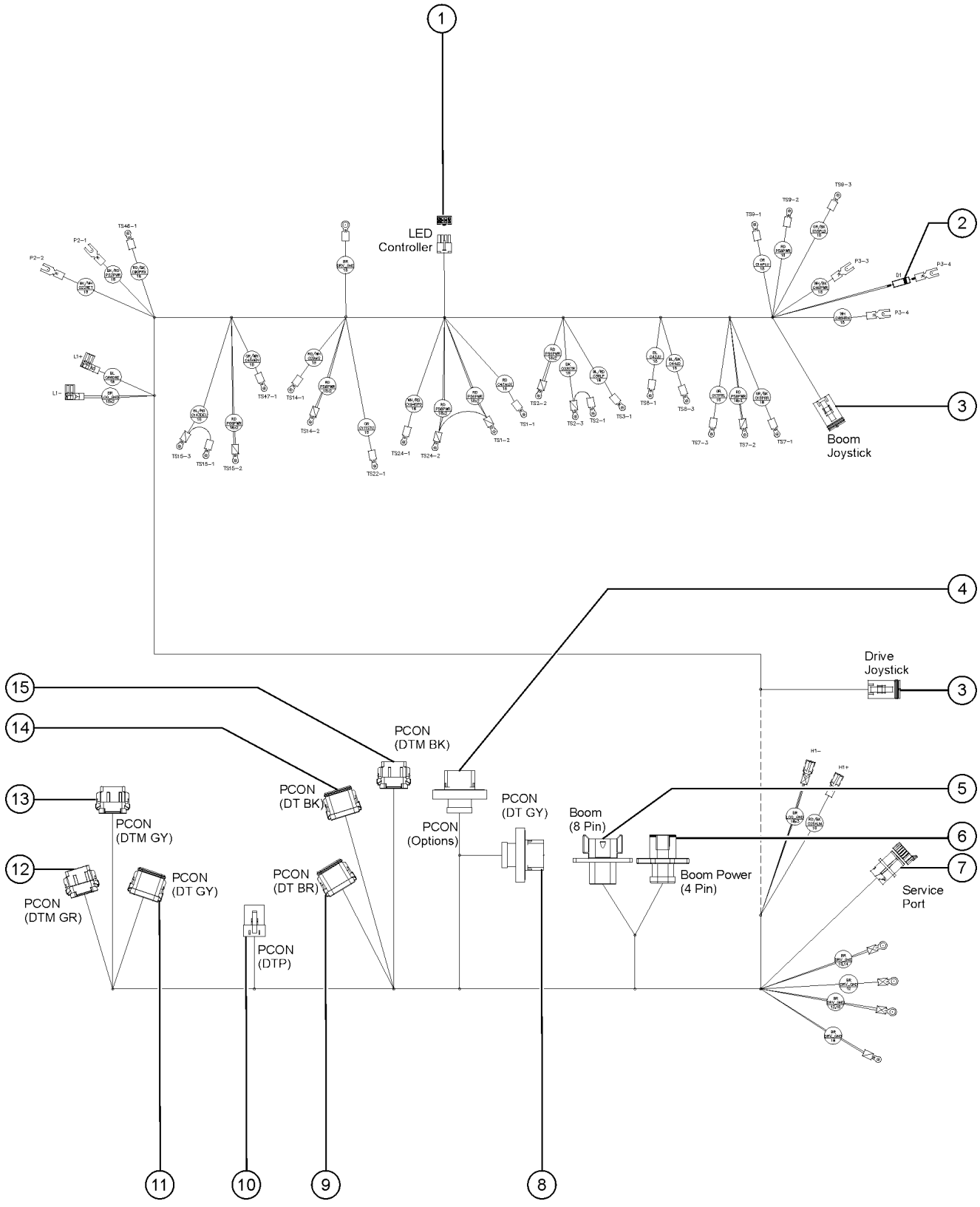

Item	Part No.	Description	Qty.
15-	88332GT	LOCK,PLUG 12 WAY DTM 18-20GA	1

311.104 Harness, Control, Pass

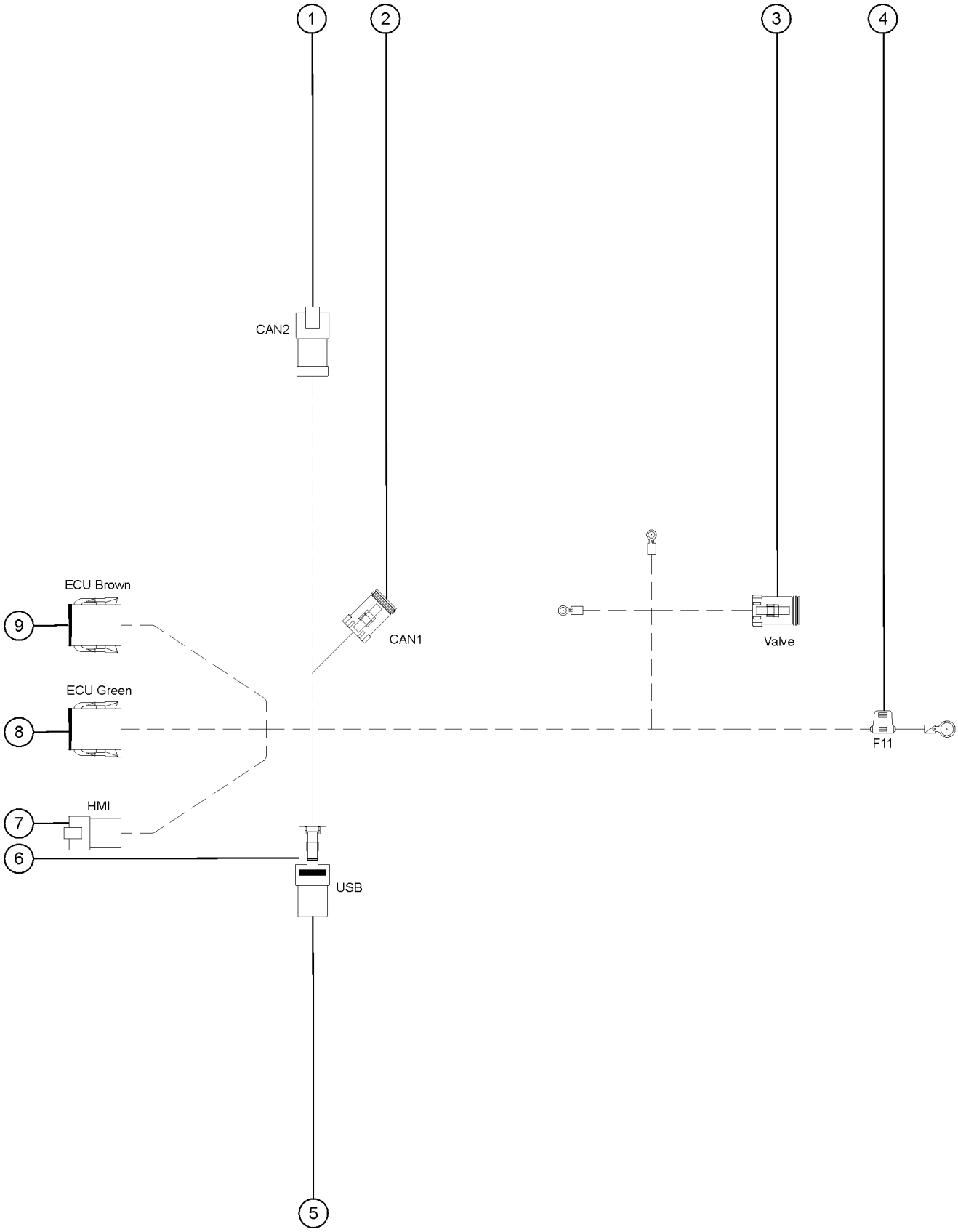

311.104 Harness, Control, Pass

Item	Part No.	Description	Qty.
-	1290849GT	HARNESS, CONTROL, PASS	1
1	119066GT	CONN, RECEP, 3 WAY, DEUTSCH, DT, ENDCAP	1
1-	60460GT	LOCK,RECEP 3 WAY,SAEJ1939	1
2	119057GT	CONN, PLUG, 3 WAY, DEUTSCH, DT, ENDCAP	1
2-	60459GT	LOCK,PLUG 3 WAY,SAE J1939	1
3	60428GT	CONN, PLUG 4WAY, 14-18GA	1
3-	60429GT	LOCK, PLUG 4WAY, 14-18GA	1
4	62822GT	FUSE, 15 AMP, ATC	1
4-	121657GT	FUSE HOLDER,ATC 1-20 AMPS	1
5	T112536GT	CONN, RECEP 3 WAY DTM, 16-24 GA	1
6	T110954GT	CONN,PLUG 3 WAY DTM, 16-24GA	1
6-	T110955GT	LOCK,PLUG 3 WAY DTM, 16-24GA	1
7	T112536GT	CONN, RECEP 3 WAY DTM, 16-24 GA	1
7-	T112537GT	LOCK,RECEP 3 WAY DTM,16-24GA	1
8	822250GT	CONN,PLUG 12C WAY DTM 18-20GA	1
8-	88332GT	LOCK,PLUG 12 WAY DTM 18-20GA	1
9	1258100GT	CONN,PLUG 12D WAY DTM 18-20GA	1
9-	88332GT	LOCK,PLUG 12 WAY DTM 18-20GA	1

311.105 Harness, Engine, Perkins404D

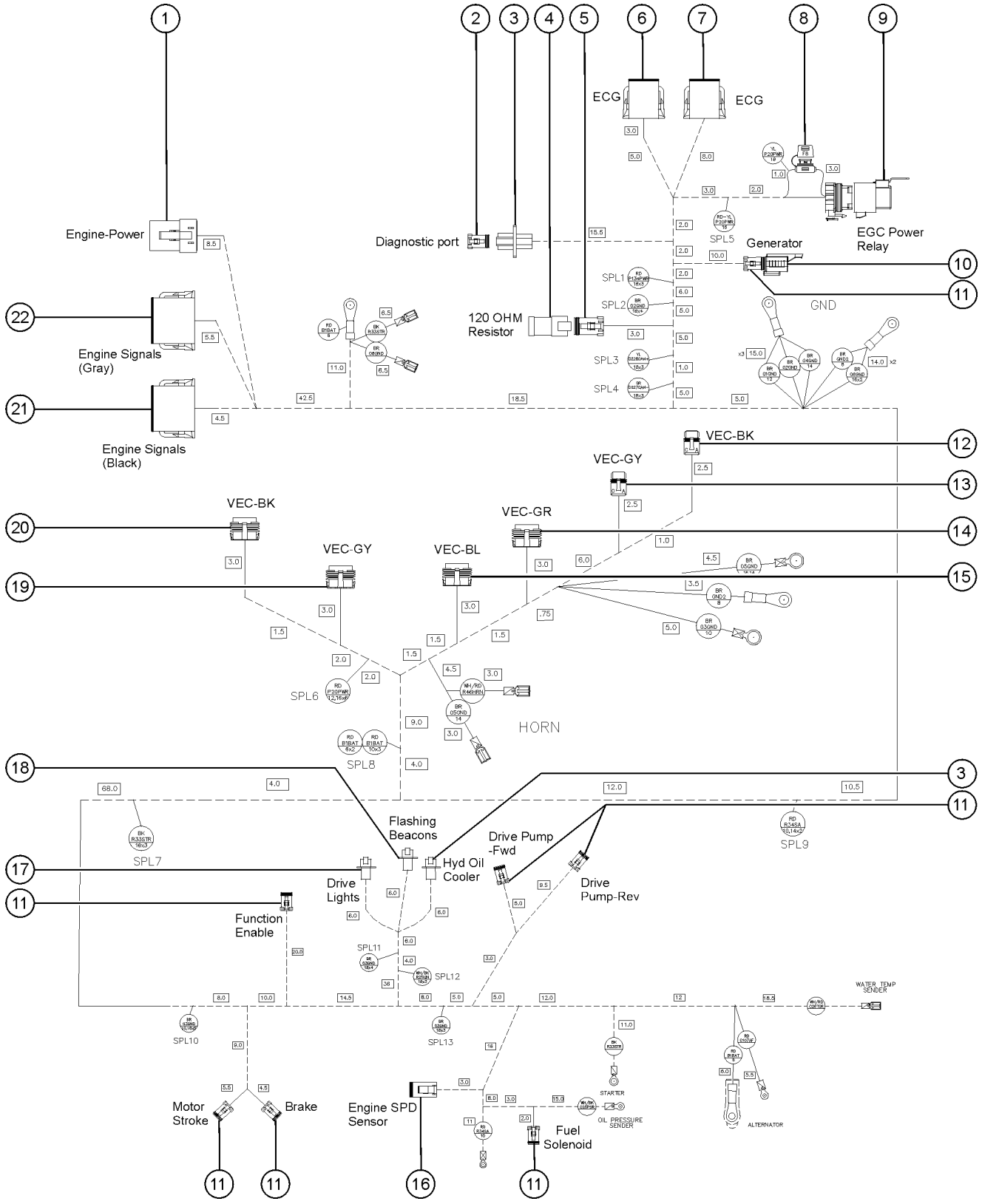

311.105 Harness, Engine, Perkins404D

Item	Part No.	Description	Qty.
-	1269698GT	HARNESS, ENGINE, PERKINS404D	1
1	60527GT	CONN, PLUG, 4 WAY, DEUTSCH, DTP	1
1-	60528GT	LOCK,PLUG 4 WAY,12-14GA***	1
2	119058GT	CONN, PLUG, 4 WAY, DEUTSCH, DT, ENDCAP	1
2-	60429GT	LOCK, PLUG 4WAY, 14-18GA	1
3	73723GT	CONN RECEPT,FLANGED	2
3-	60443GT	LOCK, RECEP 4WAY, 14-18GA	2
4	60452GT	CONN, RECEP, 3 WAY, DEUTSCH, DT, J1939/120OHM	1
5	119057GT	CONN, PLUG, 3 WAY, DEUTSCH, DT, ENDCAP	1
5-	60459GT	LOCK,PLUG 3 WAY,SAE J1939	1
6	88331GT	CONN, PLUG, 12 WAY, DEUTSCH, DTM, GRAY, KEY-A	1
6-	88332GT	LOCK,PLUG 12 WAY DTM 18-20GA	1
7	106780GT	CONN, PLUG, 12 WAY, DEUTSCH, DTM, BLACK, KEY-B	1
7-	88332GT	LOCK,PLUG 12 WAY DTM 18-20GA	1
8	67505GT	FUSE,10 AMP,ATC	1
8-	121657GT	FUSE HOLDER,ATC 1-20 AMPS	1
9	60521GT	RELAY,SEALED 30/40 AMP	1
9-	1281481GT	SOCKET,SEALED RELAY,4WAY WHITE	1
9-	1261818GT	LOCK, CPA AXIAL,GRN, DELPHI	1
10	229110GT	CONN, RECEP, 2 WAY, DEUTSCH, DT, CAP	1
11	119056GT	CONN, PLUG, 2 WAY, DEUTSCH, DT, ENDCAP	7
11-	60425GT	CONN, PLUG, 2 WAY, DEUTSCH, DT, LOCK	7
12	822467GT	CONN,2WAY CBT MALE,BLACK	1
12-	822469GT	LOCK,2WAY CBT TP2 SEALED	1
13	822468GT	CONN,2WAY CBT MALE,GRAY	1
13-	822469GT	LOCK,2WAY CBT TP2 SEALED	1
14	822463GT	CONN,8WAY CBT MALE,GREEN	1
14-	822466GT	LOCK,8WAY CBT TP2 SEALED	1

311.105 Harness, Engine, Perkins404D

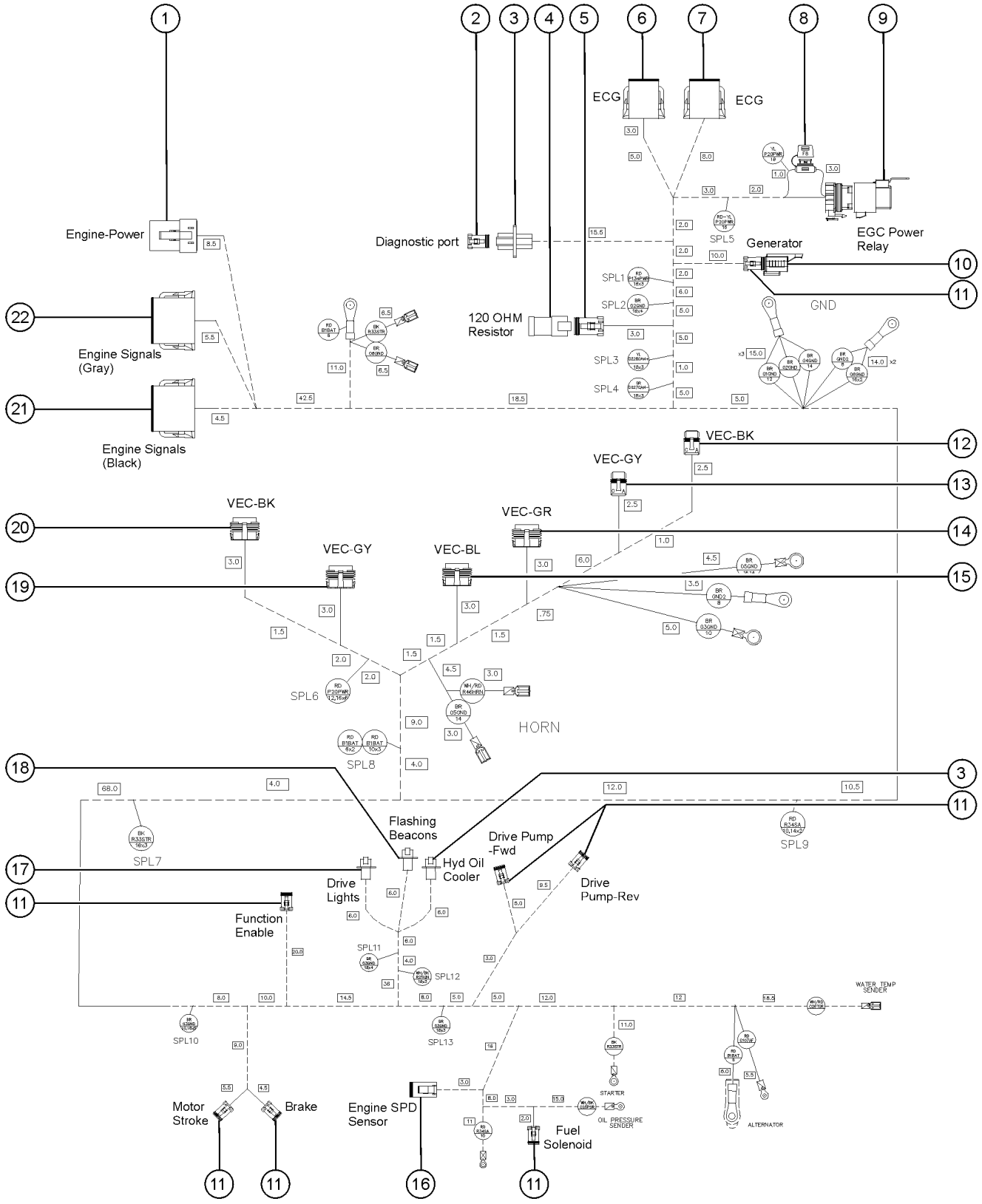

311.105 Harness, Engine, Perkins404D

Item	Part No.	Description	Qty.
15	822462GT	CONN, PLUG, 8 WAY, EATON, METRI-PACK 150, BLUE	1
15-	822466GT	LOCK,8WAY CBT TP2 SEALED	1
16	1259995GT	CONN, PLUG 2 WAY, DTM	1
16-	1259996GT	CONN, PLUG, 2 WAY, DEUTSCH, DTM, LOCK	1
17	1269704GT	CONNECTOR, RECEP, 2WAY, FL	1
17-	60439GT	CONN, RECEP, 2 WAY, DEUTSCH, DT, LOCK	1
18	75629GT	CONN,RECEP 3 WAY,W/FLANGE	1
18-	60441GT	CONN, RECEP, 3 WAY, DEUTSCH, DT, LOCK	1
19	822465GT	CONN,8WAY CBT MALE,GRAY	1
19-	822466GT	LOCK,8WAY CBT TP2 SEALED	1
20	822464GT	CONN,8WAY CBT MALE,BLACK	1
20-	822466GT	LOCK,8WAY CBT TP2 SEALED	1
21	119062GT	CONN, PLUG, 12 WAY, DEUTSCH, DT, BLACK	1
21-	60435GT	LOCK, PLUG 12WAY, 14-18GA, GRN	1
22	119061GT	CONN, PLUG, 12 WAY, DEUTSCH, DT, GRAY	1
22-	60435GT	LOCK, PLUG 12WAY, 14-18GA, GRN	1

311.105A Harness, Engine, Deutz2.9T

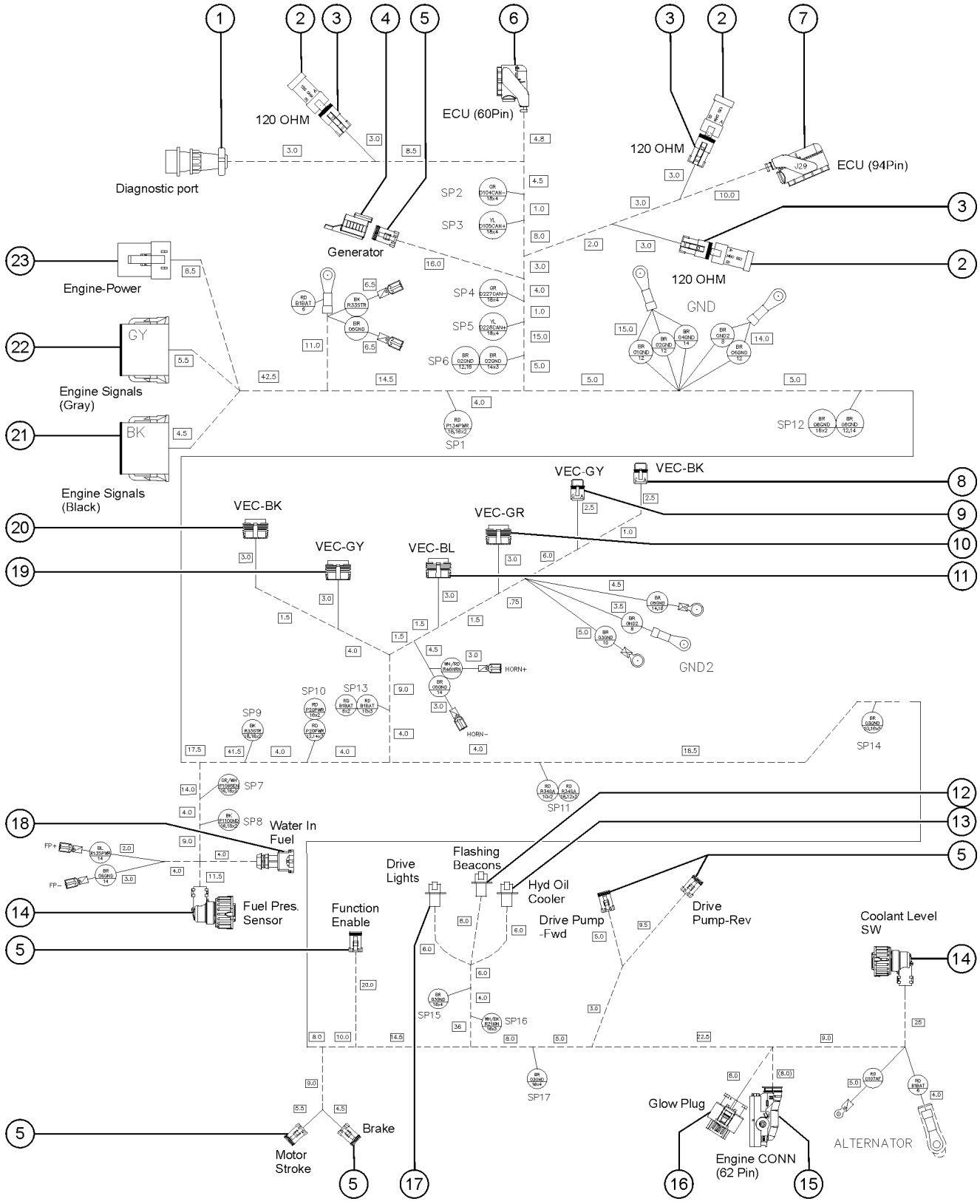

311.105A Harness, Engine, Deutz2.9T

Item	Part No.	Description	Qty.
-	1269699GT	HARNESS,ENGINE, DEUTZ2.9T	1
1	822448GT	CONN,REC,CANN TR 12WAY,SIZE14	1
1-	822450GT	CLAMP,CABLE,CANNON SIZE 14	1
2	60452GT	CONN, RECEP, 3 WAY, DEUTSCH, DT, J1939/120OHM	3
3	119057GT	CONN, PLUG, 3 WAY, DEUTSCH, DT, ENDCAP	3
3-	60459GT	LOCK,PLUG 3 WAY,SAE J1939	3
4	229110GT	CONN, RECEP, 2 WAY, DEUTSCH, DT, CAP	1
5	119056GT	CONN, PLUG, 2 WAY, DEUTSCH, DT, ENDCAP	6
5-	60425GT	CONN, PLUG, 2 WAY, DEUTSCH, DT, LOCK	6
6	822438GT	CONN KIT,RECEP 60POS,AMP MQS 1.5	1
7	822439GT	CONN KIT,94POS,AMP MQS1.5/MCP2.8	1
8	822467GT	CONN,2WAY CBT MALE,BLACK	1
8-	822469GT	LOCK,2WAY CBT TP2 SEALED	1
9	822468GT	CONN,2WAY CBT MALE,GRAY	1
9-	822469GT	LOCK,2WAY CBT TP2 SEALED	1
10	822463GT	CONN,8WAY CBT MALE,GREEN	1
10-	822466GT	LOCK,8WAY CBT TP2 SEALED	1
11	822462GT	CONN, PLUG, 8 WAY, EATON, METRI-PACK 150, BLUE	1
11-	822466GT	LOCK,8WAY CBT TP2 SEALED	1
12	75629GT	CONN,RECEP 3 WAY,W/FLANGE	1
12-	60441GT	CONN, RECEP, 3 WAY, DEUTSCH, DT, LOCK	1
13	73723GT	CONN RECEPT,FLANGED	1
13-	60443GT	LOCK, RECEP 4WAY, 14-18GA	1
14	822445GT	CONN,CIRC. AMP 4WAY,BLACK	2
14-	1262857GT	SHELL,90DEG,CONN CIRC,AMP,NW8.5	2
15	822436GT	CONN,RECEP 62POS,AMP MCP1.5K/2.8	1
15-	822437GT	COVER,AMP 39/62POS CONNECTORS	1
16	822442GT	CONN,REC 2 WAY,AMP 8MM NGI, BLACK	1

311.105A Harness, Engine, Deutz2.9T

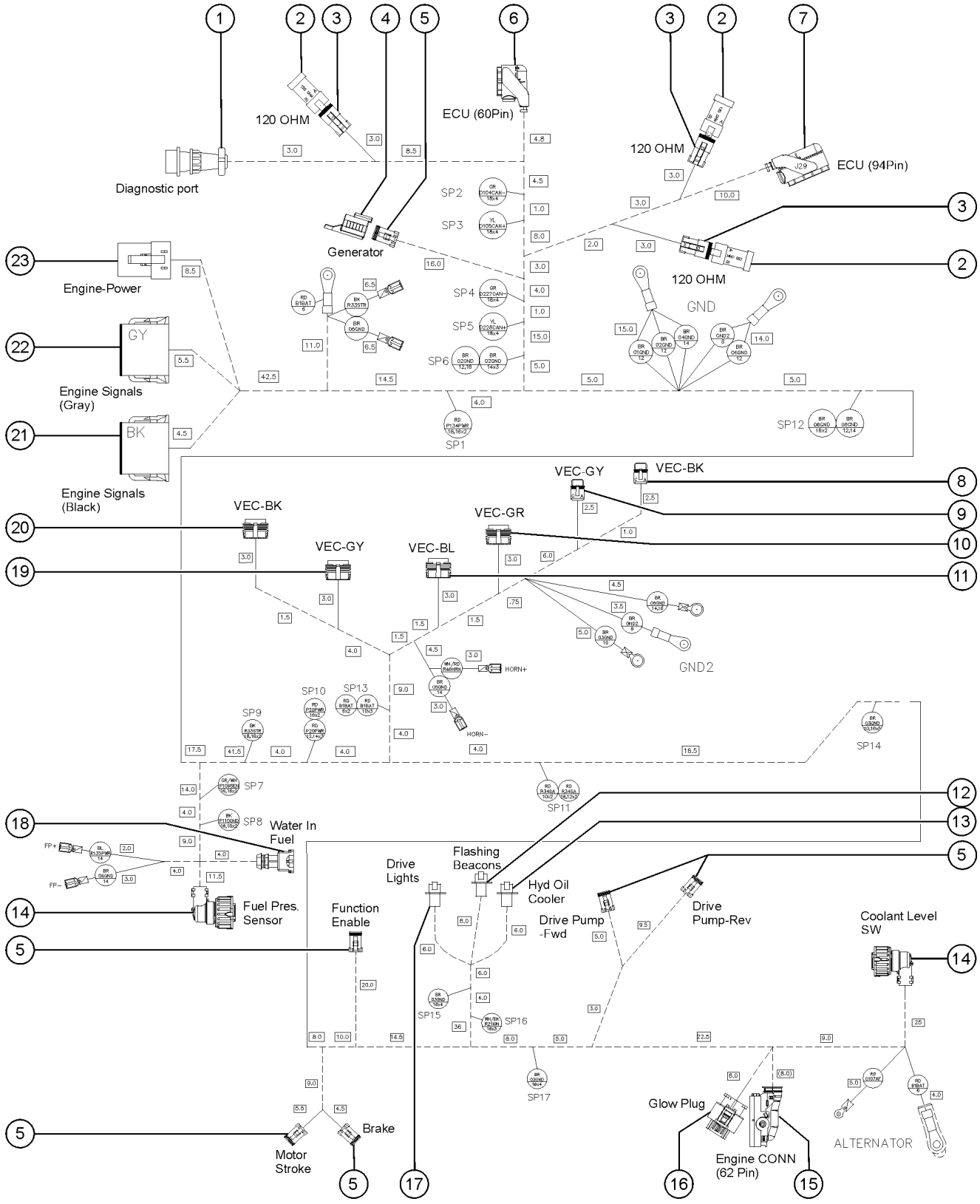

311.105A Harness, Engine, Deutz2.9T

Item	Part No.	Description	Qty.
17	1269704GT	CONNECTOR, RECEP, 2WAY, FL	1
17-	60439GT	CONN, RECEP, 2 WAY, DEUTSCH, DT, LOCK	1
18	822440GT	CONN,RECEP 2 WAY,AMP JR PT	1
19	822465GT	CONN,8WAY CBT MALE,GRAY	1
19-	822466GT	LOCK,8WAY CBT TP2 SEALED	1
20	822464GT	CONN,8WAY CBT MALE,BLACK	1
20-	822466GT	LOCK,8WAY CBT TP2 SEALED	1
21	119062GT	CONN, PLUG, 12 WAY, DEUTSCH, DT, BLACK	1
21-	60435GT	LOCK, PLUG 12WAY, 14-18GA, GRN	1
22	119061GT	CONN, PLUG, 12 WAY, DEUTSCH, DT, GRAY	1
22-	60435GT	LOCK, PLUG 12WAY, 14-18GA, GRN	1
23	60527GT	CONN, PLUG, 4 WAY, DEUTSCH, DTP	1
23-	60528GT	LOCK,PLUG 4 WAY,12-14GA***	1

311.105B Harness, Engine, Deutz 2011

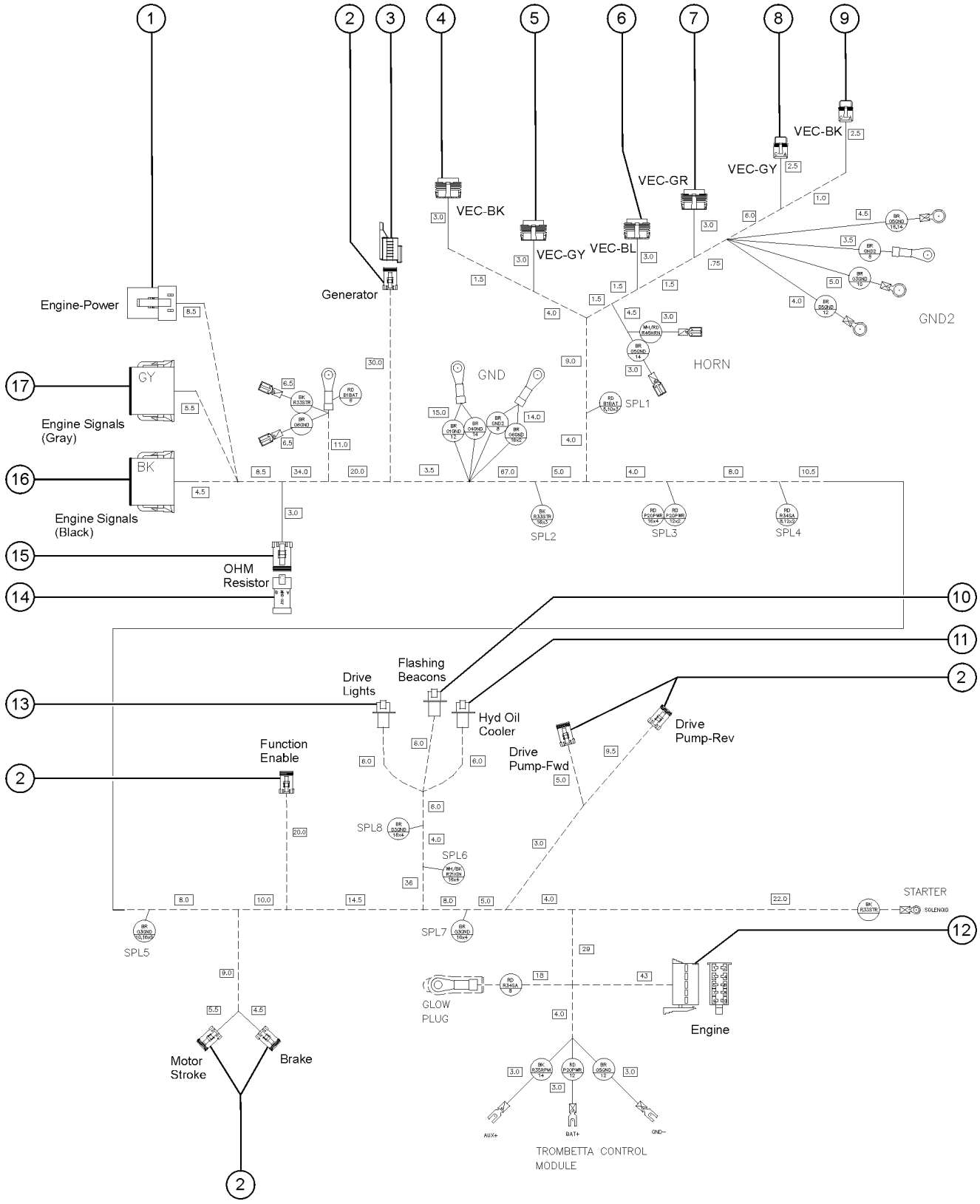

311.105B Harness, Engine, Deutz 2011

Item	Part No.	Description	Qty.
-	1269700GT	HARNESS,ENGINE, DEUTZ2011	1
1	60527GT	CONN, PLUG, 4 WAY, DEUTSCH, DTP	1
1-	60528GT	LOCK,PLUG 4 WAY,12-14GA***	1
2	119056GT	CONN, PLUG, 2 WAY, DEUTSCH, DT, ENDCAP	6
2-	60425GT	CONN, PLUG, 2 WAY, DEUTSCH, DT, LOCK	6
3	229110GT	CONN, RECEP, 2 WAY, DEUTSCH, DT, CAP	1
4	822464GT	CONN,8WAY CBT MALE,BLACK	1
4-	822466GT	LOCK,8WAY CBT TP2 SEALED	1
5	822465GT	CONN,8WAY CBT MALE,GRAY	1
5-	822466GT	LOCK,8WAY CBT TP2 SEALED	1
6	822462GT	CONN, PLUG, 8 WAY, EATON, METRI-PACK 150, BLUE	1
6-	822466GT	LOCK,8WAY CBT TP2 SEALED	1
7	822463GT	CONN,8WAY CBT MALE,GREEN	1
7-	822466GT	LOCK,8WAY CBT TP2 SEALED	1
8	822468GT	CONN,2WAY CBT MALE,GRAY	1
8-	822469GT	LOCK,2WAY CBT TP2 SEALED	1
9	822467GT	CONN,2WAY CBT MALE,BLACK	1
9-	822469GT	LOCK,2WAY CBT TP2 SEALED	1
10	75629GT	CONN,RECEP 3 WAY,W/FLANGE	1
10-	60441GT	CONN, RECEP, 3 WAY, DEUTSCH, DT, LOCK	1
11	73723GT	CONN RECEPT,FLANGED	1
11-	60443GT	LOCK, RECEP 4WAY, 14-18GA	1
12	1280592GT	CONNECTOR, 10 WAY, AMP	1
13	1269704GT	CONNECTOR, RECEP, 2WAY, FL	1
13-	60439GT	CONN, RECEP, 2 WAY, DEUTSCH, DT, LOCK	1
14	60452GT	CONN, RECEP, 3 WAY, DEUTSCH, DT, J1939/120OHM	1
15	119057GT	CONN, PLUG, 3 WAY, DEUTSCH, DT, ENDCAP	1
15-	60459GT	LOCK,PLUG 3 WAY,SAE J1939	1

311.105B Harness, Engine, Deutz 2011

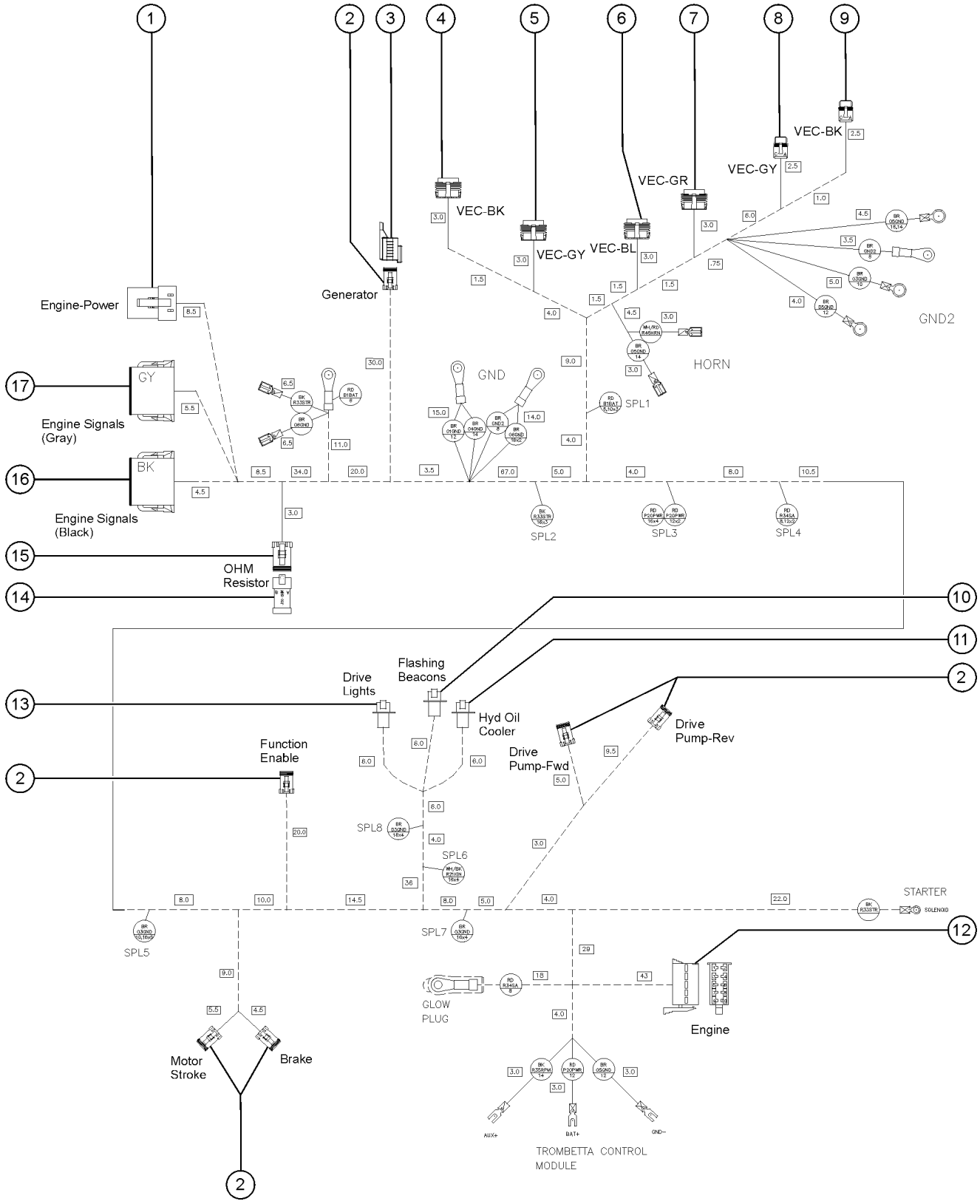

311.105B Harness, Engine, Deutz 2011

Item	*Part No.*	*Description*	*Qty.*
16	119062GT	CONN, PLUG, 12 WAY, DEUTSCH, DT, BLACK	1
16-	60435GT	LOCK, PLUG 12WAY, 14-18GA, GRN	1
17	119061GT	CONN, PLUG, 12 WAY, DEUTSCH, DT, GRAY	1
17-	60435GT	LOCK, PLUG 12WAY, 14-18GA, GRN	1

311.105C Harness, Engine, GM3.0

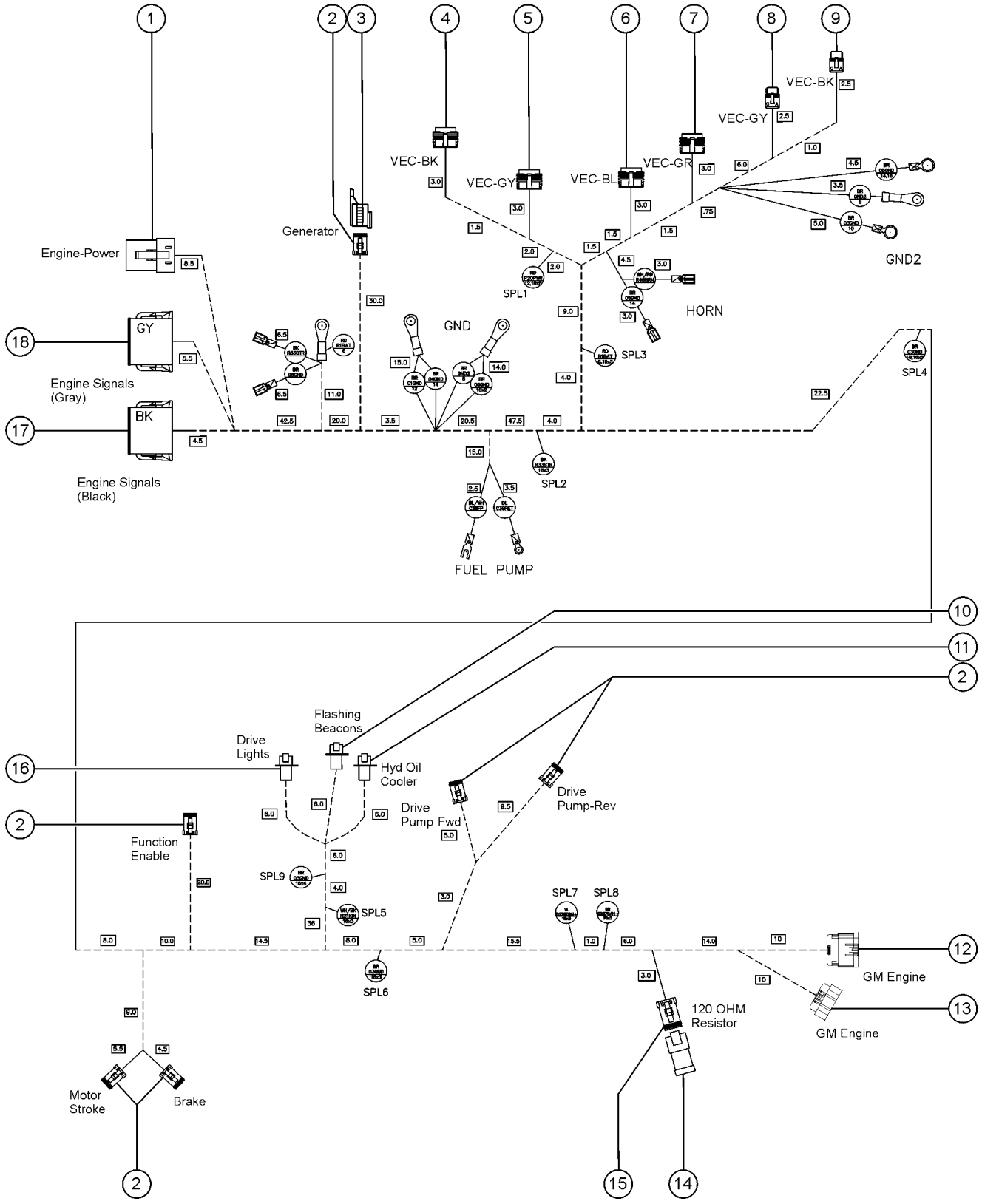

311.105C Harness, Engine, GM3.0

Item	Part No.	Description	Qty.
-	1269701GT	HARNESS, ENGINE, GM3.0	1
1	60527GT	CONN, PLUG, 4 WAY, DEUTSCH, DTP	1
1-	60528GT	LOCK,PLUG 4 WAY,12-14GA***	1
2	119056GT	CONN, PLUG, 2 WAY, DEUTSCH, DT, ENDCAP	6
2-	60425GT	CONN, PLUG, 2 WAY, DEUTSCH, DT, LOCK	6
3	229110GT	CONN, RECEP, 2 WAY, DEUTSCH, DT, CAP	1
4	822464GT	CONN,8WAY CBT MALE,BLACK	1
4-	822466GT	LOCK,8WAY CBT TP2 SEALED	1
5	822465GT	CONN,8WAY CBT MALE,GRAY	1
5-	822466GT	LOCK,8WAY CBT TP2 SEALED	1
6	822462GT	CONN, PLUG, 8 WAY, EATON, METRI-PACK 150, BLUE	1
6-	822466GT	LOCK,8WAY CBT TP2 SEALED	1
7	822463GT	CONN,8WAY CBT MALE,GREEN	1
7-	822466GT	LOCK,8WAY CBT TP2 SEALED	1
8	822468GT	CONN,2WAY CBT MALE,GRAY	1
8-	822469GT	LOCK,2WAY CBT TP2 SEALED	1
9	822467GT	CONN,2WAY CBT MALE,BLACK	1
9-	822469GT	LOCK,2WAY CBT TP2 SEALED	1
10	75629GT	CONN,RECEP 3 WAY,W/FLANGE	1
10-	60441GT	CONN, RECEP, 3 WAY, DEUTSCH, DT, LOCK	1
11	73723GT	CONN RECEPT,FLANGED	1
11-	60443GT	LOCK, RECEP 4WAY, 14-18GA	1
12	1270122GT	CONN, RECEP, DELPHI 16 WAY, 150 SERIES	1
12-	1270123GT	LOCK, RECEP, DELPHI 16 WAY, 150 SERIES	1
13	1270121GT	CONN, PLUG, DELPHI 16 WAY, 150 SERIES	1
13-	1270123GT	LOCK, RECEP, DELPHI 16 WAY, 150 SERIES	1
14	60452GT	CONN, RECEP, 3 WAY, DEUTSCH, DT, J1939/120OHM	1
15	119057GT	CONN, PLUG, 3 WAY, DEUTSCH, DT, ENDCAP	1

311.105C Harness, Engine, GM3.0

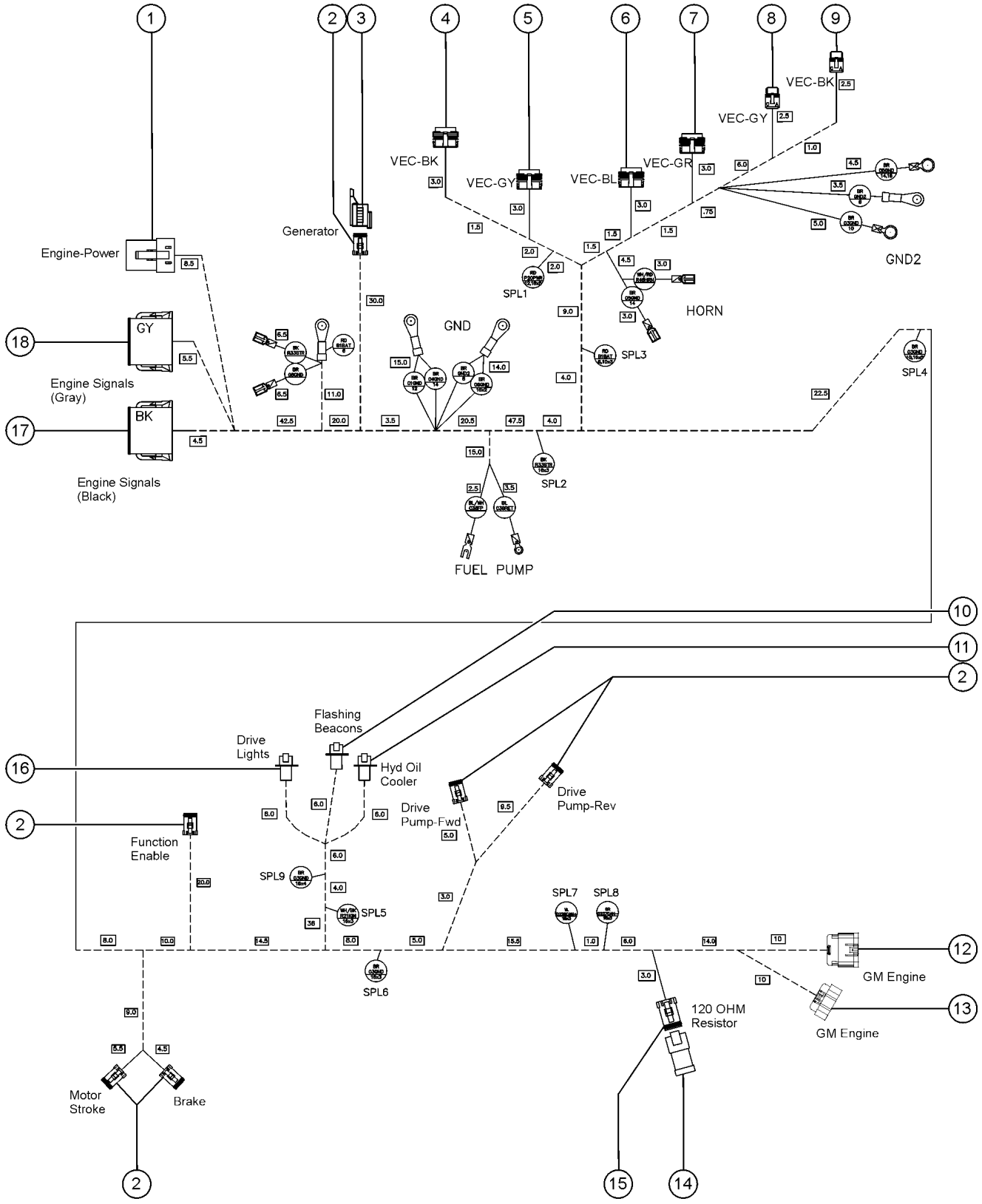

311.105C Harness, Engine, GM3.0

Item	Part No.	Description	Qty.
15-	60459GT	LOCK,PLUG 3 WAY,SAE J1939	1
16	1269704GT	CONNECTOR, RECEP, 2WAY, FL	1
16-	60439GT	CONN, RECEP, 2 WAY, DEUTSCH, DT, LOCK	1
17	119062GT	CONN, PLUG, 12 WAY, DEUTSCH, DT, BLACK	1
17-	60435GT	LOCK, PLUG 12WAY, 14-18GA, GRN	1
18	119061GT	CONN, PLUG, 12 WAY, DEUTSCH, DT, GRAY	1
18-	60435GT	LOCK, PLUG 12WAY, 14-18GA, GRN	1

311.105D Harness, Deutz 2.2 Tier IV, S80/85 XC

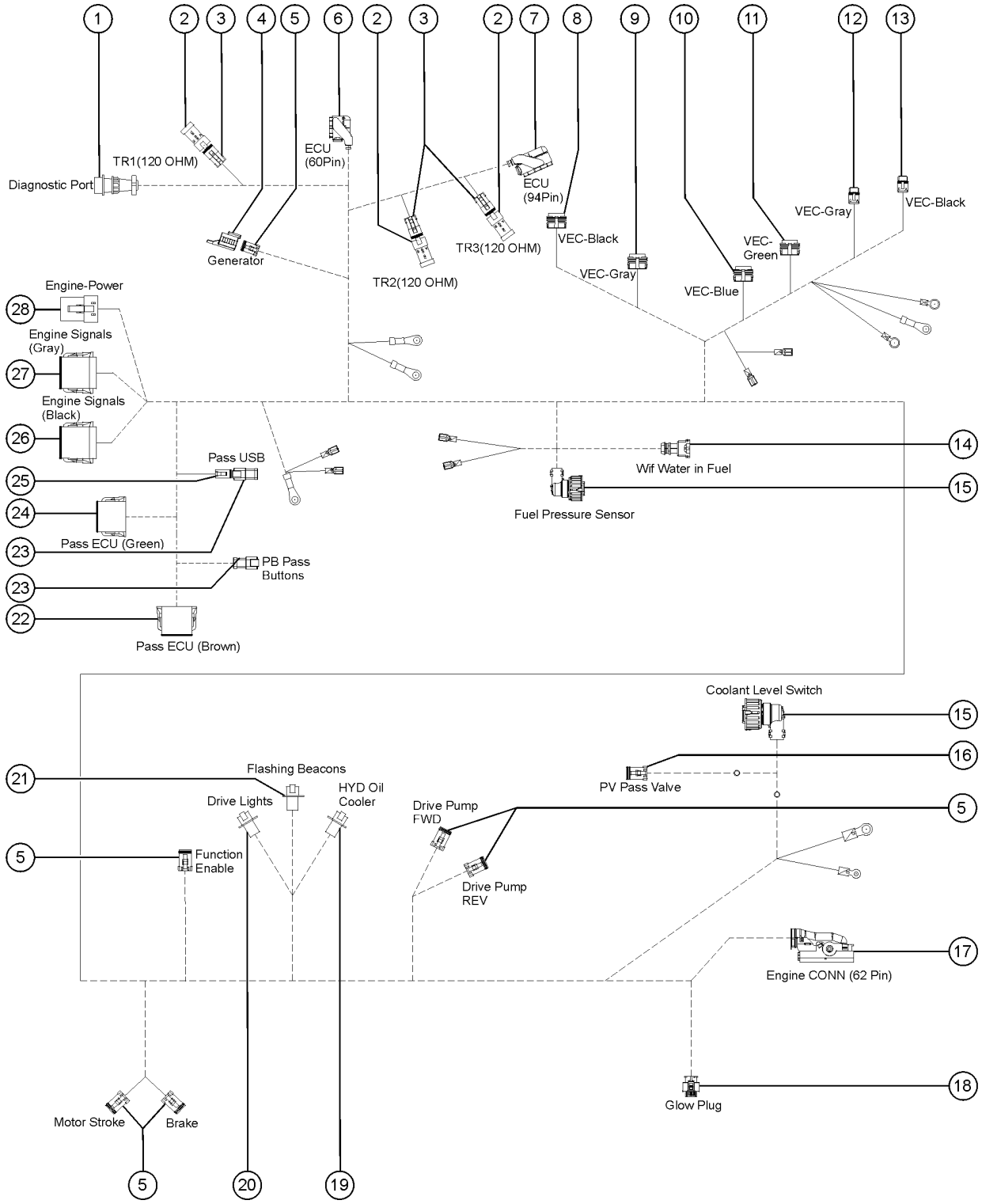

311.105D Harness, Deutz 2.2 Tier IV, S80/85 XC

Item	Part No.	Description	Qty.
-		HARNESS, DEUTZ 2.2 TIER IV, S80/85 XC no longer available	1
1	822448GT	CONN,REC,CANN TR 12WAY,SIZE14	1
1-	822449GT	DUST CAP,CANNON TR,SIZE 14	1
2	60452GT	CONN, RECEP, 3 WAY, DEUTSCH, DT, J1939/120OHM	3
3	119057GT	CONN, PLUG, 3 WAY, DEUTSCH, DT, ENDCAP	3
3-	60459GT	LOCK,PLUG 3 WAY,SAE J1939	3
4	229110GT	CONN, RECEP, 2 WAY, DEUTSCH, DT, CAP	1
5	119056GT	CONN, PLUG, 2 WAY, DEUTSCH, DT, ENDCAP	6
5-	60425GT	CONN, PLUG, 2 WAY, DEUTSCH, DT, LOCK	6
6	822438GT	CONN KIT,RECEP 60POS,AMP MQS 1.5	1
7	822439GT	CONN KIT,94POS,AMP MQS1.5/MCP2.8	1
8	822464GT	CONN,8WAY CBT MALE,BLACK	1
8-	822466GT	LOCK,8WAY CBT TP2 SEALED	1
9	822465GT	CONN,8WAY CBT MALE,GRAY	1
9-	822466GT	LOCK,8WAY CBT TP2 SEALED	1
10	822462GT	CONN, PLUG, 8 WAY, EATON, METRI-PACK 150, BLUE	1
10-	822466GT	LOCK,8WAY CBT TP2 SEALED	1
11	822463GT	CONN,8WAY CBT MALE,GREEN	1
11-	822466GT	LOCK,8WAY CBT TP2 SEALED	1
12	822468GT	CONN,2WAY CBT MALE,GRAY	1
12-	822469GT	LOCK,2WAY CBT TP2 SEALED	1
13	822467GT	CONN,2WAY CBT MALE,BLACK	1
13-	822469GT	LOCK,2WAY CBT TP2 SEALED	1
14	822440GT	CONN,RECEP 2 WAY,AMP JR PT	1
15	822445GT	CONN,CIRC. AMP 4WAY,BLACK	2
16	60428GT	CONN, PLUG 4WAY, 14-18GA	1
16-	60429GT	LOCK, PLUG 4WAY, 14-18GA	1
17	822436GT	CONN,RECEP 62POS,AMP MCP1.5K/2.8	1

311.105D Harness, Deutz 2.2 Tier IV, S80/85 XC

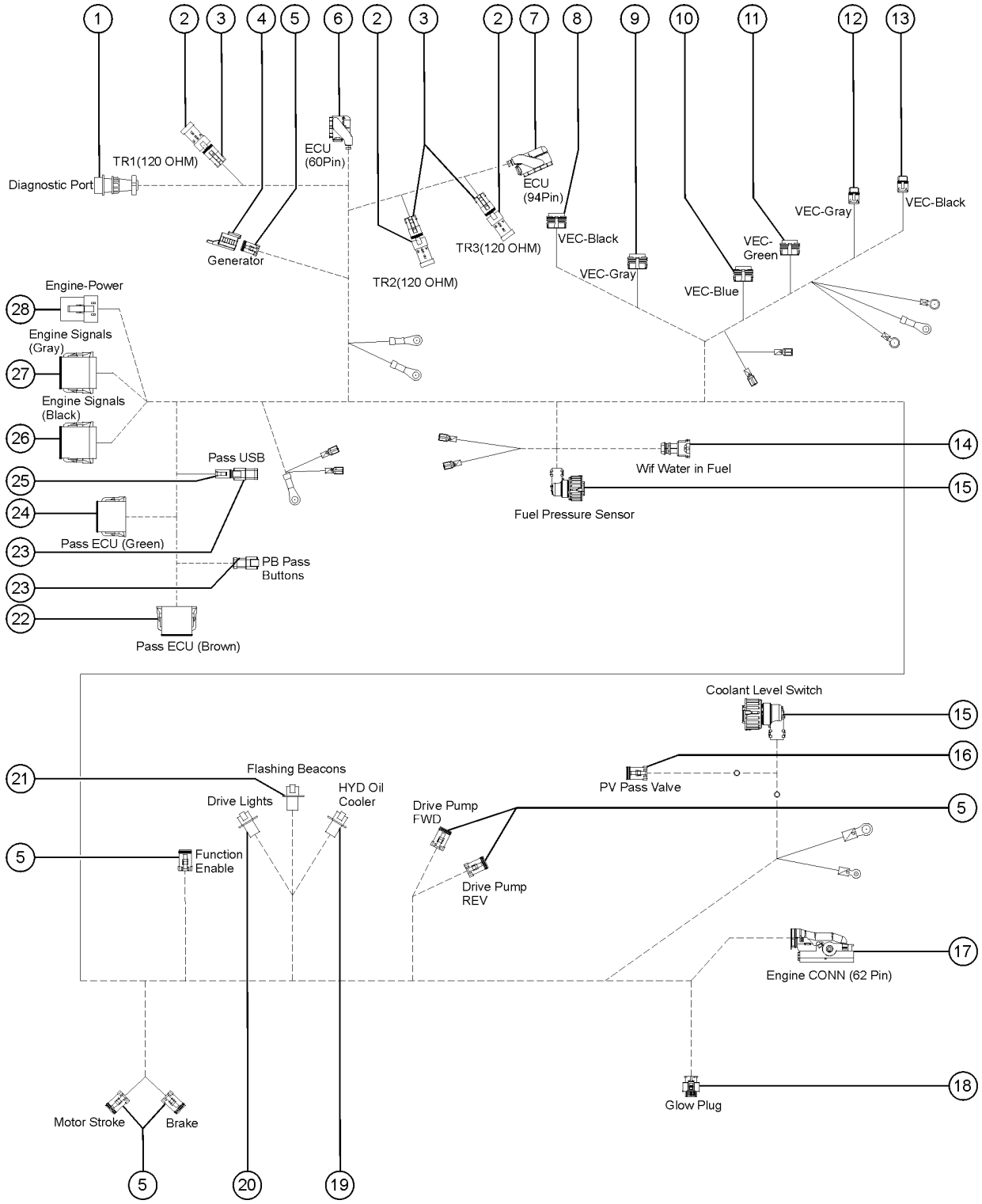

311.105D Harness, Deutz 2.2 Tier IV, S80/85 XC

Item	Part No.	Description	Qty.
17-	822437GT	COVER,AMP 39/62POS CONNECTORS	1
18	1290925GT	CONN,REC 1 WAY,AMP 8MM NGI, BLACK	1
19	73723GT	CONN RECEPT,FLANGED	1
19-	60443GT	LOCK, RECEP 4WAY, 14-18GA	1
20	1269704GT	CONNECTOR, RECEP, 2WAY, FL	1
20-	60439GT	CONN, RECEP, 2 WAY, DEUTSCH, DT, LOCK	1
21	75629GT	CONN,RECEP 3 WAY,W/FLANGE	1
21-	60441GT	CONN, RECEP, 3 WAY, DEUTSCH, DT, LOCK	1
22	1258100GT	CONN,PLUG 12D WAY DTM 18-20GA	1
22-	88332GT	LOCK,PLUG 12 WAY DTM 18-20GA	1
23	T112536GT	CONN, RECEP 3 WAY DTM, 16-24 GA	1
23-	T112537GT	LOCK,RECEP 3 WAY DTM,16-24GA	1
24	822250GT	CONN,PLUG 12C WAY DTM 18-20GA	1
24-	88332GT	LOCK,PLUG 12 WAY DTM 18-20GA	1
25	T110954GT	CONN,PLUG 3 WAY DTM, 16-24GA	1
25-	T110955GT	LOCK,PLUG 3 WAY DTM, 16-24GA	1
26	119062GT	CONN, PLUG, 12 WAY, DEUTSCH, DT, BLACK	1
26-	60435GT	LOCK, PLUG 12WAY, 14-18GA, GRN	1
27	119061GT	CONN, PLUG, 12 WAY, DEUTSCH, DT, GRAY	1
27-	60435GT	LOCK, PLUG 12WAY, 14-18GA, GRN	1
28	60527GT	CONN, PLUG, 4 WAY, DEUTSCH, DTP	1
28-	60528GT	LOCK,PLUG 4 WAY,12-14GA***	1

311.105E Harness, Deutz 2.2 Stage V, S80/85 XC

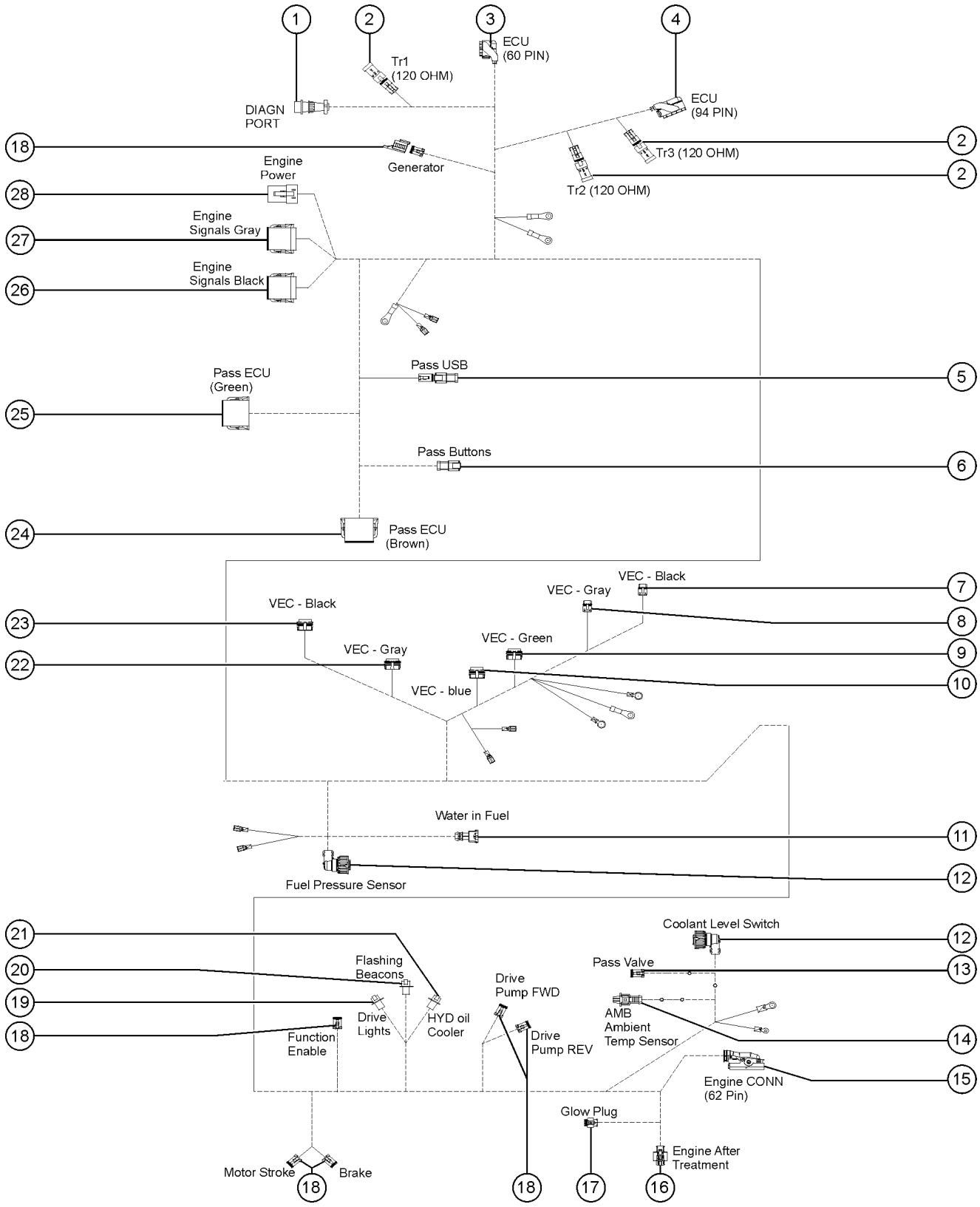

311.105E Harness, Deutz 2.2 Stage V, S80/85 XC

Item	Part No.	Description	Qty.
-	1290930GT	HARNESS, DEUTZ 2.2 STAGE V, S80/85 XC	1
1	822448GT	CONN,REC,CANN TR 12WAY,SIZE14	1
1-	822449GT	DUST CAP,CANNON TR,SIZE 14	1
1-	822450GT	CLAMP,CABLE,CANNON SIZE 14	1
2	119057GT	CONN, PLUG, 3 WAY, DEUTSCH, DT, ENDCAP	3
2-	60459GT	LOCK,PLUG 3 WAY,SAE J1939	3
2-	60452GT	CONN, RECEP, 3 WAY, DEUTSCH, DT, J1939/120OHM	3
3	822438GT	CONN KIT,RECEP 60POS,AMP MQS 1.5	1
4	822439GT	CONN KIT,94POS,AMP MQS1.5/MCP2.8	1
5	T110954GT	CONN,PLUG 3 WAY DTM, 16-24GA	1
5-	T110955GT	LOCK,PLUG 3 WAY DTM, 16-24GA	1
5-	T112536GT	CONN, RECEP 3 WAY DTM, 16-24 GA	1
6	T112536GT	CONN, RECEP 3 WAY DTM, 16-24 GA	1
6-	T112537GT	LOCK,RECEP 3 WAY DTM,16-24GA	1
7	822467GT	CONN,2WAY CBT MALE,BLACK	1
7-	822469GT	LOCK,2WAY CBT TP2 SEALED	1
8	822468GT	CONN,2WAY CBT MALE,GRAY	1
8-	822469GT	LOCK,2WAY CBT TP2 SEALED	1
9	822463GT	CONN,8WAY CBT MALE,GREEN	1
9-	822459GT	SEAL,CONN,DELPHI,BLUE	1
10	822462GT	CONN, PLUG, 8 WAY, EATON, METRI-PACK 150, BLUE	1
10-	822466GT	LOCK,8WAY CBT TP2 SEALED	1
11	822440GT	CONN,RECEP 2 WAY,AMP JR PT	1
12	822445GT	CONN,CIRC. AMP 4WAY,BLACK	2
12-	1262857GT	SHELL,90DEG,CONN CIRC,AMP,NW8.5	2
13	60428GT	CONN, PLUG 4WAY, 14-18GA	1
13-	60429GT	LOCK, PLUG 4WAY, 14-18GA	1
14	1290926GT	CONN,RECEP 8 WAY,AMP	1

311.105E Harness, Deutz 2.2 Stage V, S80/85 XC

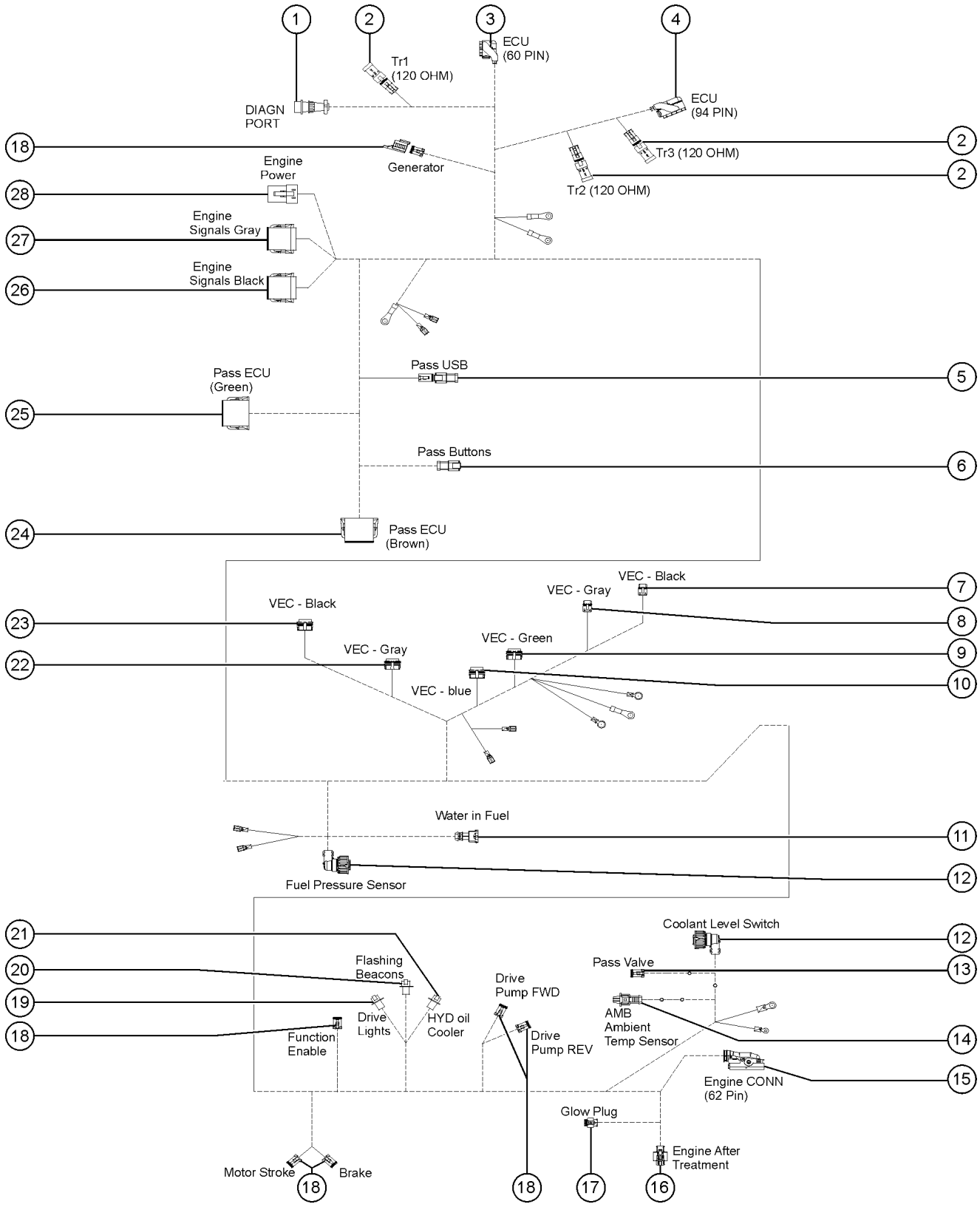

311.105E Harness, Deutz 2.2 Stage V, S80/85 XC

Item	Part No.	Description	Qty.
15	822436GT	CONN,RECEP 62POS,AMP MCP1.5K/2.8	1
15-	822437GT	COVER,AMP 39/62POS CONNECTORS	1
16	1290926GT	CONN,RECEP 8 WAY,AMP	1
17	1290925GT	CONN,REC 1 WAY,AMP 8MM NGI, BLACK	1
18	119056GT	CONN, PLUG, 2 WAY, DEUTSCH, DT, ENDCAP	7
18-	60425GT	CONN, PLUG, 2 WAY, DEUTSCH, DT, LOCK	7
19	1269704GT	CONNECTOR, RECEP, 2WAY, FL	1
19-	60439GT	CONN, RECEP, 2 WAY, DEUTSCH, DT, LOCK	1
20	75629GT	CONN,RECEP 3 WAY,W/FLANGE	1
20-	60441GT	CONN, RECEP, 3 WAY, DEUTSCH, DT, LOCK	1
21	73723GT	CONN RECEPT,FLANGED	1
21-	60443GT	LOCK, RECEP 4WAY, 14-18GA	1
22	822465GT	CONN,8WAY CBT MALE,GRAY	1
22-	822466GT	LOCK,8WAY CBT TP2 SEALED	1
23	822464GT	CONN,8WAY CBT MALE,BLACK	1
23-	822466GT	LOCK,8WAY CBT TP2 SEALED	1
24	1258100GT	CONN,PLUG 12D WAY DTM 18-20GA	1
24-	88332GT	LOCK,PLUG 12 WAY DTM 18-20GA	1
25	822250GT	CONN,PLUG 12C WAY DTM 18-20GA	1
25-	88332GT	LOCK,PLUG 12 WAY DTM 18-20GA	1
26	119062GT	CONN, PLUG, 12 WAY, DEUTSCH, DT, BLACK	1
26-	60435GT	LOCK, PLUG 12WAY, 14-18GA, GRN	1
27	119061GT	CONN, PLUG, 12 WAY, DEUTSCH, DT, GRAY	1
27-	60435GT	LOCK, PLUG 12WAY, 14-18GA, GRN	1
28	60527GT	CONN, PLUG, 4 WAY, DEUTSCH, DTP	1
28-	60528GT	LOCK,PLUG 4 WAY,12-14GA***	1

311.106 Harness, Platform, Manifold, ALC600, EPL

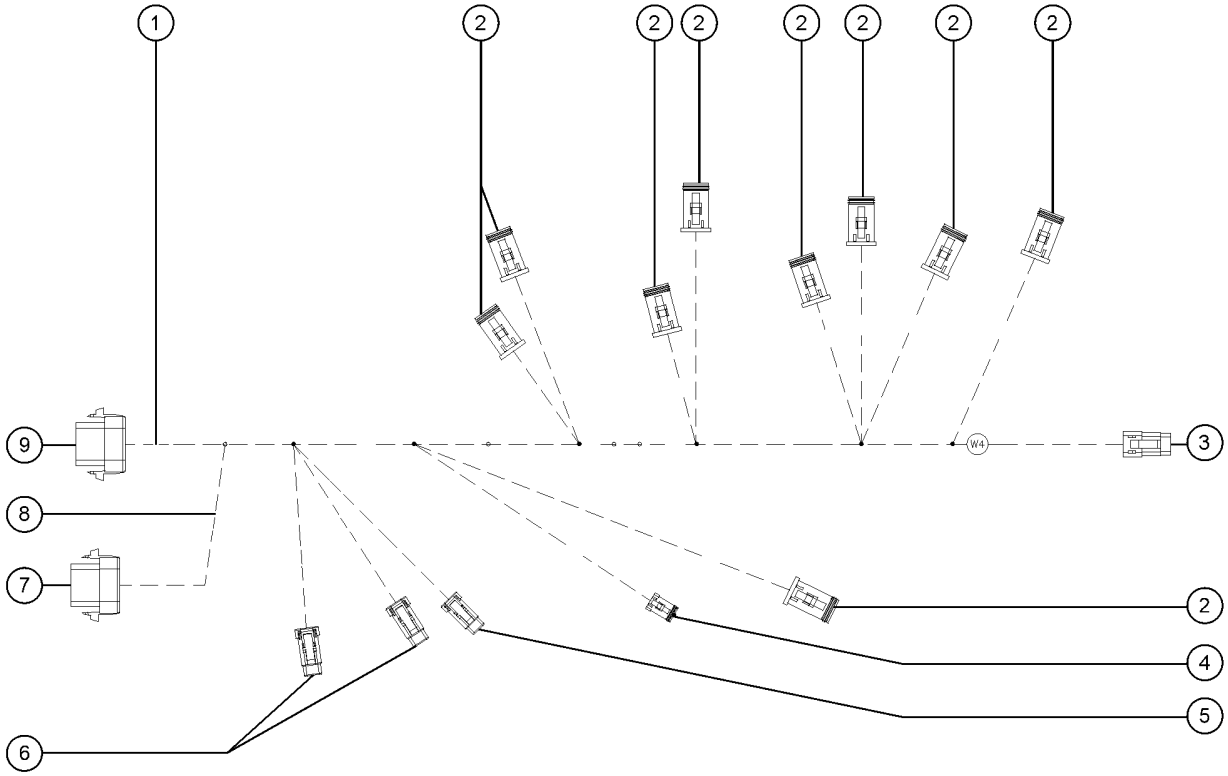

311.106 Harness, Platform, Manifold, ALC600, EPL

Item	Part No.	Description	Qty.
-	1306608GT	HARNESS, PLATFORM, MANIFOLD, ALC600, EPL	1
1	75640GT	WIRE LOOM,3/4 DIA.	23
2	119056GT	CONN, PLUG, 2 WAY, DEUTSCH, DT, ENDCAP	9
2-	60425GT	CONN, PLUG, 2 WAY, DEUTSCH, DT, LOCK	9
3	99343GT	CONNECTOR,PLUG 6 WAY 18-20 GA	1
3-	99344GT	LOCK,PLUG 6 WAY 18-20GA	1
4	119058GT	CONN, PLUG, 4 WAY, DEUTSCH, DT, ENDCAP	1
4-	60429GT	LOCK, PLUG 4WAY, 14-18GA	1
5	1277904GT	CONN, PLUG, 4 WAY, DEUTSCH, DTM	1
5-	1277905GT	CONN, PLUG, 4 WAY, DEUTSCH, DTM, LOCK	1
6	1263250GT	ASSEMBLY, TANK, FUEL, DIESEL, Z60E	2
6-	1268161GT	CONN, PLUG, 2 WAY, DEUTSCH, DTM, LOCK	2
7	226947GT	CONN, PLUG, 18 WAY, DEUTSCH, DTV, BLACK	1
7-	226390GT	LOCK,PLUG, 18WAY, DSCH, WV-18S	1
8	20973GT	WIRE LOOM,3/8 POLY SLIT	93 Inches
9	226389GT	CONN, PLUG, 18 WAY, DEUTSCH, DTV, GRAY	1
9-	226390GT	LOCK,PLUG, 18WAY, DSCH, WV-18S	1

311.106A Harness, Ext Cable, Can Sensor, 18/4c

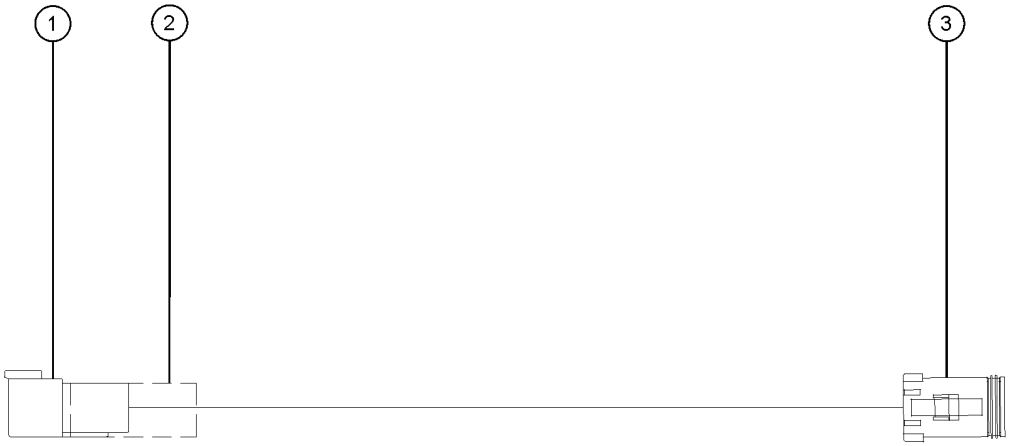

311.106A Harness, Ext Cable, Can Sensor, 18/4c

Item	*Part No.*	*Description*	*Qty.*
-	1306211GT	HARNESS, EXT CABLE, CAN SENSOR, 18/4C	1
1	119067GT	CONN, RECEP, 4 WAY, DEUTSCH, DT, ENDCAP	1
1-	60443GT	LOCK, RECEP 4WAY, 14-18GA	1
2	73725GT	BOOT,DTSCH,DTP4-BT	1
3	119058GT	CONN, PLUG, 4 WAY, DEUTSCH, DT, ENDCAP	1
3-	60429GT	LOCK, PLUG 4WAY, 14-18GA	1

311.107 Harness, LSB1RS, S80/85

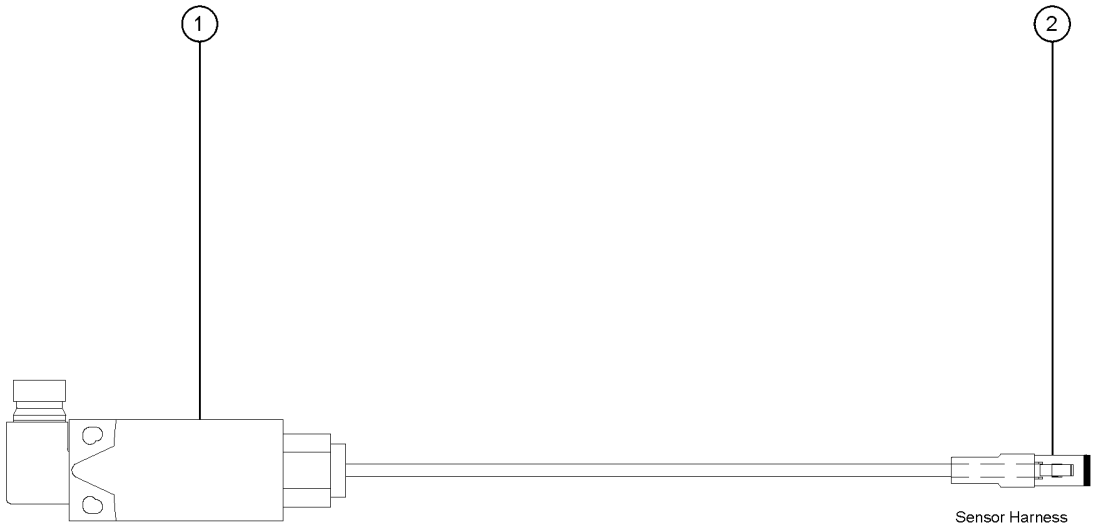

311.107 Harness, LSB1RS, S80/85

Item	*Part No.*	*Description*	*Qty.*
-	1269714GT	HARNESS, LSB1RS, S80/85	1
1	88356-32163GT	SWITCH,LIMIT,TABULATED,BLUE	1
2	119761GT	CONN PLUG 2 WAY EXTEND DT	1
2-	60425GT	CONN, PLUG, 2 WAY, DEUTSCH, DT, LOCK	

311.108 Harness, LST1O S80/85

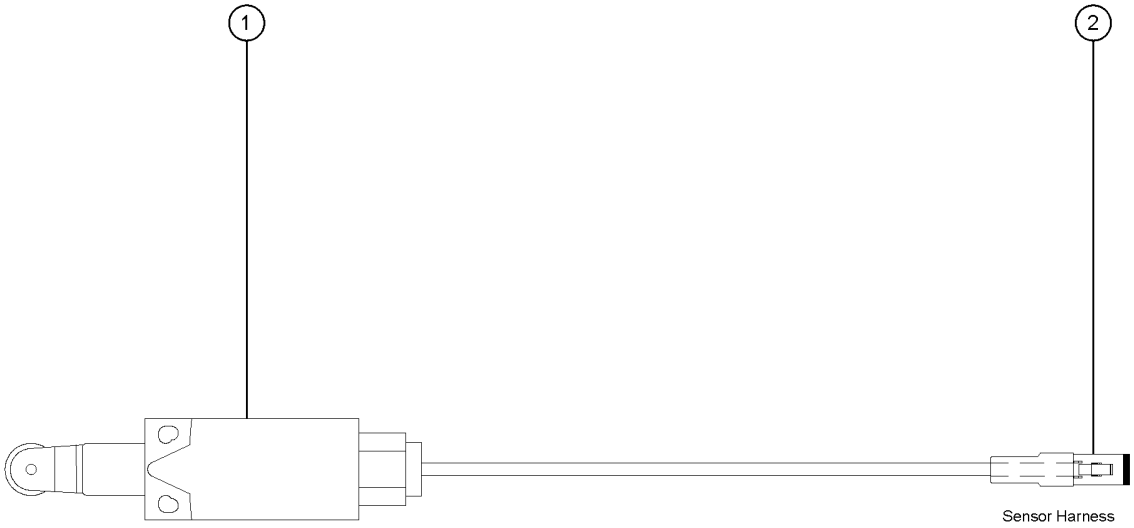

311.108 Harness, LST1O S80/85

Item	*Part No.*	*Description*	*Qty.*
-	1269715GT	HARNESS LST1O S80/85	1
1	88356-33103GT	SWITCH,LIMIT TABULATED,BLUE	1
2	119761GT	CONN PLUG 2 WAY EXTEND DT	1
2-	60425GT	CONN, PLUG, 2 WAY, DEUTSCH, DT, LOCK	

311.109 Harness, PROX, Manifold, PLAT

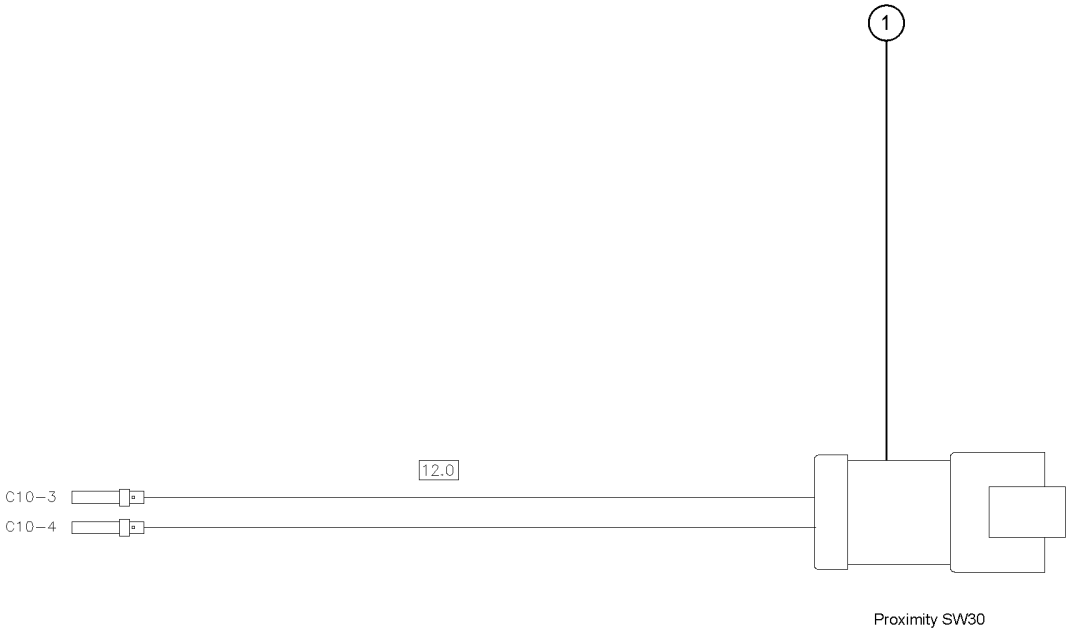

311.109 Harness, PROX, Manifold, PLAT

Item	*Part No.*	*Description*	*Qty.*
-	1269734GT	HARNESS, PROX, MANIFOLD, PLAT	1
1	119065GT	CONN, RECEP, 2 WAY, DEUTSCH, DT	1
1-	60439GT	CONN, RECEP, 2 WAY, DEUTSCH, DT, LOCK	

311.110 Harness, LSB2S, S80/85

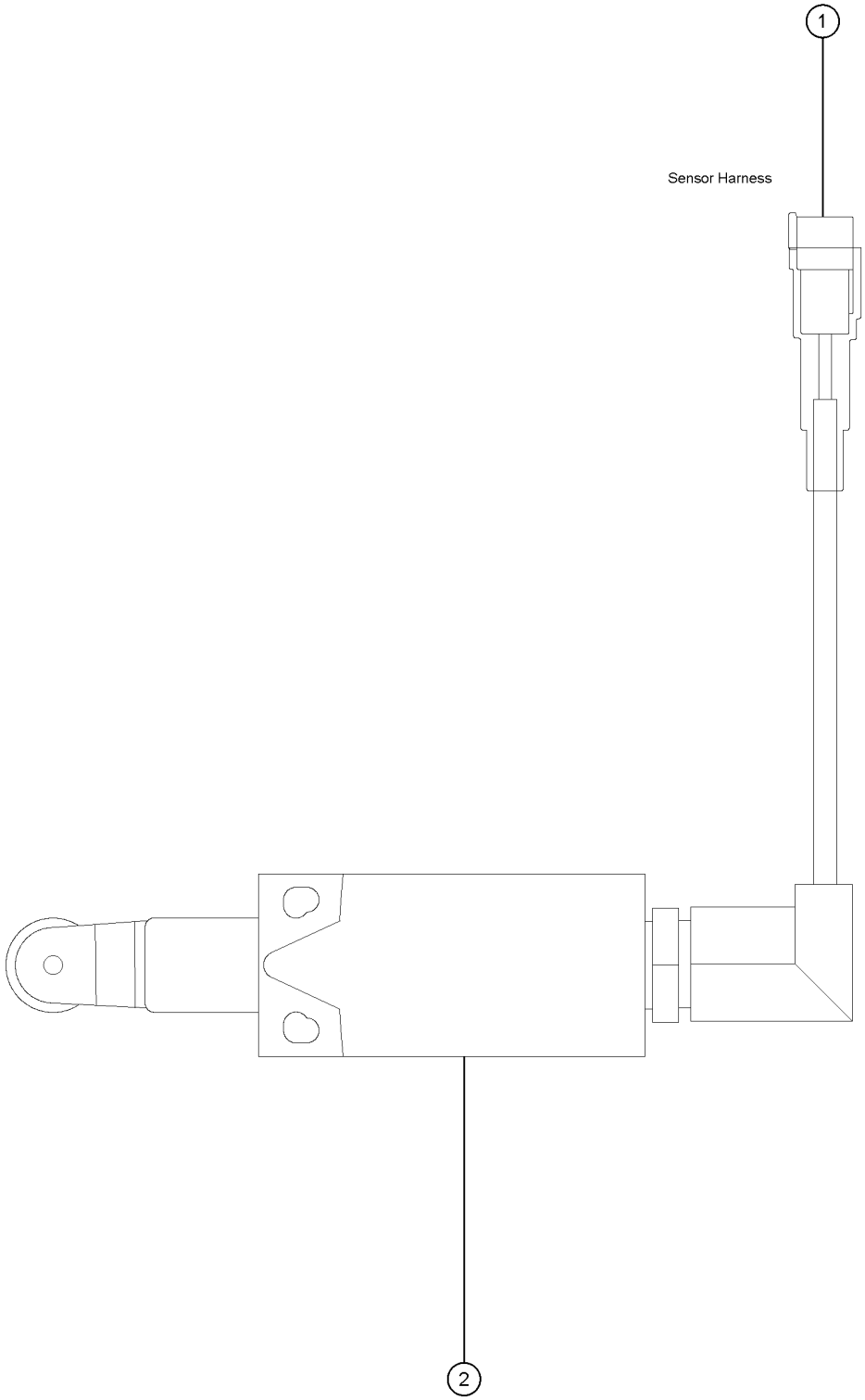

311.110 Harness, LSB2S, S80/85

Item	*Part No.*	*Description*	*Qty.*
-	1269717GT	HARNESS, LSB2S, S80/85	1
1	119065GT	CONN, RECEP, 2 WAY, DEUTSCH, DT	1
1-	60439GT	CONN, RECEP, 2 WAY, DEUTSCH, DT, LOCK	
2	88356-13107GT	SWITCH,LIMIT,TABULATE,BLUE	1

311.111 Harness, Boom Sensors

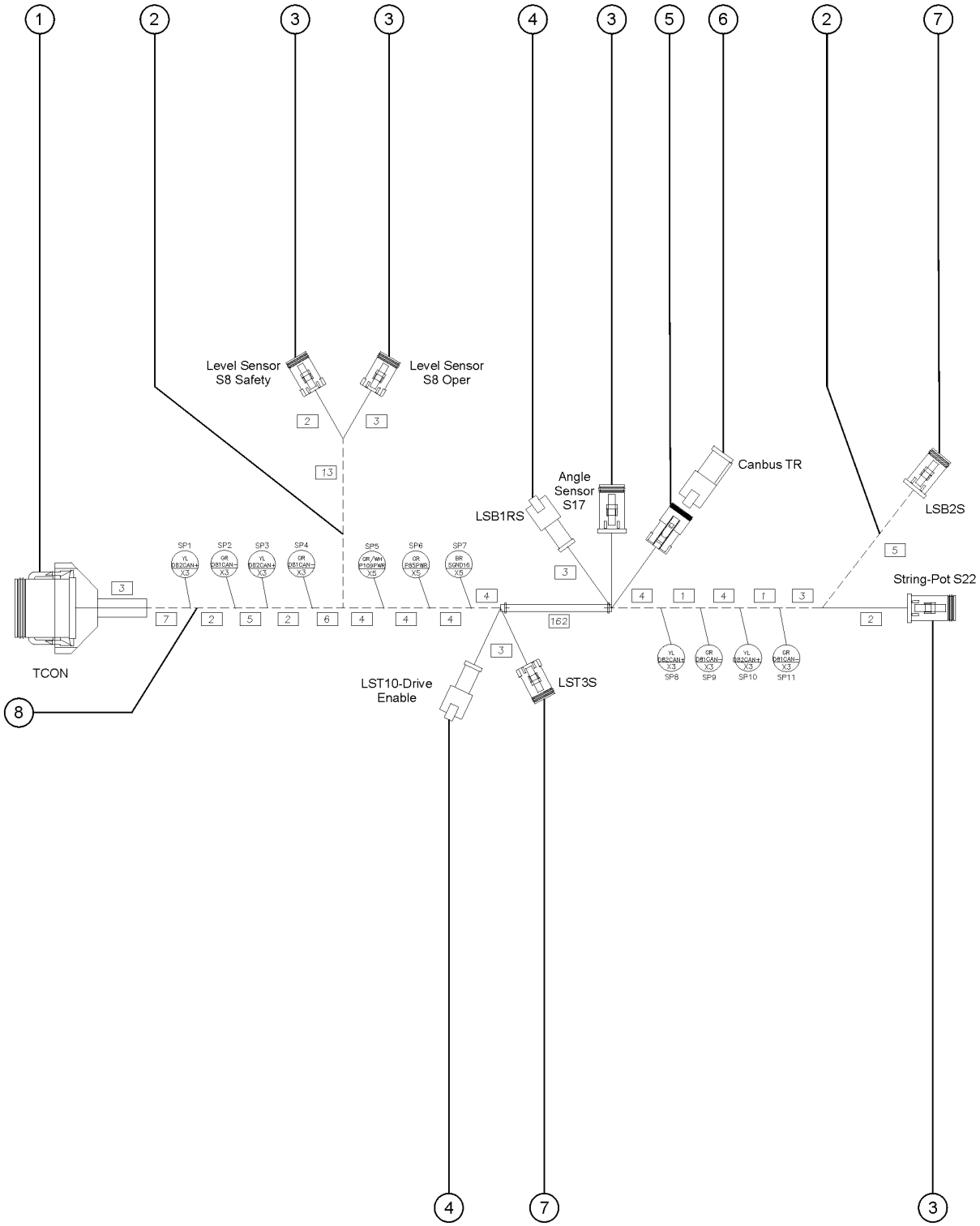

311.111 Harness, Boom Sensors

Item	Part No.	Description	Qty.
-	1274449GT	HARNESS, BOOM SENSORS	1
1	119061GT	CONN, PLUG, 12 WAY, DEUTSCH, DT, GRAY	1
1-	60435GT	LOCK, PLUG 12WAY, 14-18GA, GRN	
2	20973GT	WIRE LOOM,3/8 POLY SLIT	22 Inches
3	119058GT	CONN, PLUG, 4 WAY, DEUTSCH, DT, ENDCAP	4
3-	60429GT	LOCK, PLUG 4WAY, 14-18GA	
4	119065GT	CONN, RECEP, 2 WAY, DEUTSCH, DT	2
4-	60439GT	CONN, RECEP, 2 WAY, DEUTSCH, DT, LOCK	
5	1266608GT	CONN,PLUG,3 WAY,ENDCAP,DT,20AW	1
5-	60459GT	LOCK,PLUG 3 WAY,SAE J1939	
6	60452GT	CONN, RECEP, 3 WAY, DEUTSCH, DT, J1939/120OHM	1
7	119056GT	CONN, PLUG, 2 WAY, DEUTSCH, DT, ENDCAP	2
7-	60425GT	CONN, PLUG, 2 WAY, DEUTSCH, DT, LOCK	
8	39908GT	WIRE LOOM,1/2 DIA.	58 Inches

311.112 Assembly, Footswitch

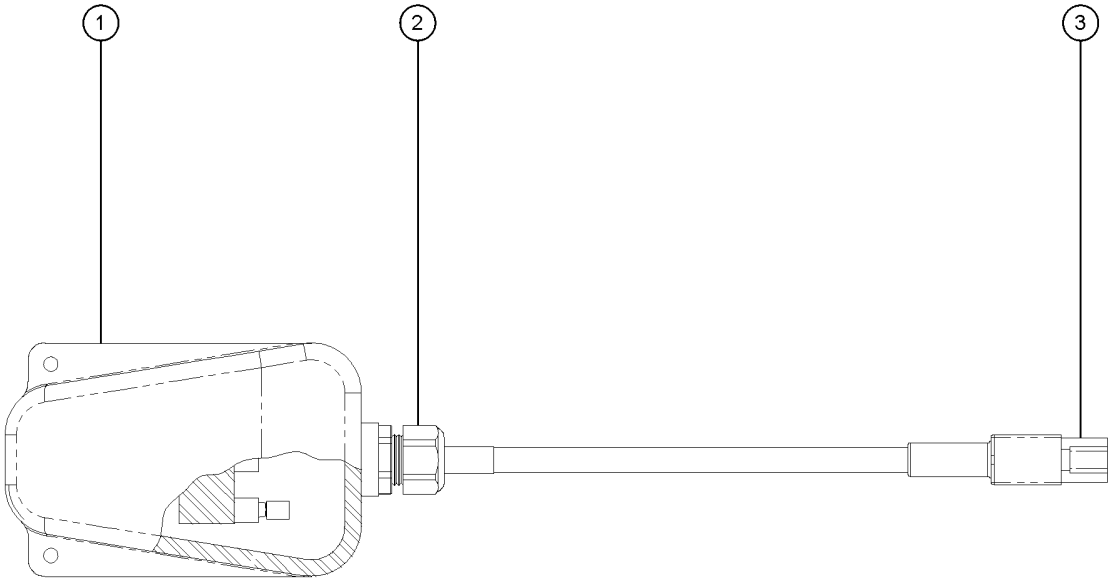

311.112 Assembly, Footswitch

Item	*Part No.*	*Description*	*Qty.*
-	227618GT	ASSEMBLY,FOOTSWITCH	1
1	227564GT	FOOT SWITCH,20A IP65	1
2	33576GT	CONN,SQZ,1/2NPT,.170-.450	1
3	119065GT	CONN, RECEP, 2 WAY, DEUTSCH, DT	1
3-	60439GT	CONN, RECEP, 2 WAY, DEUTSCH, DT, LOCK	

311.113 Harness, PROX Sensor, ACP

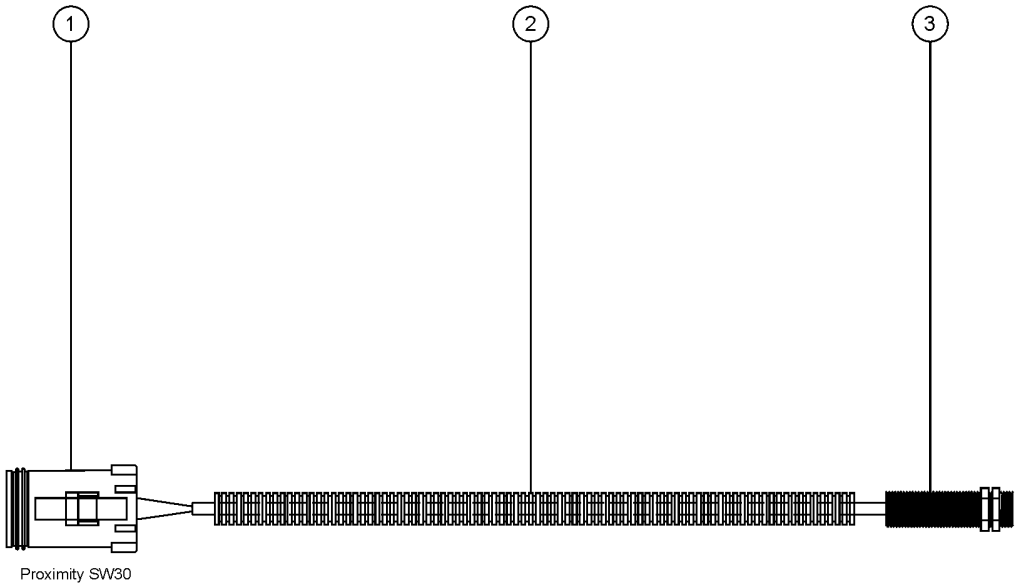

311.113 Harness, PROX Sensor, ACP

Item	*Part No.*	*Description*	*Qty.*
-	1269721GT	HARNESS, PROX SENSOR,ACP	1
1	119056GT	CONN, PLUG, 2 WAY, DEUTSCH, DT, ENDCAP	1
1-	60425GT	CONN, PLUG, 2 WAY, DEUTSCH, DT, LOCK	1
2	99087GT	WIRE LOOM,1/4 DIA. SLIT	44 Inches
3	27391GT	PROXIMITY SENSOR***	1

311.114 Harness, Lights, Work

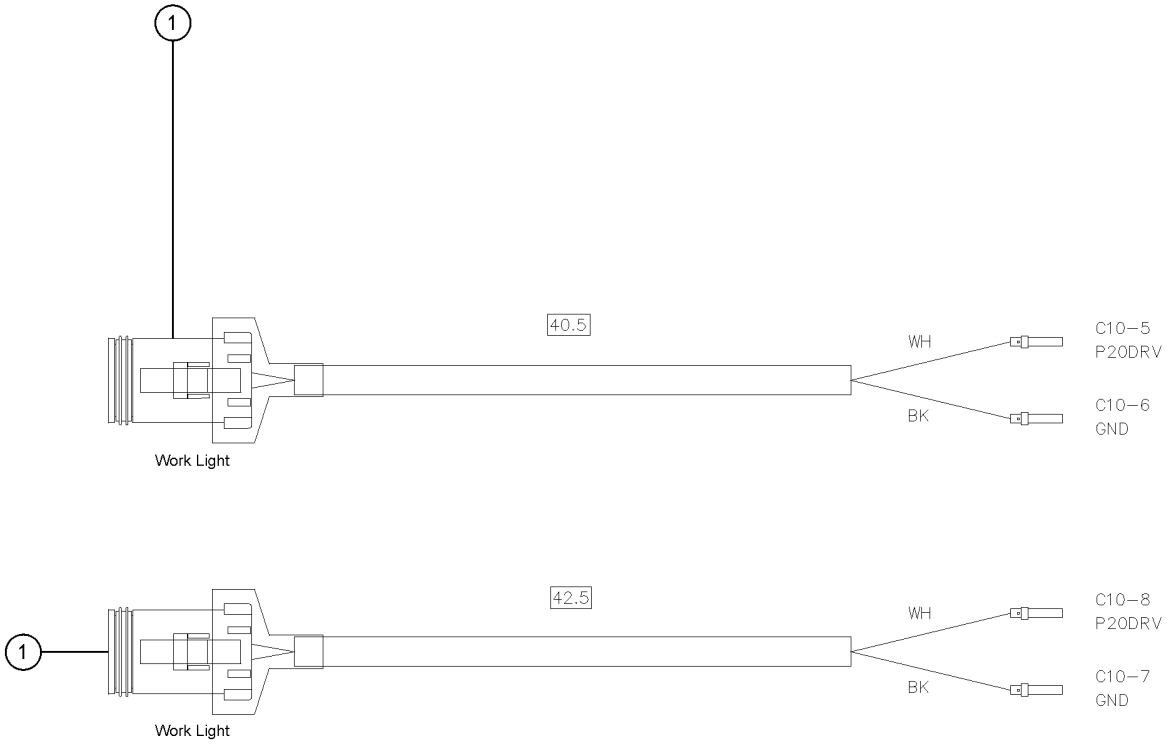

311.114 Harness, Lights, Work

Item	*Part No.*	*Description*	*Qty.*
-	1269720GT	HARNESS, LIGHTS, WORK	1
1	119056GT	CONN, PLUG, 2 WAY, DEUTSCH, DT, ENDCAP	2
1-	60425GT	CONN, PLUG, 2 WAY, DEUTSCH, DT, LOCK	

311.115 Harness, Recirculation, Plat

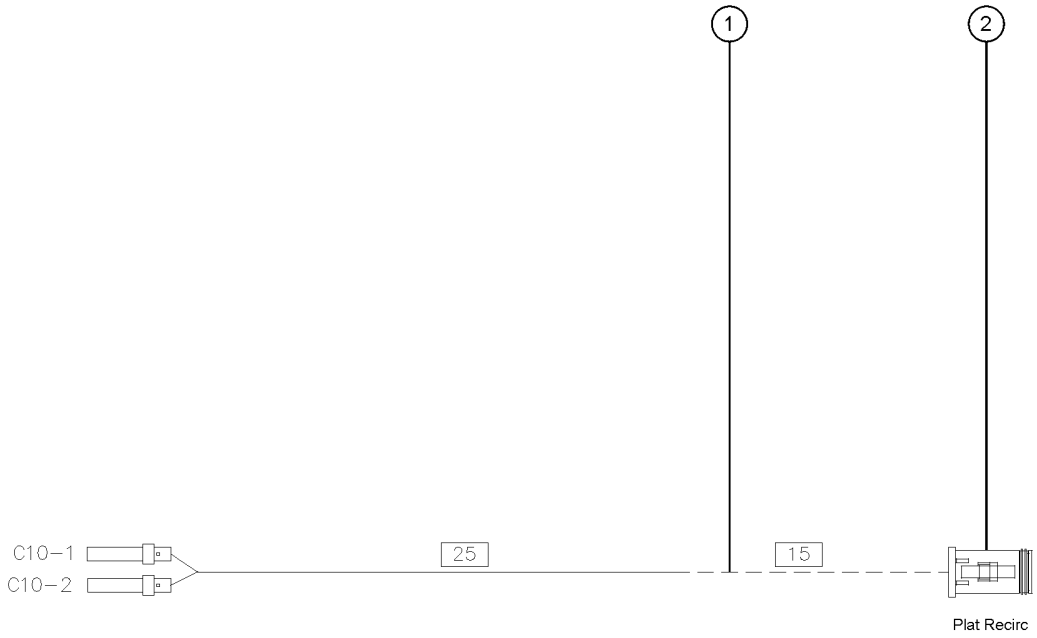

311.115 Harness, Recirculation, Plat

Item	*Part No.*	*Description*	*Qty.*
-	1269722GT	HARNESS, RECIRCULATION, PLAT	1
1	99087GT	WIRE LOOM,1/4 DIA. SLIT	15 Inches
1-	119056GT	CONN, PLUG, 2 WAY, DEUTSCH, DT, ENDCAP	1
2	60425GT	CONN, PLUG, 2 WAY, DEUTSCH, DT, LOCK	

311.116 Harness, Lights, Drive

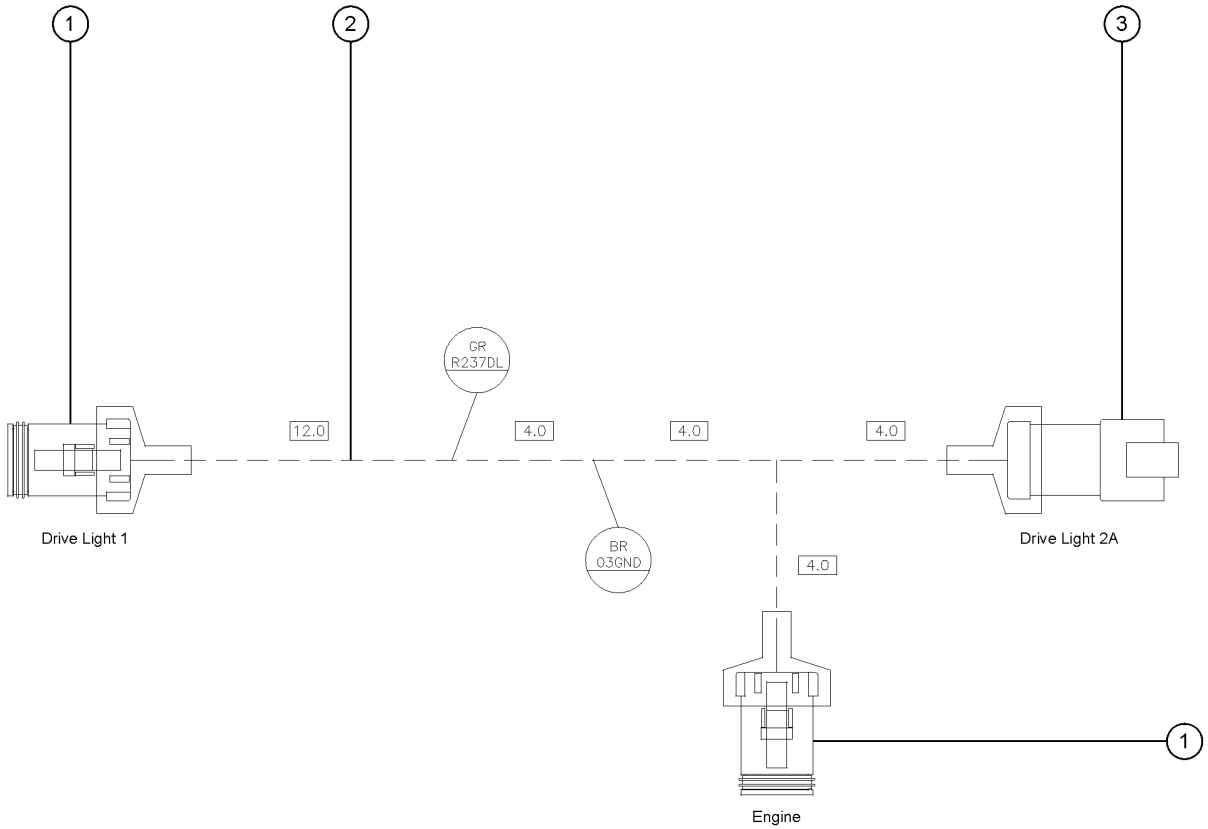

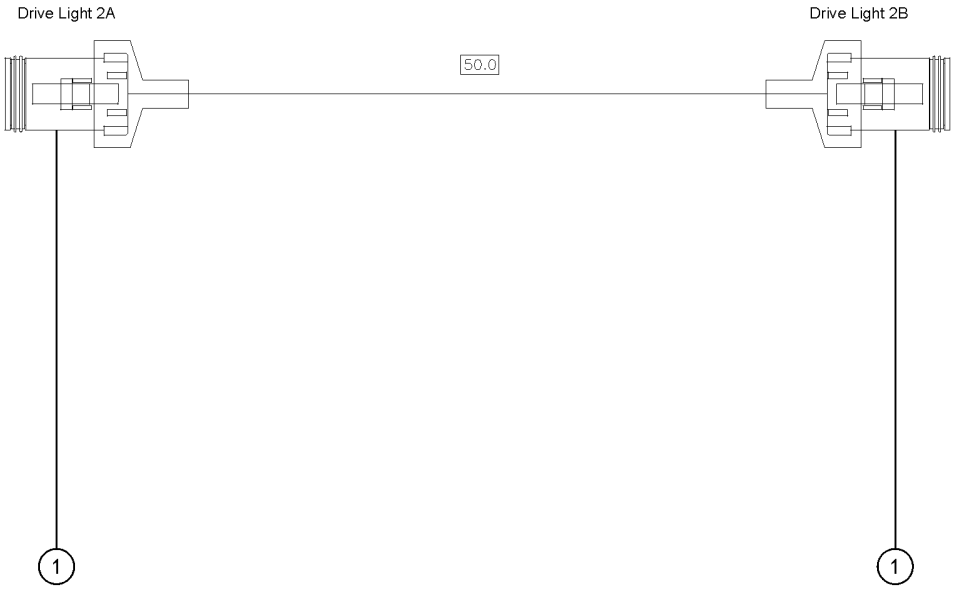

311.116 Harness, Lights, Drive

Item	*Part No.*	*Description*	*Qty.*
-	1269724GT	HARNESS, LIGHTS, DRIVE	1
1	119056GT	CONN, PLUG, 2 WAY, DEUTSCH, DT, ENDCAP	4
1-	60425GT	CONN, PLUG, 2 WAY, DEUTSCH, DT, LOCK	
2	20973GT	WIRE LOOM,3/8 POLY SLIT	25 Inches
3	119065GT	CONN, RECEP, 2 WAY, DEUTSCH, DT	1
3-	60439GT	CONN, RECEP, 2 WAY, DEUTSCH, DT, LOCK	

311.117 Harness Cooler Hydraulic

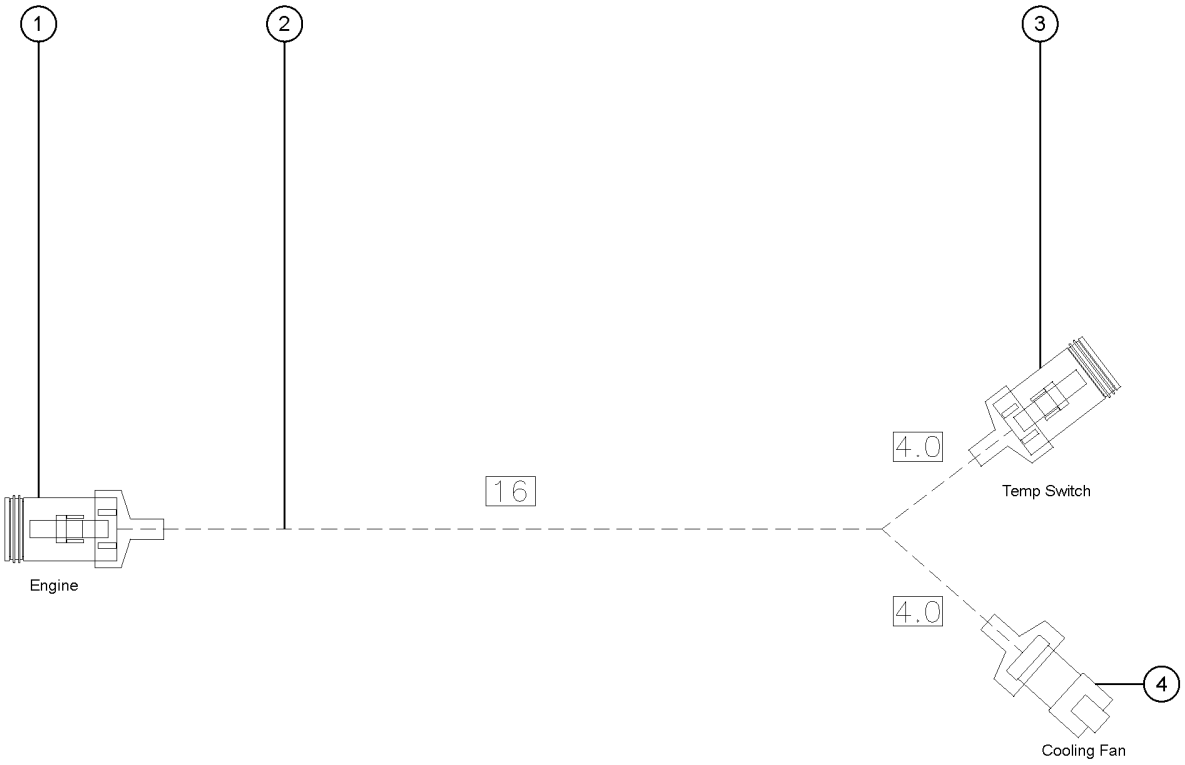

311.117 Harness Cooler Hydraulic

Item	Part No.	Description	Qty.
-	1269725GT	HARNESS COOLER HYDRAULIC	1
1	119058GT	CONN, PLUG, 4 WAY, DEUTSCH, DT, ENDCAP	1
1-	60429GT	LOCK, PLUG 4WAY, 14-18GA	
2	53471GT	WIRE LOOM,3/8 NYLON,HI TEMP	20 Inches
3	119056GT	CONN, PLUG, 2 WAY, DEUTSCH, DT, ENDCAP	1
3-	60425GT	CONN, PLUG, 2 WAY, DEUTSCH, DT, LOCK	
4	119065GT	CONN, RECEP, 2 WAY, DEUTSCH, DT	1
4-	60439GT	CONN, RECEP, 2 WAY, DEUTSCH, DT, LOCK	

311.117A Harness, Oil Cooler, Lift Power

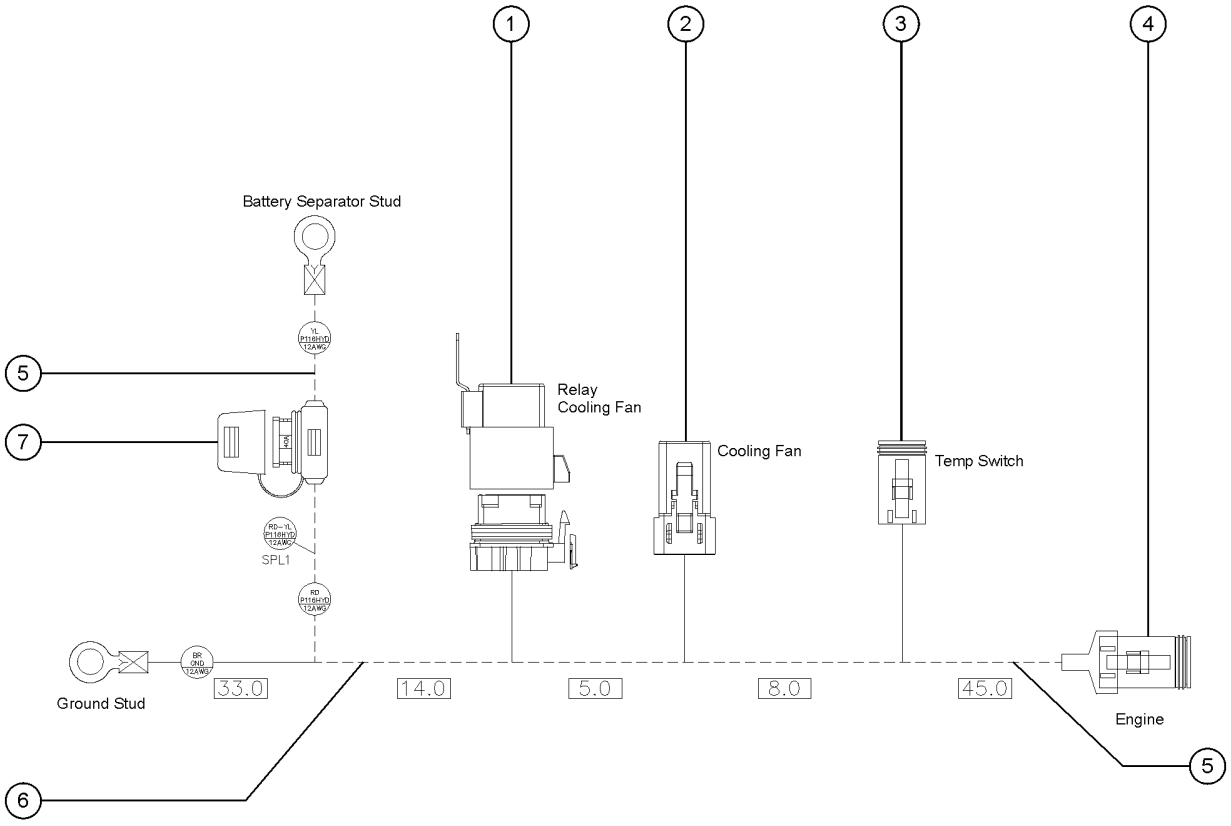

311.117A Harness, Oil Cooler, Lift Power

Item	Part No.	Description	Qty.
-	1254360GT	HARNESS, OIL COOLER, LIFT POWER	1
1	60521GT	RELAY,SEALED 30/40 AMP	1
1-	1261815GT	SOCKET,SEALED RELAY,4WAY BLUE	
1-	1261818GT	LOCK, CPA AXIAL,GRN, DELPHI	
2	60531GT	CONN,PLUG 2 WAY,12-14GA	1
2-	60532GT	LOCK,PLUG 2 WAY,12-14GA	
3	119056GT	CONN, PLUG, 2 WAY, DEUTSCH, DT, ENDCAP	1
3-	60425GT	CONN, PLUG, 2 WAY, DEUTSCH, DT, LOCK	
4	119058GT	CONN, PLUG, 4 WAY, DEUTSCH, DT, ENDCAP	1
4-	60429GT	LOCK, PLUG 4WAY, 14-18GA	
5	99087GT	WIRE LOOM,1/4 DIA. SLIT	56 Inches
6	20973GT	WIRE LOOM,3/8 POLY SLIT	27 Inches
7	1284348GT	FUSE,40 AMP,ATC	1
7-	67504GT	FUSE HOLDER,ATC 3-30 AMPS	1

311.118 Harness, Limit Switch ASSY, LST3S, S80/85XC, EPL

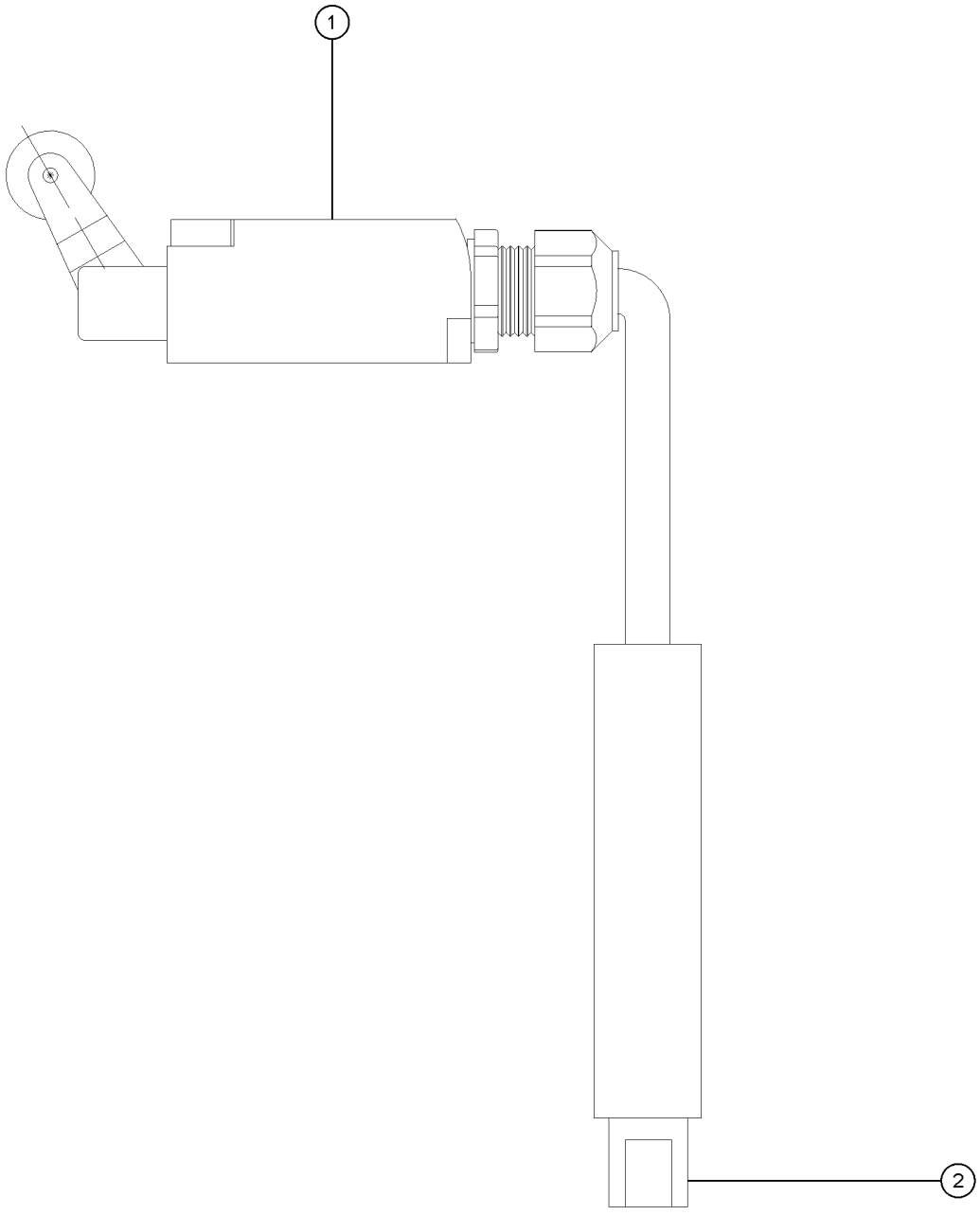

311.118 Harness, Limit Switch ASSY, LST3S, S80/85XC, EPL

Item	*Part No.*	*Description*	*Qty.*
-	1306209GT	HARNESS, LIMIT SWITCH ASSY, LST3S, S80/85XC, EPL	1
1	88356-12B43GT	LIMIT SWITCH, TAB BLUE, LST3S, S80/85XC	1
2	119065GT	CONN, RECEP, 2 WAY, DEUTSCH, DT	1
2-	60439GT	CONN, RECEP, 2 WAY, DEUTSCH, DT, LOCK	1

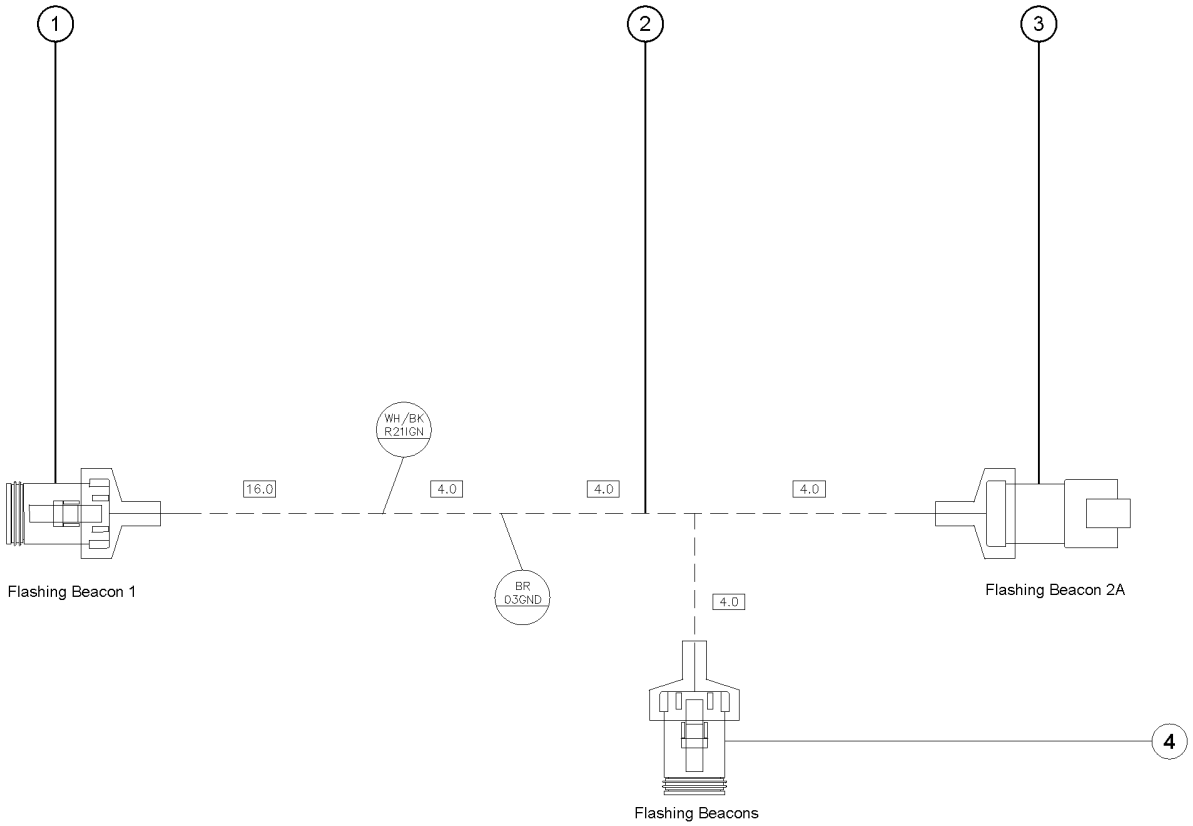
1
2
3
WH/BK
R21IGN
16.0
4.0
4.0
4.0
BR
03GND
4.0
Flashing Beacon 1
Flashing Beacon 2A
Flashing Beacons
4

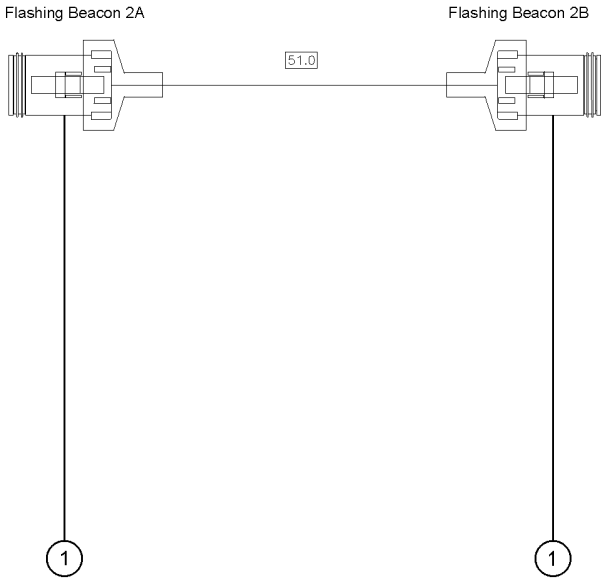
Flashing Beacon 2A
Flashing Beacon 2B
51.0
1
1

311.119 Harness, Beacons, Flashing

Item	*Part No.*	*Description*	*Qty.*
-	1269729GT	HARNESS,BEACONS,FLASHING	1
1	119056GT	CONN, PLUG, 2 WAY, DEUTSCH, DT, ENDCAP	3
1-	60425GT	CONN, PLUG, 2 WAY, DEUTSCH, DT, LOCK	
2	20973GT	WIRE LOOM,3/8 POLY SLIT	35 Inches
3	119065GT	CONN, RECEP, 2 WAY, DEUTSCH, DT	1
3-	60439GT	CONN, RECEP, 2 WAY, DEUTSCH, DT, LOCK	
4	119057GT	CONN, PLUG, 3 WAY, DEUTSCH, DT, ENDCAP	1
4-	60427GT	CONN, PLUG, 3 WAY, DEUTSCH, DT, LOCK	

311.120 Harness Manifold Function S80/85

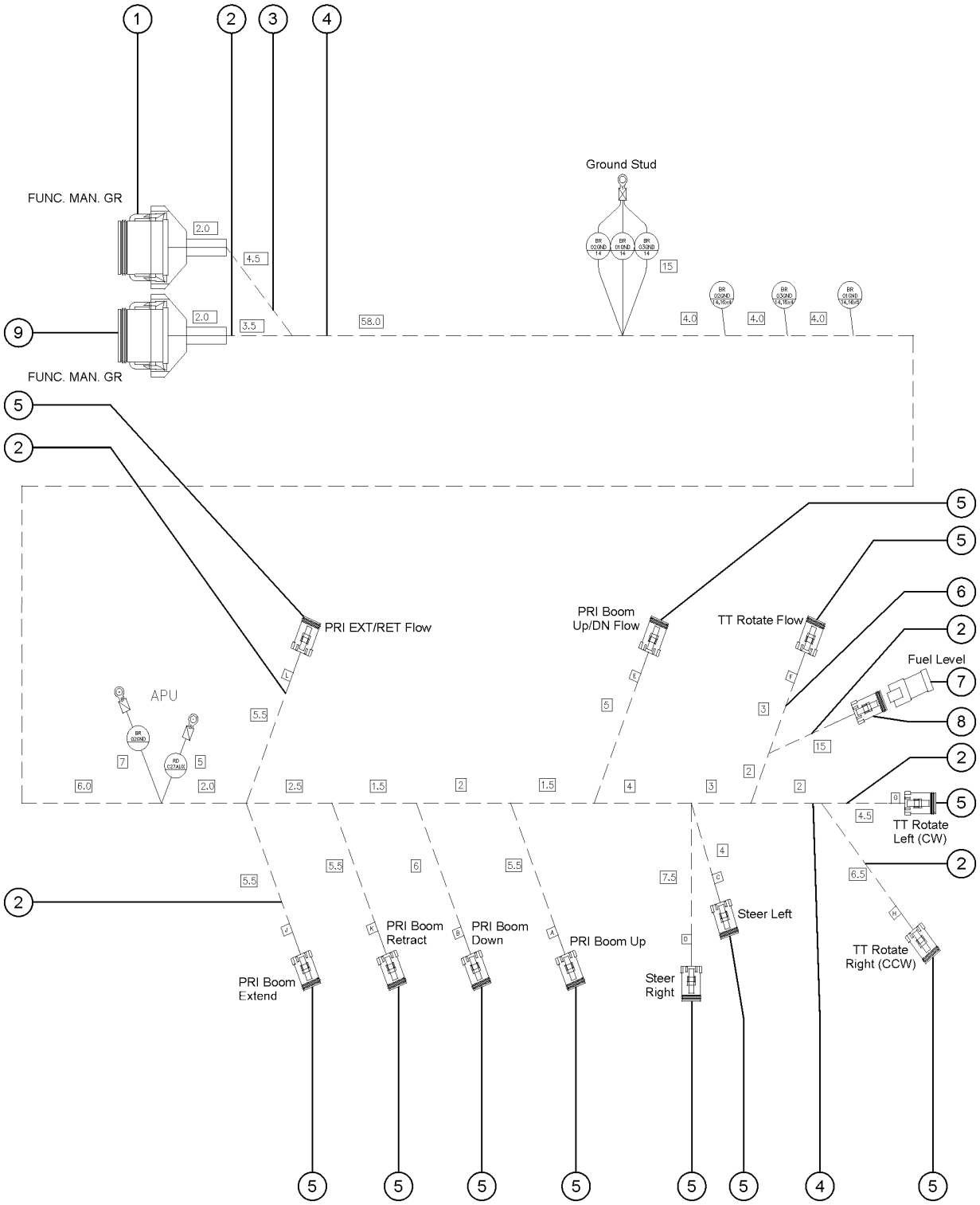

311.120 Harness Manifold Function S80/85

Item	Part No.	Description	Qty.
-	1269731GT	HARNESS MANIFOLD FUNCTION S80/85	1
1	119063GT	CONN PLUG 12 WAY ENDCAP DT GR	1
1-	60435GT	LOCK, PLUG 12WAY, 14-18GA, GRN	
2	99087GT	WIRE LOOM,1/4 DIA. SLIT	123 Inches
3	94652GT	WIRE LOOM,1/2DIA.SLIT HI-TEMP*	8 Inches
4	75640GT	WIRE LOOM,3/4 DIA.	94.5 Inches
5	119056GT	CONN, PLUG, 2 WAY, DEUTSCH, DT, ENDCAP	11
5-	60425GT	CONN, PLUG, 2 WAY, DEUTSCH, DT, LOCK	
6	20973GT	WIRE LOOM,3/8 POLY SLIT	8 Inches
7	119066GT	CONN, RECEP, 3 WAY, DEUTSCH, DT, ENDCAP	1
8	119057GT	CONN, PLUG, 3 WAY, DEUTSCH, DT, ENDCAP	1
8-	60427GT	CONN, PLUG, 3 WAY, DEUTSCH, DT, LOCK	
9	119064GT	CONN PLUG 12 WAY ENDCAP DT BR	1
9-	60435GT	LOCK, PLUG 12WAY, 14-18GA, GRN	

311.123 Harness, BATT2 TO APU(+),S80

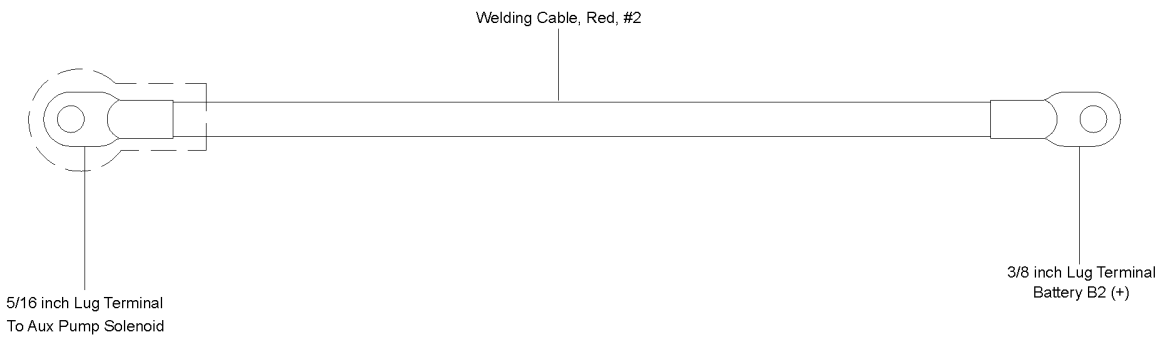

311.123 Harness, BATT2 TO APU(+),S80

Item	Part No.	Description	Qty.
-	121619GT	HARNESS,BATT2 TO APU(+),S80	1

311.124 Harness, BATT2 TO APU(-),S80

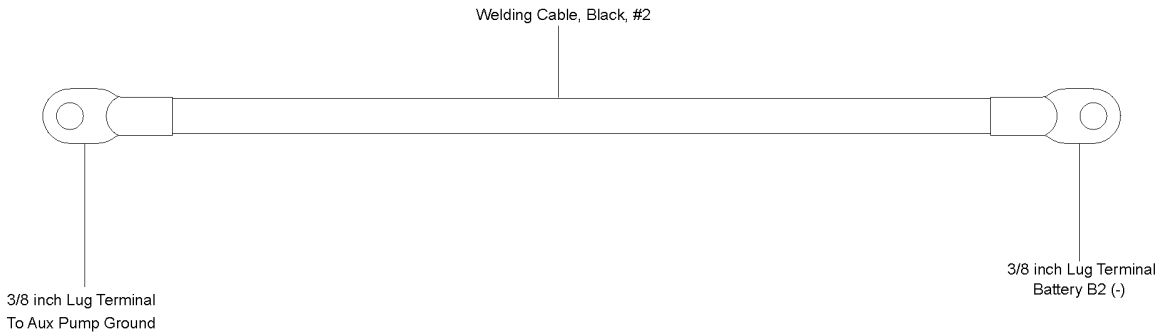

311.124 Harness, BATT2 TO APU(-),S80

Item	Part No.	Description	Qty.
-	121622GT	HARNESS,BATT2 TO APU(-),S80	1

311.125 Assembly Wire Separator Battery A

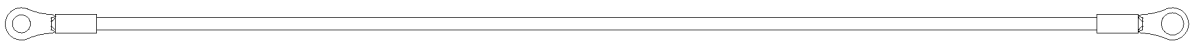

Item	*Part No.*	*Description*	*Qty.*
-	1279680GT	ASSEMBLY WIRE SEPARATOR BATTERY A	1

311.126 Harness Battery Negative

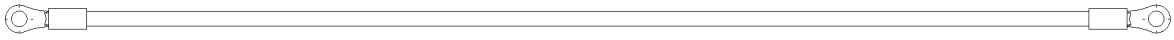

311.126 Harness Battery Negative

Item	*Part No.*	*Description*	*Qty.*
-	1274452GT	HARNESS BATTERY NEGATIVE	1

311.127 Assembly Wire Separator Battery M

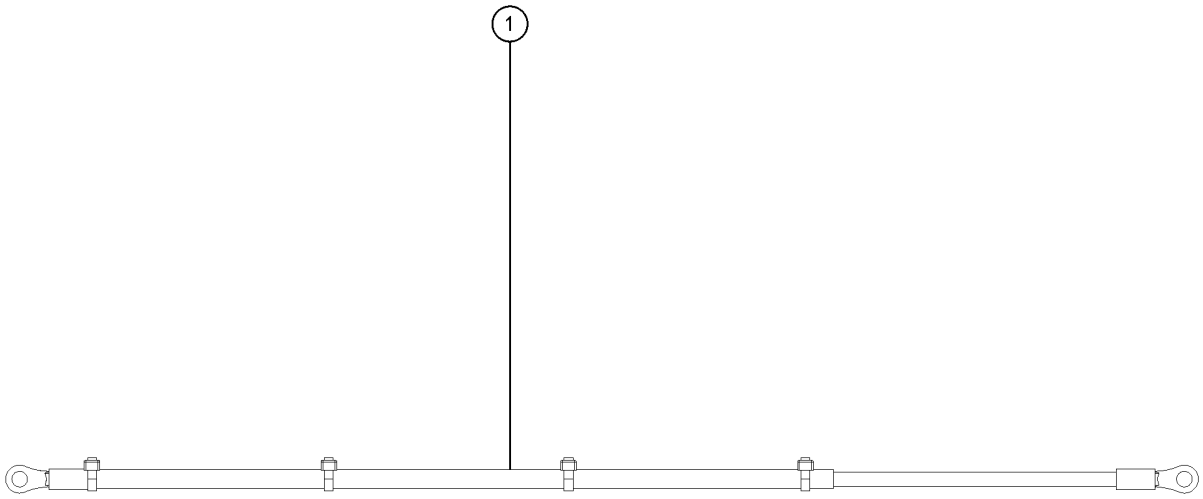

311.127 Assembly Wire Separator Battery M

Item	*Part No.*	*Description*	*Qty.*
-	1279679GT	ASSEMBLY WIRE SEPARATOR BATTERY M	1
1	20973GT	WIRE LOOM,3/8 POLY SLIT	16.5 Inches

311.128 Battery Cable,2/0,POS,RD,123"



311.128 Battery Cable,2/0,POS,RD,123"

Item	Part No.	Description	Qty.
-	121474GT	BATTERY CABLE,2/0,POS,RD,123"	1

311.128A Cable, Battery POS RED 136"

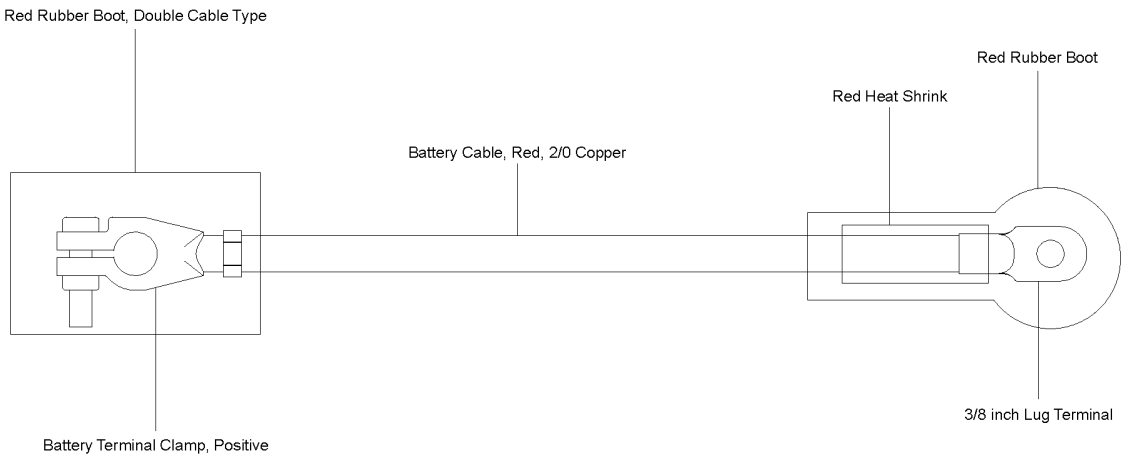

311.128A Cable, Battery POS RED 136"

Item	*Part No.*	*Description*	*Qty.*
-	826138GT	CABLE, BATTERY POS RED 136"	1

311.129 Cable, Battery Black 2/0 122"

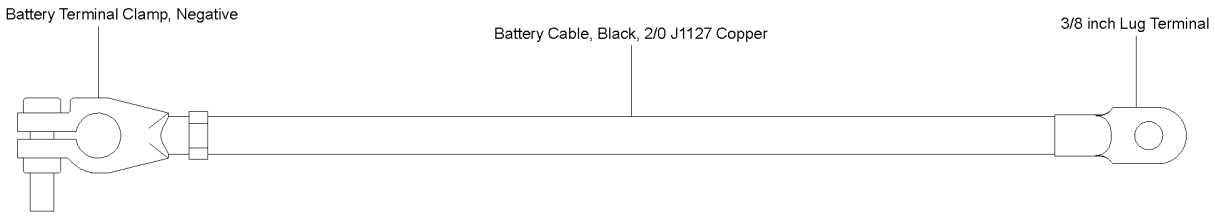

311.129 Cable, Battery Black 2/0 122"

Item	*Part No.*	*Description*	*Qty.*
-	1281128GT	CABLE, BATTERY BLACK 2/0 122"	1

311.129A Cable, Battery Black 2/0 128"

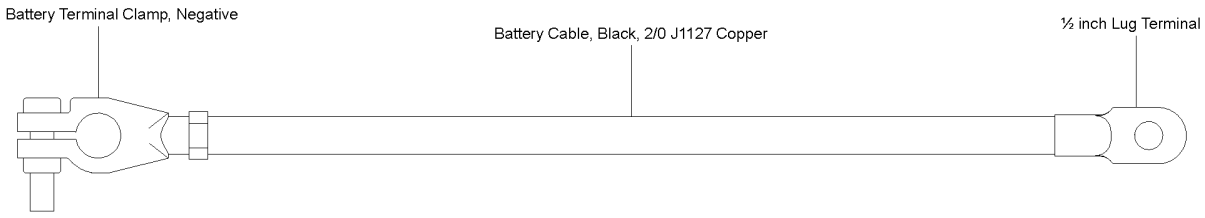

311.129A Cable, Battery Black 2/0 128"

Item	*Part No.*	*Description*	*Qty.*
-	1279875GT	CABLE, BATTERY BLACK 2/0 128"	1

311.130 Cable Assy, Red 2/0

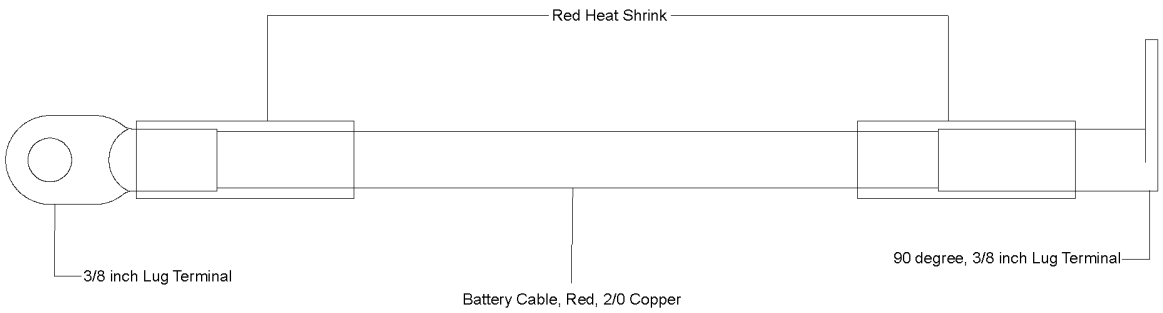

311.130 Cable Assy, Red 2/0

Item	*Part No.*	*Description*	*Qty.*
-	1269051GT	CABLE ASSY, RED 2/0	1

311.131 Cable, Red 2/0, 20"

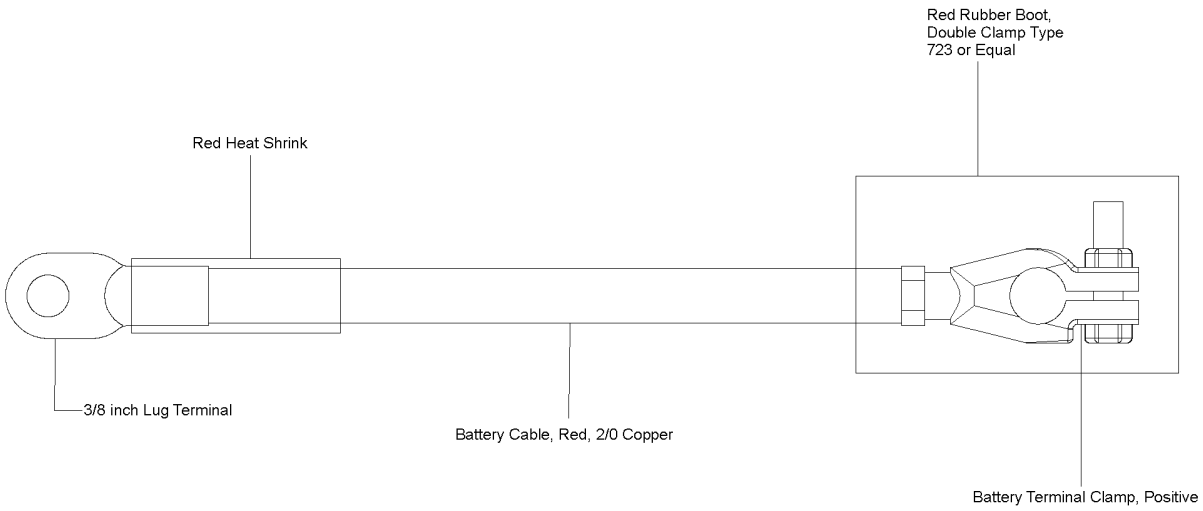

311.131 Cable, Red 2/0, 20"

Item	*Part No.*	*Description*	*Qty.*
-	1269060GT	CABLE, RED 2/0, 20"	1

311.132 Cable Assy, Black 2/0

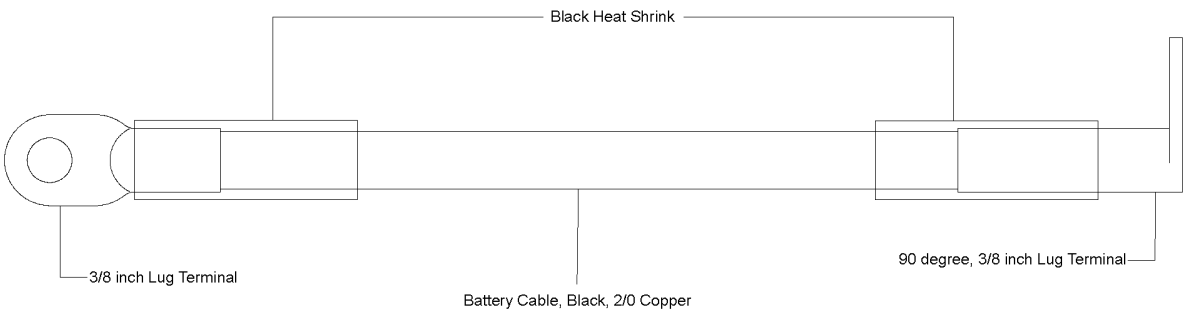

311.132 Cable Assy, Black 2/0

Item	*Part No.*	*Description*	*Qty.*
-	1269061GT	CABLE ASSY, BLACK 2/0	1

311.133 Harness, Hertz GPS,8"

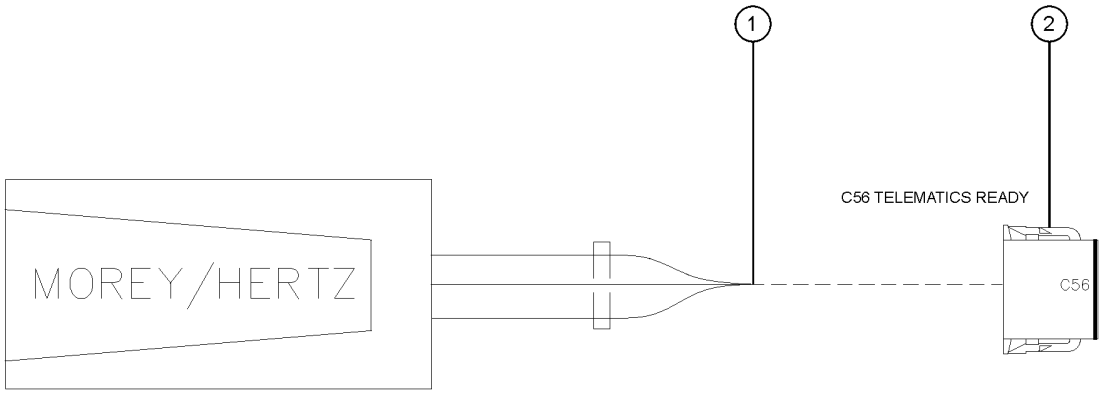

311.133 Harness, Hertz GPS,8"

Item	*Part No.*	*Description*	*Qty.*
-	1292346GT	HARNESS,HERTZ GPS,8"	1
1	99087GT	WIRE LOOM,1/4 DIA. SLIT	5 Inches
2	119061GT	CONN, PLUG, 12 WAY, DEUTSCH, DT, GRAY	1
2-	60435GT	LOCK, PLUG 12WAY, 14-18GA, GRN	1

311.133A Harness, Telematics, Topcon, 17IN

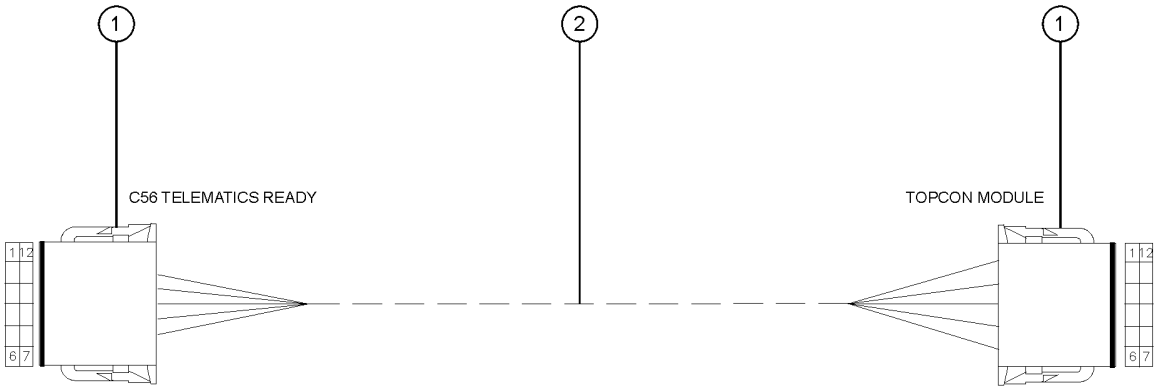

311.133A Harness, Telematics, Topcon, 17IN

Item	*Part No.*	*Description*	*Qty.*
-	1294289GT	HARNESS, TELEMATICS, TOPCON, 17IN	1
1	88331GT	CONN, PLUG, 12 WAY, DEUTSCH, DTM, GRAY, KEY-A	2
1-	88332GT	LOCK,PLUG 12 WAY DTM 18-20GA	2
2	20973GT	WIRE LOOM,3/8 POLY SLIT	14 Inches

311.133B Harness, Telematics, M8, ZTR

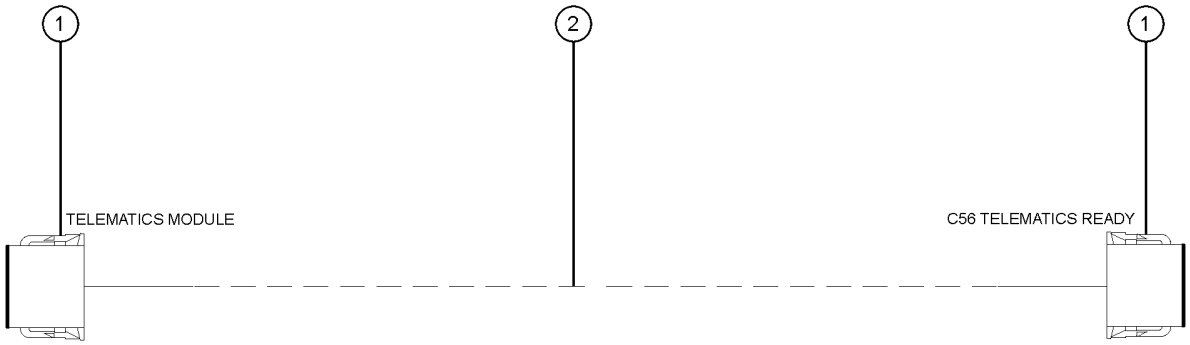

311.133B Harness, Telematics, M8, ZTR

Item	*Part No.*	*Description*	*Qty.*
-	1292180GT	HARNESS, TELEMATICS, M8, ZTR	1
1	119061GT	CONN, PLUG, 12 WAY, DEUTSCH, DT, GRAY	2
1-	60435GT	LOCK, PLUG 12WAY, 14-18GA, GRN	2
2	94652GT	WIRE LOOM,1/2DIA.SLIT HI-TEMP*	32 Inches

311.133C Harness, Telematics, ZTR, M5S



311.133C Harness, Telematics, ZTR, M5S

Item	Part No.	Description	Qty.
-	1261655GT	HARNESS,TELEMATICS,ZTR,M5S	1

311.133D Assembly, Telematics, TTU 2830

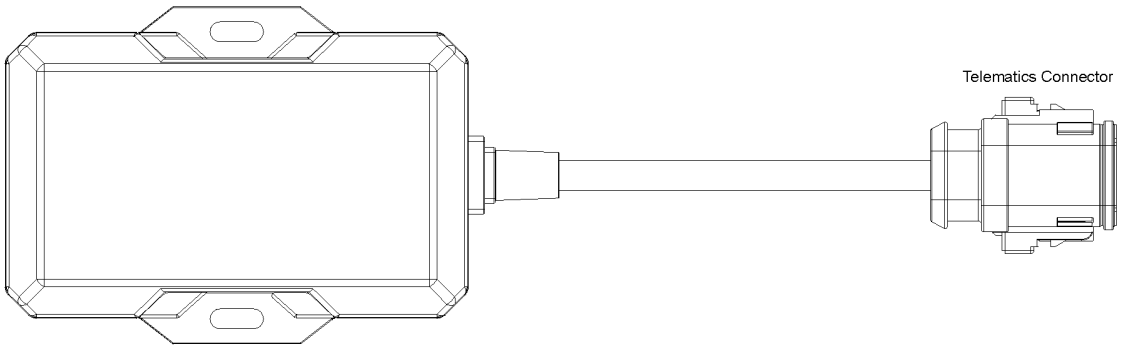

311.133D Assembly, Telematics, TTU 2830

Item	*Part No.*	*Description*	*Qty.*
-	1281095GT	ASSEMBLY,TELEMATICS, TTU 2830	1

312.1 Wire Harness Diagram, S-85 XC

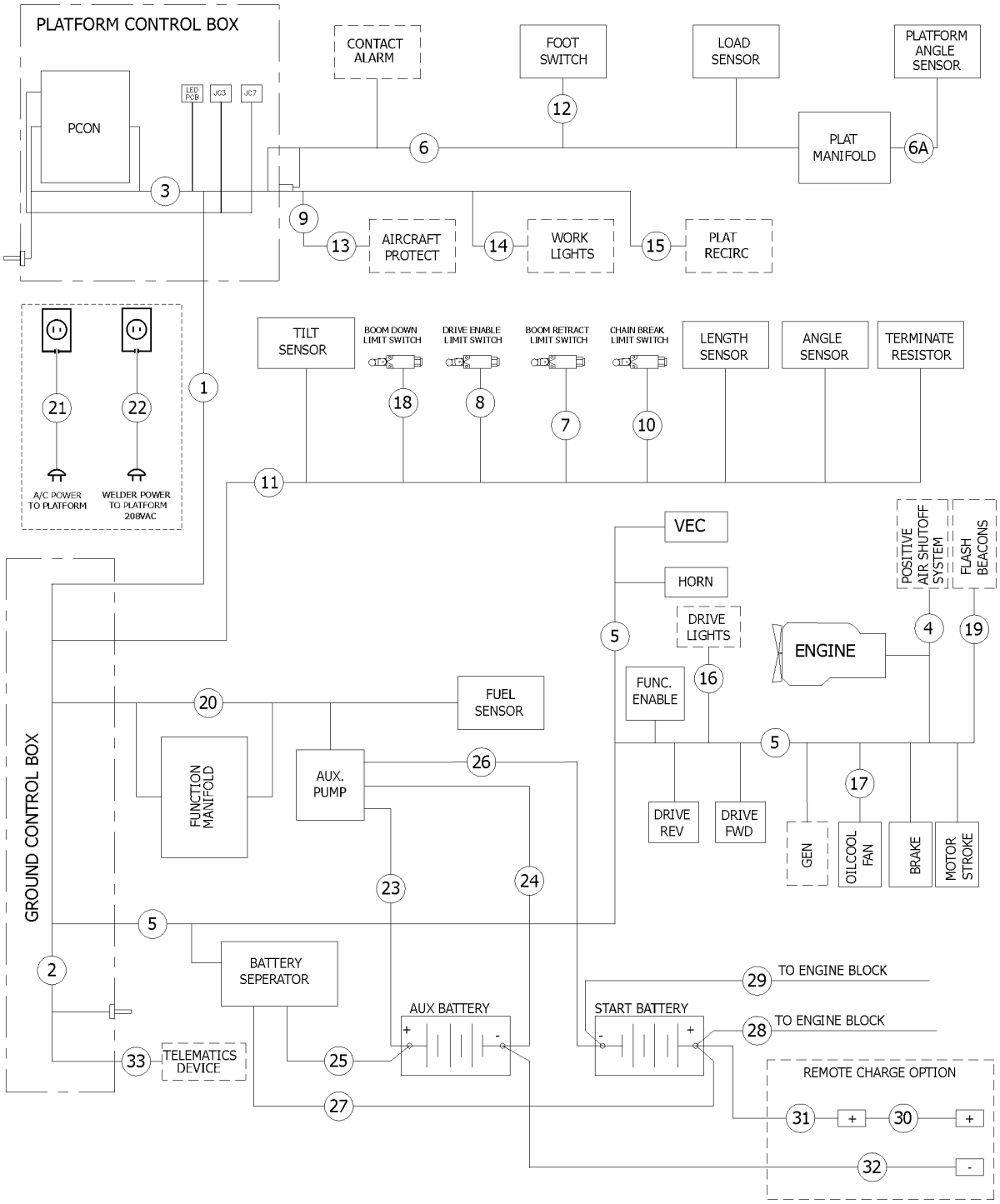

Item	Part No.	Description	Qty.
-		Ref. Wire Harness Assembly For the S-80 XC Wire Harness Diagram (Refer to 311.1)	
1	1269744GT	CABLE, BOOM, COMPOSITE, S85XC (Refer to 312_101)	1
1-	1280487-SGT	CABLE, COMPOSITE, J1939, 11C, 10/14/16/18(INCH)	1262 Inches
2-	1290501GT	HARNESS, GBOX, ALC600, TELEMATICS 2.0 (Refer to 311_102A) To S85XCH-3267	1
2	1309207GT	HARNESS GBOX, ALC600, TELEMATIC 2, HW (Refer to 311_102B) From S85XCH-3268	1
3	1306212GT	HARNESS, PBOX, ALC600, XC, EPL (Refer to 311_103)	1
3-	1258951GT	HARNESS, SWITCH, JIB, PCON (Refer to 312_103A)	1
4	1290849GT	HARNESS, CONTROL, PASS (Refer to 311_104)	1
5	1269698GT	HARNESS, ENGINE, PERKINS404D (Refer to 311_105) (Perkins 404D-22T)	1
5A	1269699GT	HARNESS,ENGINE, DEUTZ2.9T (Refer to 311_105A) (Deutz TD 2.9L4), (to SN S85XCH-4377)	1
5B	1312884GT	HARNESS, DEUTZ 2.2 CN4, S85 XC (Refer to 312_102), (from SN S85XCH-4378)	1
5C	1269700GT	HARNESS,ENGINE, DEUTZ2011 (Refer to 311_105B) (Deutz TD2011L04i)	1
5D	1269701GT	HARNESS, ENGINE, GM3.0 (Refer to 311_105C) (GM 3.0L)	1
5D-	1284757GT	BOOT, PLUG, 4 WAY, DTP, GY (part of harness 1269701GT)	1
5D-	1284724GT	BOOT, RECEP, 12 WAY, DT, GY (part of harness 1269701GT)	1
5E		HARNESS, DEUTZ 2.2 TIER IV, S80/85 XC (Refer to 311_105D) (Deutz 2.2 TIRE IV), (no longer available)	1
5F	1290930GT	HARNESS, DEUTZ 2.2 STAGE V, S80/85 XC (Refer to 311_105E) (Deutz 2.2 Stage V)	1
6	1306608GT	HARNESS, PLATFORM, MANIFOLD, ALC600, EPL (Refer to 311_106)	1
6A	1306211GT	HARNESS, EXT CABLE, CAN SENSOR, 18/4C (Refer to 311_106A)	
6B	1274450GT	HARNESS, PLATFORM MANIFOLD (Refer to 313_101)	
7	1269714GT	HARNESS, LSB1RS, S80/85 (Refer to 311_107) (Boom Retract Limit Switch)	1
8	1269715GT	HARNESS LST1O S80/85 (Refer to 311_108) (Drive Enable Limit Switch)	1
9	1269734GT	HARNESS, PROX, MANIFOLD, PLAT (Refer to 311_109)	1
10	1269717GT	HARNESS, LSB2S, S80/85 (Refer to 311_110) (Chain Break Limit Switch)	1
11	1274449GT	HARNESS, BOOM SENSORS (Refer to 311_111)	1
12	227618GT	ASSEMBLY,FOOTSWITCH (Refer to 311_112)	1
13	1269721GT	HARNESS, PROX SENSOR,ACP (Refer to 311_113)	1

312.1 Wire Harness Diagram, S-85 XC

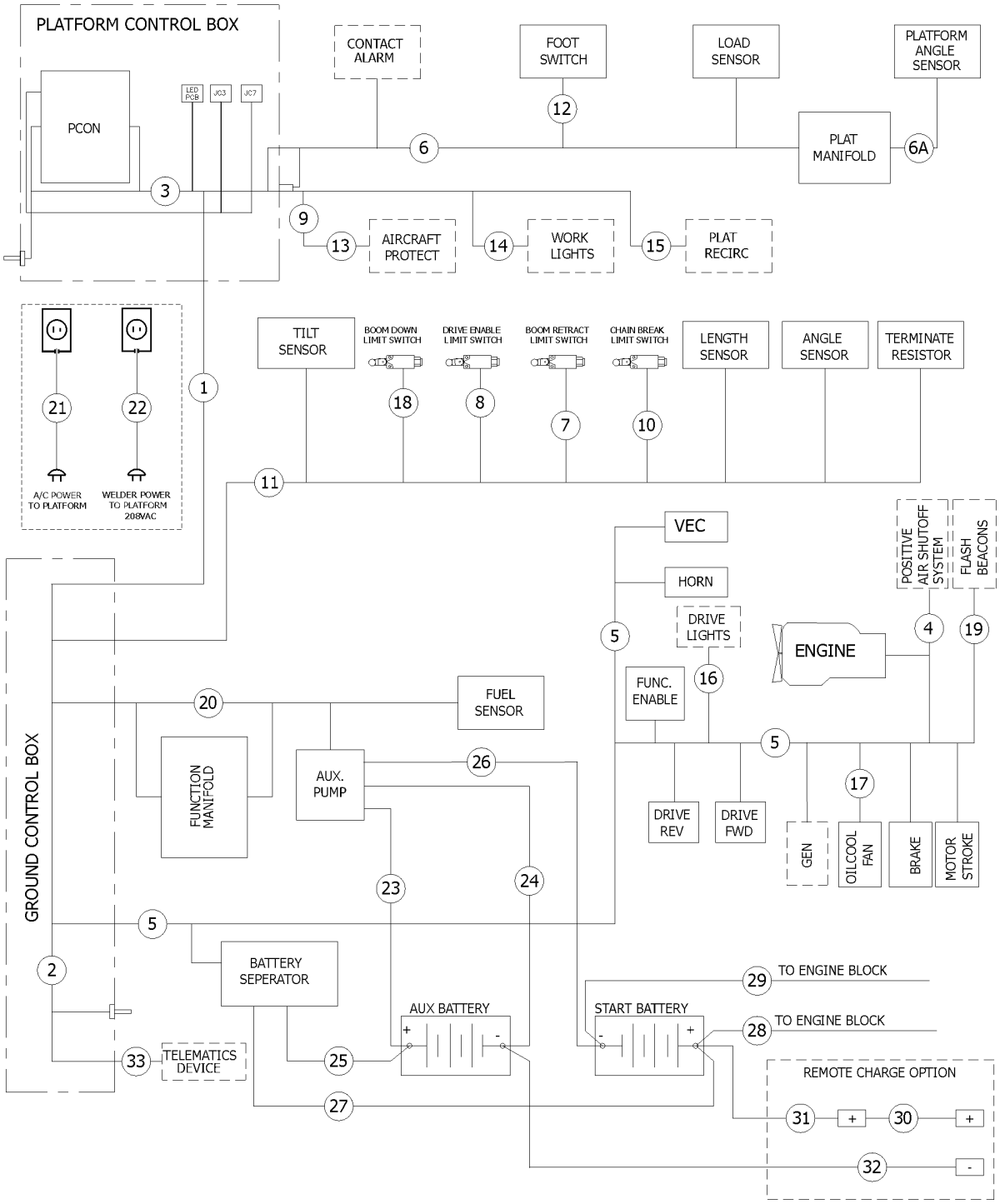

Item	Part No.	Description	Qty.
14	1269720GT	HARNESS, LIGHTS, WORK (Refer to 311_114)	2
15	1269722GT	HARNESS, RECIRCULATION, PLAT (Refer to 311_115)	1
16	1269724GT	HARNESS, LIGHTS, DRIVE (Refer to 311_116)	1
17	1269725GT	HARNESS COOLER HYDRAULIC (Refer to 311_117) (standard)	1
17-	1254360GT	HARNESS, OIL COOLER, LIFT POWER (Refer to 311_117A) (generator option)	1
18	1306209GT	HARNESS, LIMIT SWITCH ASSY, LST3S, S80/85XC, EPL (Refer to 311_118) (Boom Down Limit Switch)	1
19	1269729GT	HARNESS,BEACONS,FLASHING (Refer to 311_119)	1
20	1269731GT	HARNESS MANIFOLD FUNCTION S80/85 (Refer to 311_120)	1
21	1296207GT	CABLE, POWER TO PLAT, S85 XC, 12/3 CABLE	1
22	106115GT	WIRE CABLE 8 GA/4 CON.SO	1252 Inches
23	121619GT	HARNESS,BATT2 TO APU(+),S80 (Refer to 311_123)	1
24	121622GT	HARNESS,BATT2 TO APU(-),S80 (Refer to 311_124)	1
25	1279680GT	ASSEMBLY WIRE SEPARATOR BATTERY A (Refer to 311_125)	1
26	1274452GT	HARNESS BATTERY NEGATIVE (Refer to 311_126)	1
27	1279679GT	ASSEMBLY WIRE SEPARATOR BATTERY M (Refer to 311_127)	1
28	121474GT	BATTERY CABLE,2/0,POS,RD,123" (Refer to 311_128)	1
28-	826138GT	CABLE, BATTERY POS RED 136" (Refer to 311_128A)	1
29	1281128GT	CABLE, BATTERY BLACK 2/0 122" (Refer to 311_129)	1
29-	1279875GT	CABLE, BATTERY BLACK 2/0 128" (Refer to 311_129A)	1
30	1269051GT	CABLE ASSY, RED 2/0 (Refer to 311_130)	1
31	1269060GT	CABLE, RED 2/0, 20" (Refer to 311_131)	1
31-	101681GT	BOOT,BATTERY CABLE TERM,LG RED for 1269060	
32	1269061GT	CABLE ASSY, BLACK 2/0 (Refer to 311_132)	1
33	1292346GT	HARNESS,HERTZ GPS,8" (Refer to 311_133a) (from SN S85XCH-1538)	1
33A	1294289GT	HARNESS, TELEMATICS, TOPCON, 17IN (Refer to 311_133AA) (from SN S85XCH-1538)	1
33B	1292180GT	HARNESS, TELEMATICS, M8, ZTR (Refer to 311_133BB) (from SN S85XCH-1538)	1
33C	1261655GT	HARNESS,TELEMATICS,ZTR,M5S (Refer to 311_133C)	1

312.1 Wire Harness Diagram, S-85 XC

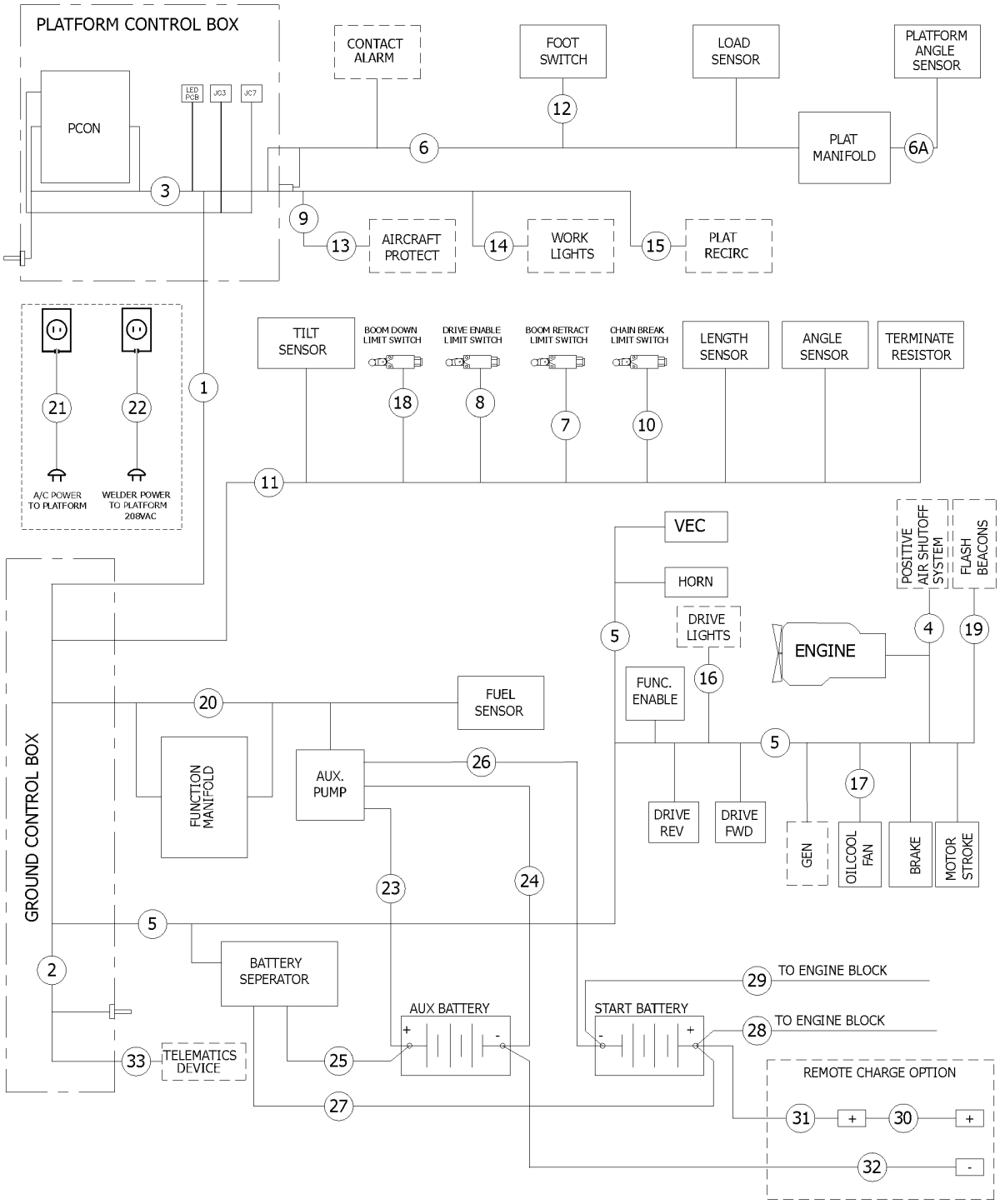

Item	Part No.	Description	Qty.
33D	1281095GT	ASSEMBLY,TELEMATICS, TTU 2830 ..... (Refer to 311_133D)	1

312.101 Cable, Boom, Composite, S85XC



312.101 Cable, Boom, Composite, S85XC

Item	*Part No.*	*Description*	*Qty.*
-	1269744GT	CABLE, BOOM, COMPOSITE, S85XC	1
-	1280487-SGT	CABLE, COMPOSITE, J1939, 11C, 10/14/16/18(INCH)	1262 Inches
1	60527GT	CONN, PLUG, 4 WAY, DEUTSCH, DTP	2
1-	60532GT	LOCK,PLUG 2 WAY,12-14GA	2
2	39908GT	WIRE LOOM,1/2 DIA.	19 Inches
3	119060GT	CONN, PLUG, 8 WAY, DEUTSCH, DT, ENDCAP/ GRAY	2
3-	60433GT	LOCK,PLUG 8 WAY, 14-18GA	2

312.102 Harness, Deutz 2.2 CN4, S85 XC

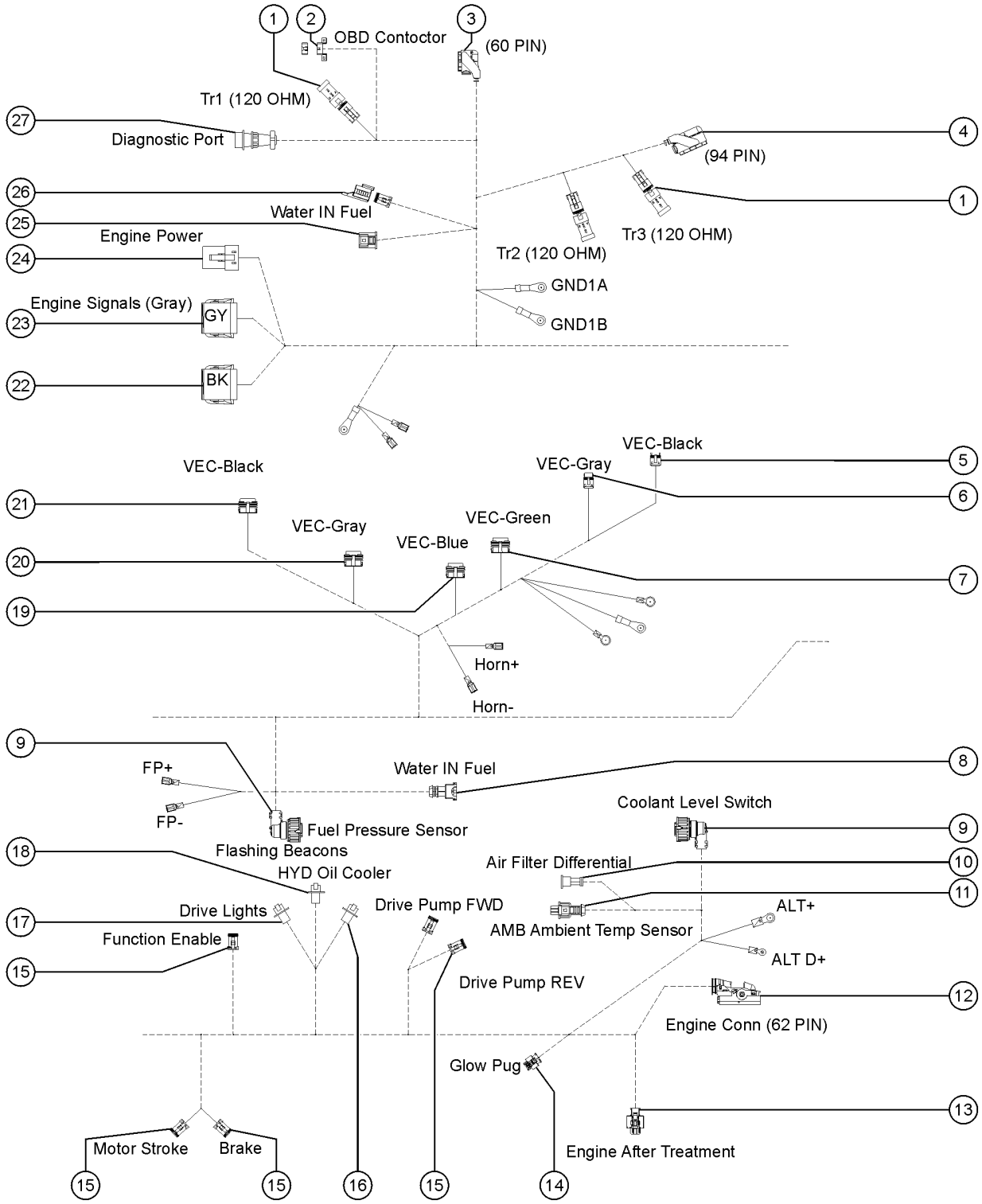

312.102 Harness, Deutz 2.2 CN4, S85 XC

Item	Part No.	Description	Qty.
1	60452GT	CONN, RECEP, 3 WAY, DEUTSCH, DT, J1939/120OHM	3
1-	119057GT	CONN, PLUG, 3 WAY, DEUTSCH, DT, ENDCAP	3
1-	60459GT	LOCK,PLUG 3 WAY,SAE J1939	
2	1312883GT	COVER, METRI-PACK 150	1
2-	1312880GT	CONN, 16WAY, METRI-PACK 150, DELPHI,OBD	
2-	1312881GT	LOCK,16WAY, METRI-PACK 16 BLU, DELPHI	
3	822438GT	CONN KIT,RECEP 60POS,AMP MQS 1.5	1
4	822439GT	CONN KIT,94POS,AMP MQS1.5/MCP2.8	1
5	822467GT	CONN,2WAY CBT MALE,BLACK	1
5-	822469GT	LOCK,2WAY CBT TP2 SEALED	
6	822468GT	CONN,2WAY CBT MALE,GRAY	1
7	822463GT	CONN,8WAY CBT MALE,GREEN	1
7-	822466GT	LOCK,8WAY CBT TP2 SEALED	
8	822440GT	CONN,RECEP 2 WAY,AMP JR PT	1
9	822445GT	CONN,CIRC. AMP 4WAY,BLACK	2
9-	1262857GT	SHELL,90DEG,CONN CIRC,AMP,NW8.5	
10	56687GT	CONN, RECEP, 2 WAY, AMP, JR-PWR	1
11	1290927GT	CONN, PLUG 2 WAY, BOSCH	1
12	822436GT	CONN,RECEP 62POS,AMP MCP1.5K/2.8	1
12-	822437GT	COVER,AMP 39/62POS CONNECTORS	
13	1290926GT	CONN,RECEP 8 WAY,AMP	1
14	822442GT	CONN,REC 2 WAY,AMP 8MM NGI, BLACK	1
15	119056GT	CONN, PLUG, 2 WAY, DEUTSCH, DT, ENDCAP	7
15-	60425GT	CONN, PLUG, 2 WAY, DEUTSCH, DT, LOCK	
16	73723GT	CONN RECEPT,FLANGED	1
16-	60443GT	LOCK, RECEP 4WAY, 14-18GA	
17	1269704GT	CONNECTOR, RECEP, 2WAY, FL	1
18	75629GT	CONN,RECEP 3 WAY,W/FLANGE	1

312.102 Harness, Deutz 2.2 CN4, S85 XC

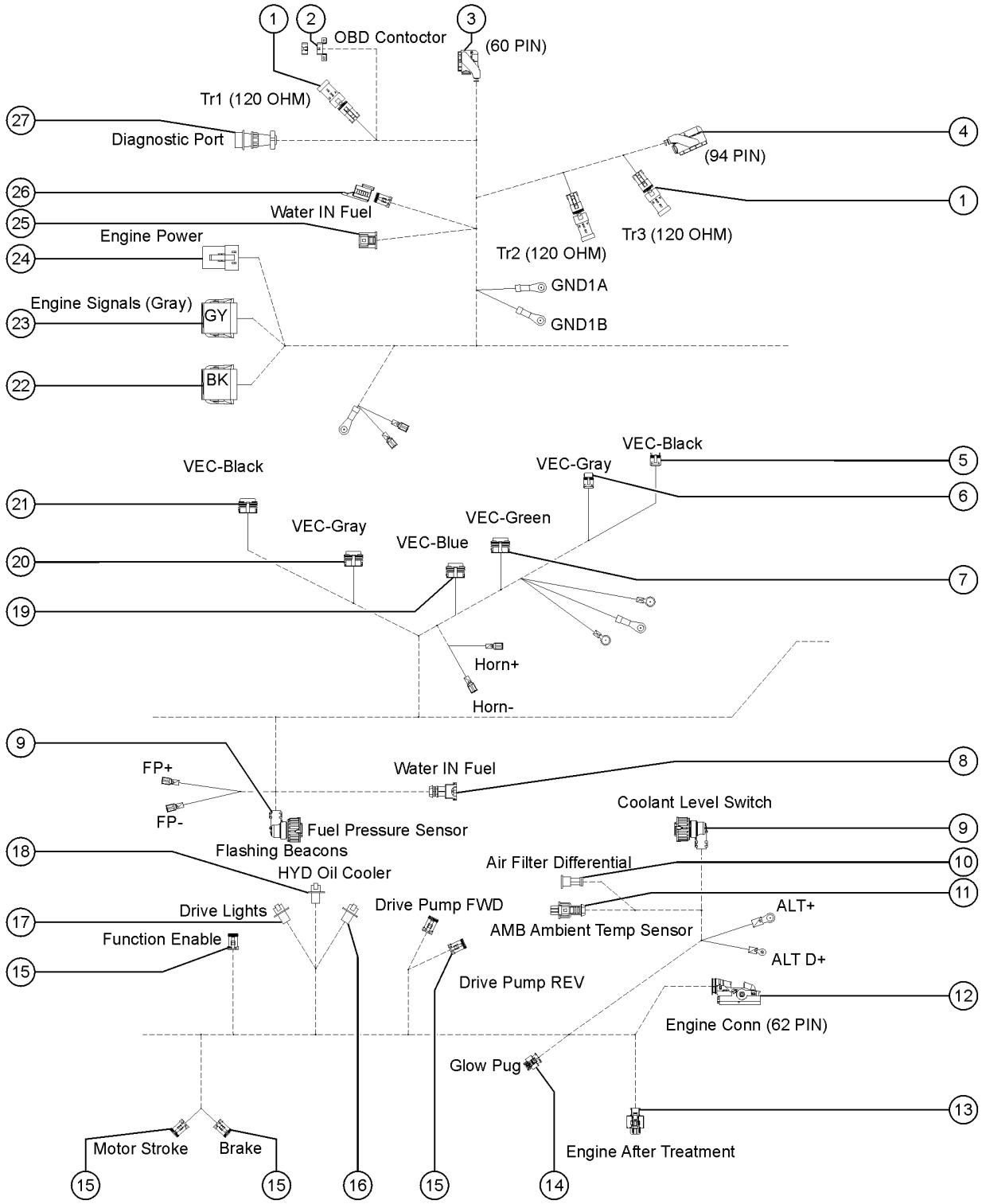

312.102 Harness, Deutz 2.2 CN4, S85 XC

Item	Part No.	Description	Qty.
18-	60441GT	CONN, RECEP, 3 WAY, DEUTSCH, DT, LOCK	
19	822462GT	CONN, PLUG, 8 WAY, EATON, METRI-PACK 150, BLUE	1
19-	822466GT	LOCK,8WAY CBT TP2 SEALED	
20	822465GT	CONN,8WAY CBT MALE,GRAY	1
20-	822466GT	LOCK,8WAY CBT TP2 SEALED	
21	822464GT	CONN,8WAY CBT MALE,BLACK	1
21-	822466GT	LOCK,8WAY CBT TP2 SEALED	
22	119062GT	CONN, PLUG, 12 WAY, DEUTSCH, DT, BLACK	1
22-	60435GT	LOCK, PLUG 12WAY, 14-18GA, GRN	
23	119061GT	CONN, PLUG, 12 WAY, DEUTSCH, DT, GRAY	1
23-	60435GT	LOCK, PLUG 12WAY, 14-18GA, GRN	
24	60527GT	CONN, PLUG, 4 WAY, DEUTSCH, DTP	1
24-	60528GT	LOCK,PLUG 4 WAY,12-14GA***	
25	1312876GT	CONN, PLUG, FURUKAWA, RFW, 16-18GA	1
25-	1312877GT	LOCK, PLUG,FURUKAWA, RFW, 16-18GA	
26	229110GT	CONN, RECEP, 2 WAY, DEUTSCH, DT, CAP	1
26-	119056GT	CONN, PLUG, 2 WAY, DEUTSCH, DT, ENDCAP	
26-	60425GT	CONN, PLUG, 2 WAY, DEUTSCH, DT, LOCK	
27	822448GT	CONN,REC,CANN TR 12WAY,SIZE14	1
27-	822449GT	DUST CAP,CANNON TR,SIZE 14	1
27-	822450GT	CLAMP,CABLE,CANNON SIZE 14	1

312.103A Harness, Switch, JIB, PCON

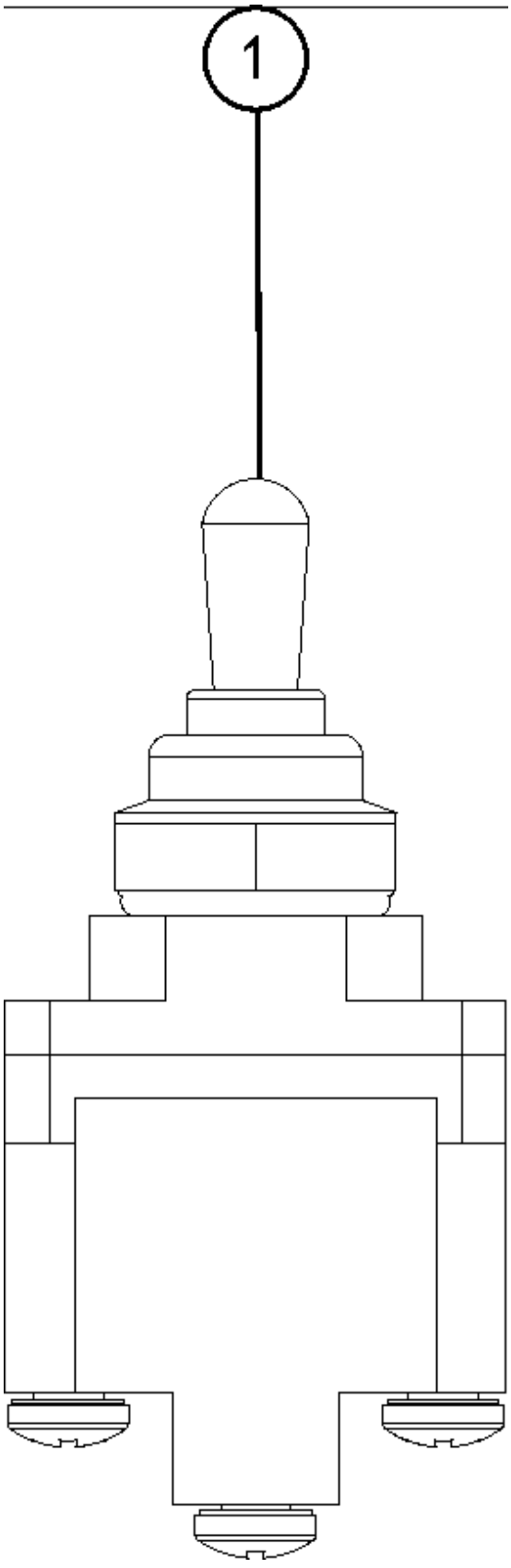

312.103A Harness, Switch, JIB, PCON

Item	*Part No.*	*Description*	*Qty.*
-	1258951GT	HARNESS, SWITCH, JIB, PCON	1
1	128200GT	SWITCH TOGGLE ASSY SPDT 3P MOM	1

313.101 Harness, Platform Manifold

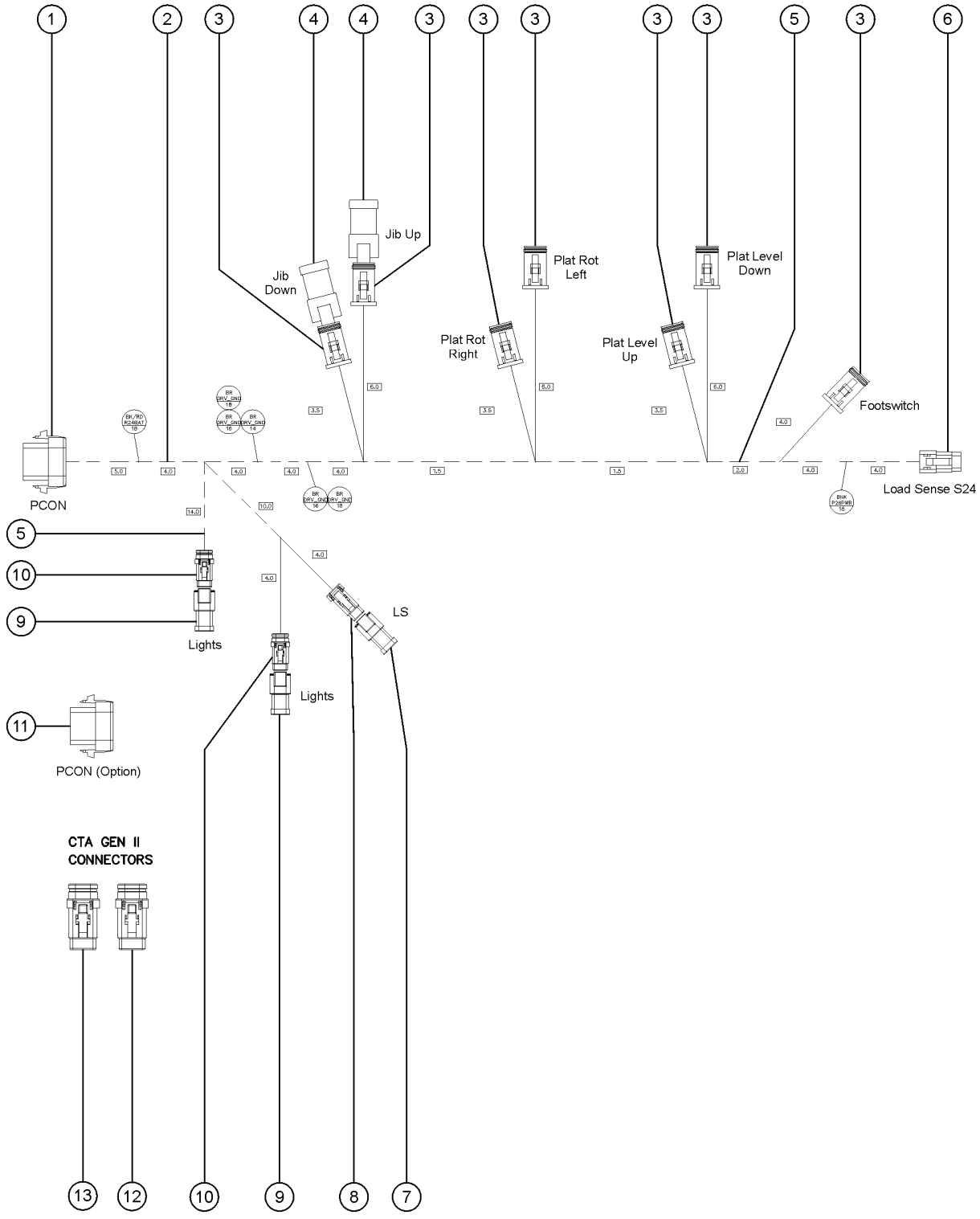

313.101 Harness, Platform Manifold

Item	Part No.	Description	Qty.
-	1274450GT	HARNESS, PLATFORM MANIFOLD	1
1	226389GT	CONN, PLUG, 18 WAY, DEUTSCH, DTV, GRAY	1
1-	226390GT	LOCK,PLUG, 18WAY, DSCH, WV-18S	1
2	75640GT	WIRE LOOM,3/4 DIA.	23 Inches
3	119056GT	CONN, PLUG, 2 WAY, DEUTSCH, DT, ENDCAP	7
3-	60425GT	CONN, PLUG, 2 WAY, DEUTSCH, DT, LOCK	7
4	119065GT	CONN, RECEP, 2 WAY, DEUTSCH, DT	2
5	20973GT	WIRE LOOM,3/8 POLY SLIT	48 Inches
6	99343GT	CONNECTOR,PLUG 6 WAY 18-20 GA	1
6-	99344GT	LOCK,PLUG 6 WAY 18-20GA	1
7	1277906GT	CONN, RECEP, 4 WAY, DTM	1
8	1277904GT	CONN, PLUG, 4 WAY, DEUTSCH, DTM	1
8-	1277905GT	CONN, PLUG, 4 WAY, DEUTSCH, DTM, LOCK	1
9	T112536GT	CONN, RECEP 3 WAY DTM, 16-24 GA	2
10	T110954GT	CONN,PLUG 3 WAY DTM, 16-24GA	2
10-	T110955GT	LOCK,PLUG 3 WAY DTM, 16-24GA	2
11	226947GT	CONN, PLUG, 18 WAY, DEUTSCH, DTV, BLACK	1
11-	226390GT	LOCK,PLUG, 18WAY, DSCH, WV-18S	1
12	1253250GT	CONN, PLUG, 2 WAY, DEUTSCH, DTM	2
13	1268161GT	CONN, PLUG, 2 WAY, DEUTSCH, DTM, LOCK	2

401.1 Deutz TD2011L04i Engine - View 1

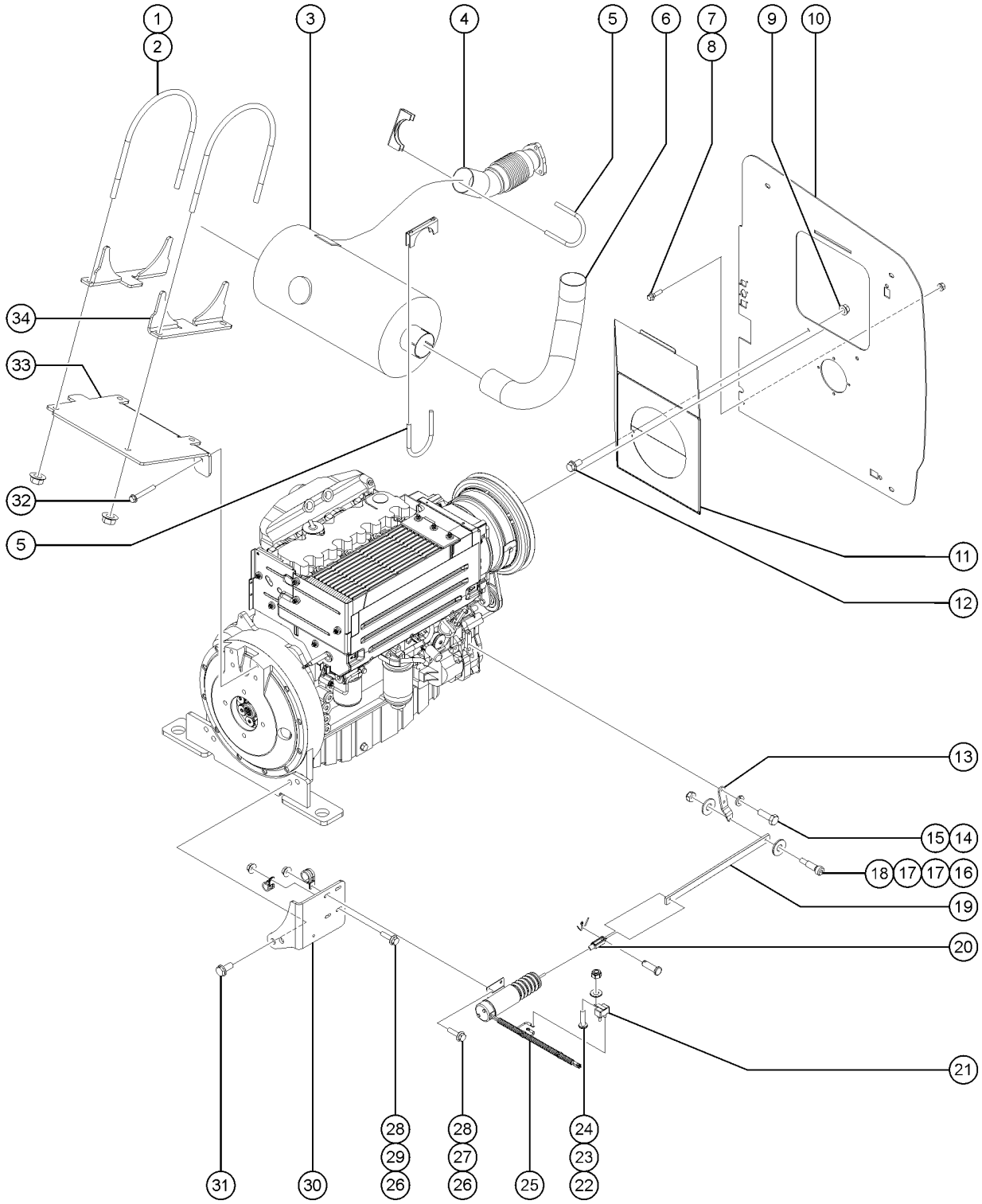

401.1 Deutz TD2011L04i Engine - View 1

Item	Part No.	Description	Qty.
1	70449GT	U-BOLT,1/2-13 X 8.5	2
2	121423GT	NUT,FLG,1/2-13	4
3	70444GT	MUFFLER,2.5"INLET/OUTLET	1
4	70445GT	FLEX PIPE,EXHAUST,2.5" DIA	1
5	71911GT	CLAMP,MUFFLER, 2.50 INCH	2
6	70465GT	TAILPIPE,DEUTZ BF4L2011	1
7	824079GT	SCREW,HHF,1/4-20X1,8,ZAG	3
8	1274165GT	NUT,NYLOCK,1/4-20,C,ZAG	1
9	121422GT	NUT,HEX,FLG,3/8-16	2
10	1274053GT	PLATE, BULKHEAD, DEUTZ TD2011	1
11	121410GT	WELDMENT,COOLING AIRBOX	1
12	75051GT	SCREW,SER FLNG3/8UNCX3/4ZNYEL	2
13	50787-SGT	LEVER, GOVERNOR ACTUATOR	1
14	22578GT	SCREW,HHC,M6 X 20MM,GR8.8	2
15	1256457GT	WASHER,LOCK, M6,ZAB	2
16	6584GT	SCREW,SHS,10-24 X .625	1
17	6638GT	WASHER, FLAT, USS, 1/4"Y	2
18	5365GT	NUT,NYLOCK,10-24	1
19	139322GT	THROTTLE LINKAGE, DSL	1
20	21130GT	CLEVIS YOKE-1/4-28,PLTD W/PIN	1
21	128829GT	CIRCUIT BRKR 15A TYPE 2 METAL	1
22	49816GT	SCREW,PHILLIPS,PHM,10-32 X .75	1
23	6146GT	WASHER,FLAT,MS,#10,Y	1
24	6178GT	NUT, NYLOCK, 10-32	1
25	121615GT	THROTTLE SOLENOID ASSY, TROMB.	1
25-	128829GT	CIRCUIT BRKR 15A TYPE 2 METAL	
26	121420GT	SCREW,HHF,1/4-20 X 1.00	4
27	18666GT	CLAMP,1.00,#16 X 1/4,RUB CUSH	1

401.1 Deutz TD2011L04i Engine - View 1

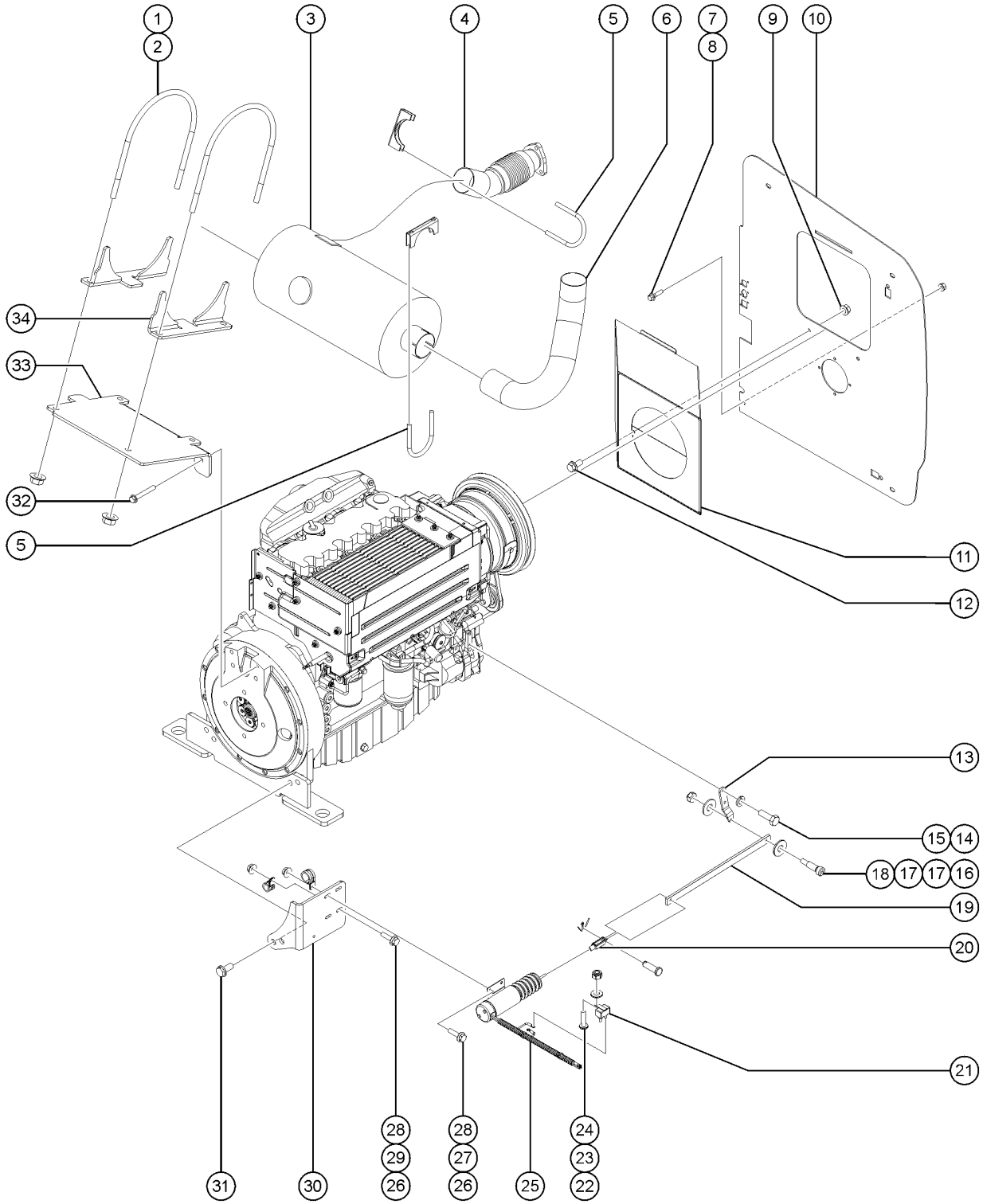

401.1 Deutz TD2011L04i Engine - View 1

Item	Part No.	Description	Qty.
28	121421GT	NUT,FLG,1/4-20	4
29	45454GT	CLAMP,0.75,#12 X 3/8,RUB CUSH*	1
30	139321GT	FORMING, SOLENOID MOUNT***	1
31	121688GT	SCREW,HHC,FLG,M14 X 35	2
32	121430GT	SCREW,FLG HD,M10 X 70 GR12.9	2
33	70448PGT	FORMING,MUFFLER MOUNT	1
34	70483GT	FORMING,8.5' MUFFLER MOUNT	2

402.1 Deutz TD2011L04i Engine - View 2

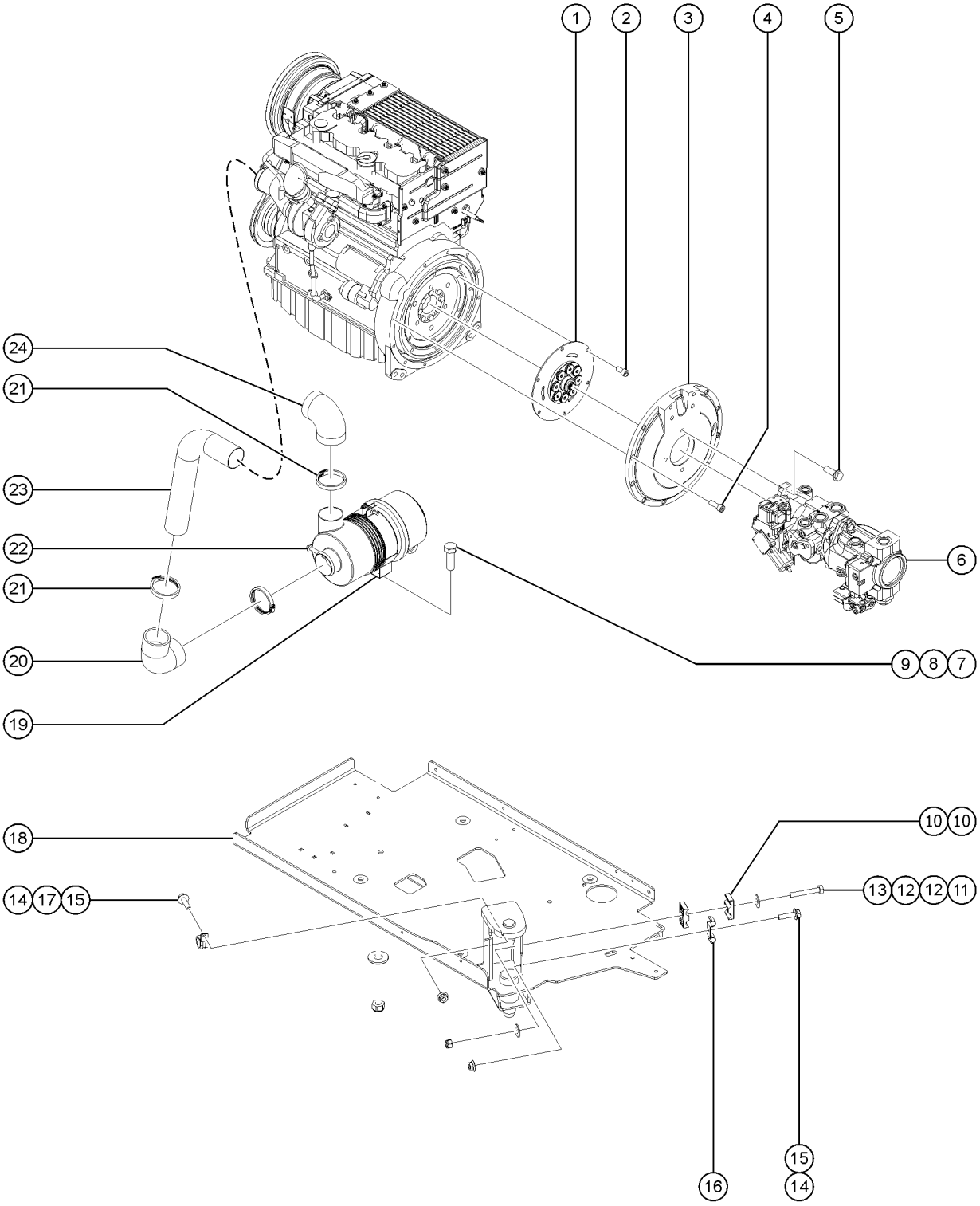

402.1 Deutz TD2011L04i Engine - View 2

Item	Part No.	Description	Qty.
1	128004GT	COUPLER,15 TOOTH,FBA,SAE8***	1
2	62476GT	SCREW,SHC,M10X1.5X20MM (75090)	6
3	70381GT	COVER,FLYWHEEL CASTING	1
4	61110GT	SCREW,SHC,M10X1.5X30 GR 12.9 to SN S85XCH-4319	9
4B	1255666GT	SCREW,SHC,M10-1.5X30,DIN912,12.9,ZAB from SN S85XCH-4320	9
5	123167GT	FLGHCS,1/2-13X1.50,GR8,BLK PH	4
6		REF. DRIVE PUMP AND FUNCTION PUMP (refer to 708.1)	1
7	13002GT	SCREW,HHC,5/16-18 X 1 GR5	2
8	5397GT	WASHER, FLAT, USS, 5/16-18	2
9	6782GT	NUT, NYLOCK, 5/16-18	2
10	78736GT	CLAMP,2 HOSE,PLASTIC	2
11	6637GT	SCREW,HHC,1/4-20 X 1.75	1
12	6638GT	WASHER, FLAT, USS, 1/4"Y	2
13	6091GT	NUT,NYLOCK,1/4-20	1
14	121420GT	SCREW,HHF,1/4-20 X 1.00	2
15	121421GT	NUT,FLG,1/4-20	2
16	75289GT	CLAMP,HOSE,1/2" DOUBLE	1
17	18666GT	CLAMP,1.00,#16 X 1/4,RUB CUSH	1
18		REF. WELDMENT,ENGINE TRAY (refer to 417.1)	1
19	81468GT	MOUNTING BAND,AIR CLEANER	1
20	139455GT	ELBOW,AIR INTAKE,RUBBER	1
21	30489GT	CLAMP,HOSE,3.50	3
22	81467GT	AIR CLEANER,NELSON	1
22-	75450GT	AIR CLEANER CLIPS, SUPERBOOM	
22-	75451GT	AIR CLEANER COVER, SUPERBOOM*	
22-	52866GT	EVACUATOR VALVE-AIR CLEANER	
22-	62425GT	FILTER,AIR CLEANER, SUPERBOOM	
23	121563GT	TUBE,AIR INTAKE,DEUTZ	1

402.1 Deutz TD2011L04i Engine - View 2

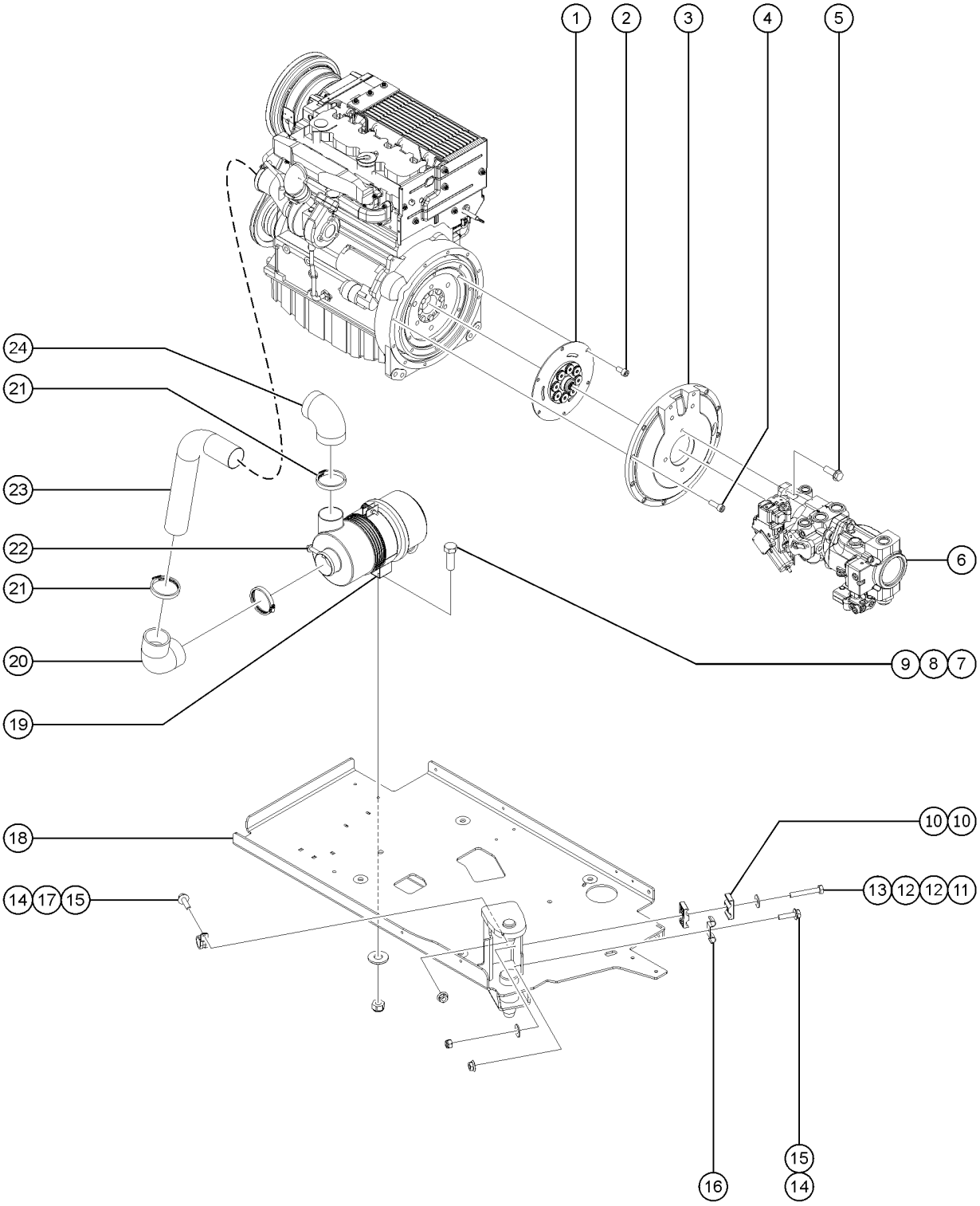

402.1 Deutz TD2011L04i Engine - View 2

Item	Part No.	Description	Qty.
24	60561GT	ELBOW,INLET,CUMMINS	1

403.1 Deutz TD2011L04i Engine - View 3

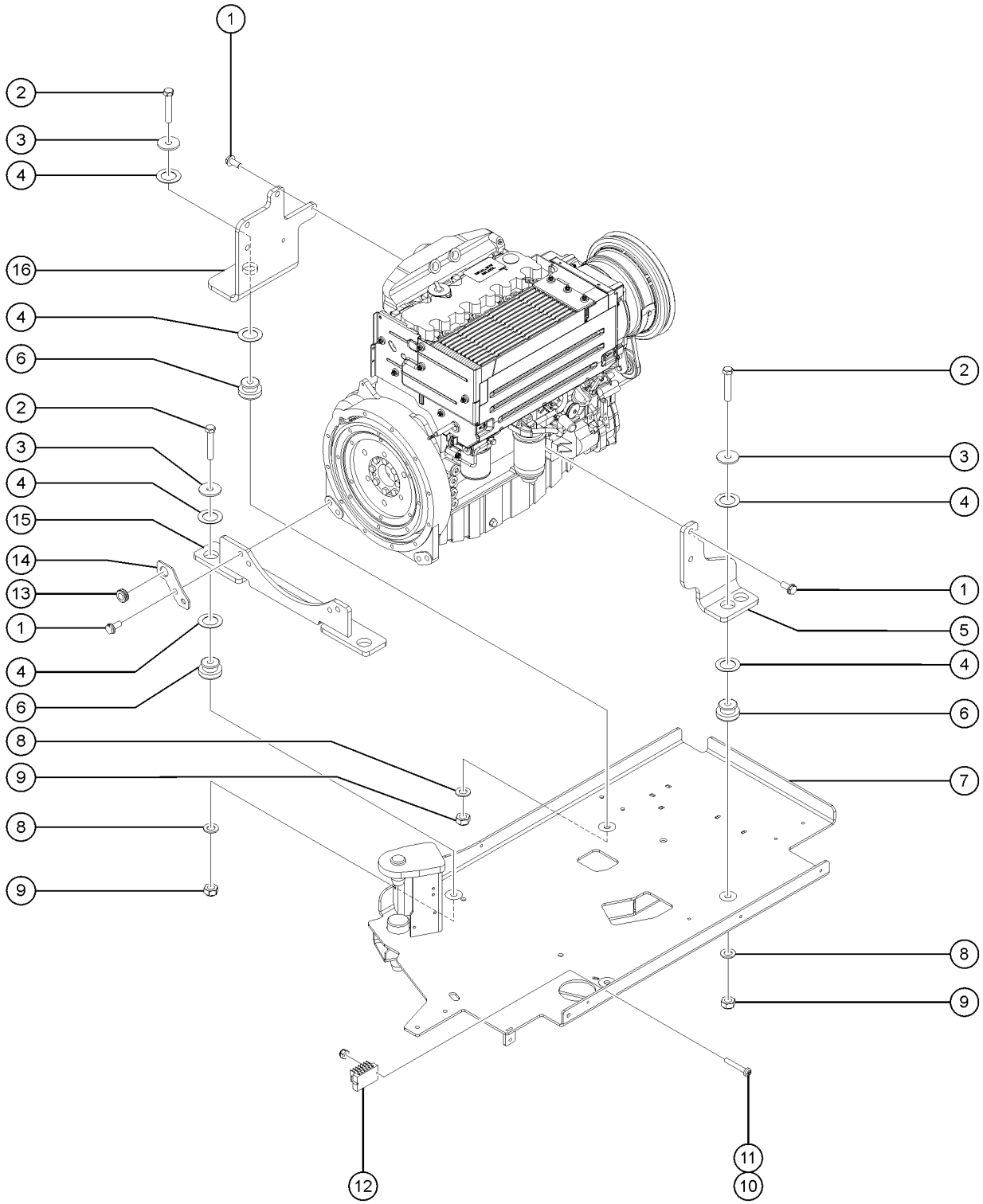

403.1 Deutz TD2011L04i Engine - View 3

Item	Part No.	Description	Qty.
1	121688GT	SCREW,HHC,FLG,M14 X 35	7
2	13003GT	SCREW,HHC,5/8-11 X 3.5 GRD.8	4
3	33418GT	WASHER,FLAT,.625 X 2.25 X.15	4
4	18596GT	WASHER,FLAT,1.56 X 2.5 X .061	8
5	70455GT	FORMING,ENGINE MOUNT	1
6	102045GT	ISOLATOR,ENGINE VIBRATION	4
7		REF. WELDMENT,ENGINE TRAY refer to 417.1	1
8	13064GT	WASHER,FLAT,.625 HARDENED	4
9	6024GT	NUT,NYLOCK,5/8-11	4
10	49817GT	SCREW,PHILLIPS,PHM,10-32 X1.25	2
11	6178GT	NUT, NYLOCK, 10-32	2
12	89997GT	RELAY MODULE(89996,89998)	1
13	60584GT	GROMMET,RUBBER .75 X .19 X 1**	1
14	217203GT	PLATE,BRACKET,BATTERY CABLE	1
15	70456GT	WELDMENT,REAR ENGINE MOUNT	1
16	70454GT	FORMING,ENGINE MOUNT	1

404.1 Deutz TD2011L04i Engine - View 4

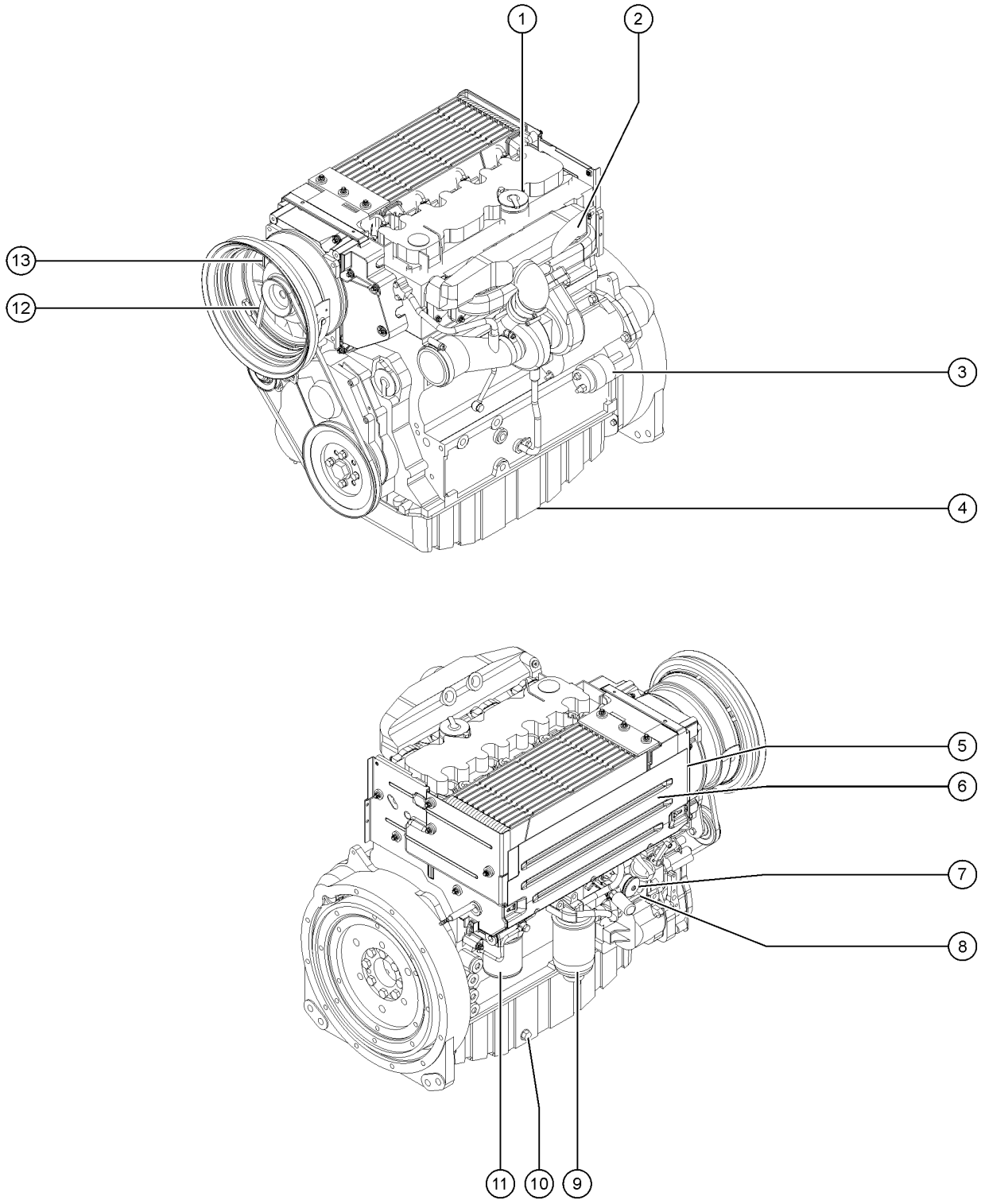

404.1 Deutz TD2011L04i Engine - View 4

Item	Part No.	Description	Qty.
A	27089GT	HOSE,5/16 FUEL,SAE 30R7 (tank to engine input line)	108 inches
B	30490GT	HOSE,1/4 FUEL LINE,SAE 30R7 (tank to engine return line)	101 inches
-	1278259GT	S80/85XC, DEUTZ, TD2011L04i, ROW	1
1	29557GT	CAP,OIL FILLER,DEUTZ,DIESEL***	1
2	102590GT	EXHAUST MANIFOLD, DEUTZ F4L201	1
2-	29559GT	GASKET,EXHAUST	1
3	49915GT	SOLENOID-STARTR DEUTZF4L1011F*	1
4	102586GT	OIL PAN,DEUTZ F4L2011	1
5	1289103GT	COVER,ENGINE,TD2011 L04I	1
6	111445GT	SENDING UNIT,OIL TEMP SWCH,DTZ	1
7	30810GT	SENDING UNIT,OIL PRESSURE***	
7-	106033GT	ADAPTER,NPT 6-4	
7-	106034GT	ADAPTER,M18	
8	52352GT	DIPSTICK-F3L1011F (DEUTZ)	
9	29560GT	FILTER,FUEL/WTR SEP, DTZ 1008 (Genie genuine part. see PN 1254826 for compatible aftermarket replacement)	1
9-	1254826GT	FUEL FILTER W/SEP,DEUTZ,1008 (Genie aftermarket part. filter for Deutz F3L 1011F engine)	1
9-	58566GT	FILTER HEAD (29560)	
10	102587GT	PLUG,ENGINE OIL,DEUTZ F4L2011	
11	49924GT	FILTER,OIL,DEUTZ (Genie genuine part. See PN 1255653 for compatible aftermarket replacement)	
11-	1255653GT	FILTER,OIL,DEUTZ,REPLACEMENT (Genie aftermarket part. compatible with Genie Genuine Part 49924)	
12	58630GT	V-BELT, DEUTZ TD2011LOAI	
13	58249GT	ALTERNATOR, DEUTZ,BF4L2011***	

405.1 Deutz TD 2.9L4 Engine - View 1

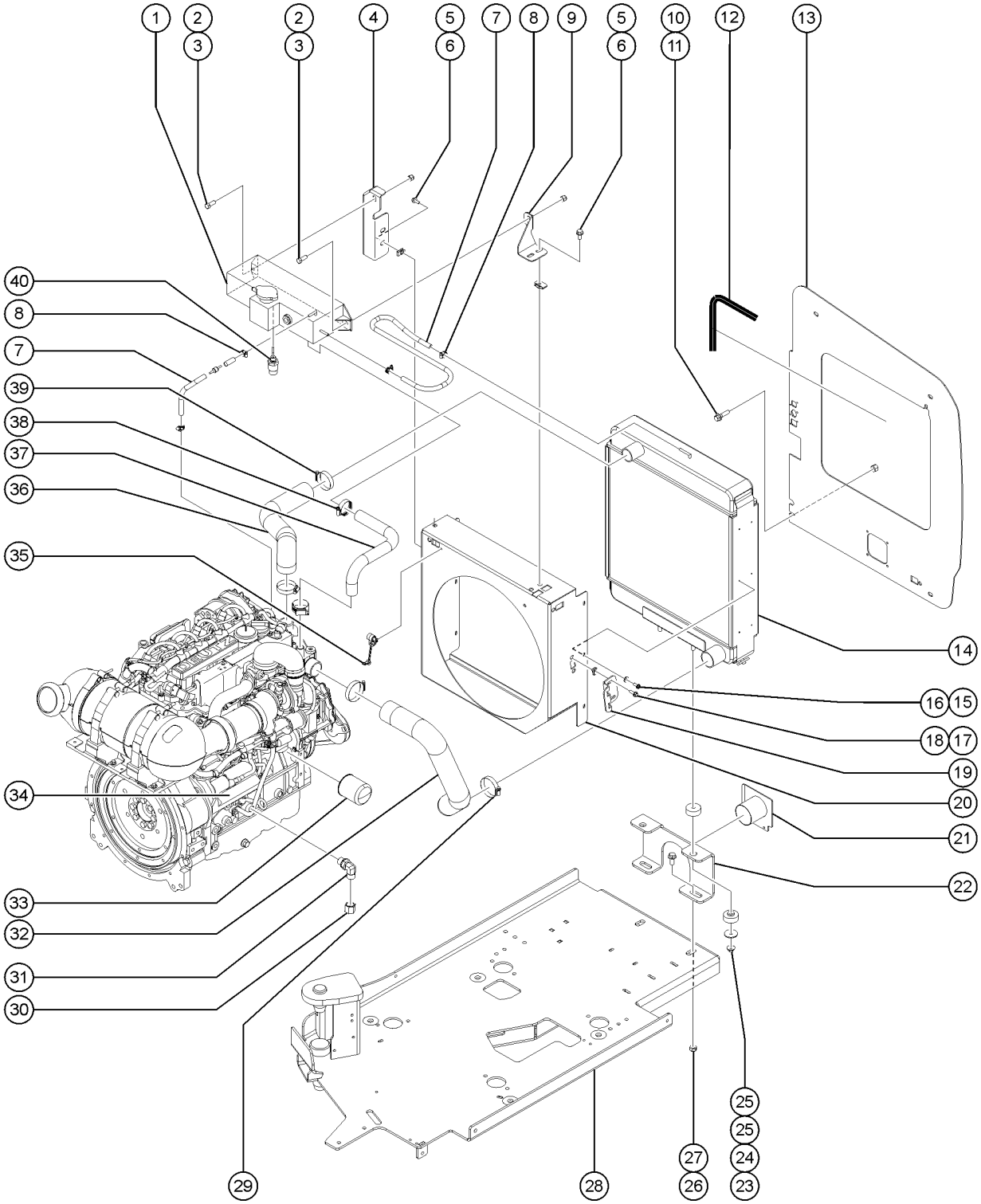

405.1 Deutz TD 2.9L4 Engine - View 1

Item	Part No.	Description	Qty.
-		Due to Tier 4 regulations, many engine replacement parts require engine serial number at time of order placement. When ordering engine parts please have both machine and engine serial numbers available. For internal engine parts, contact engine dealer	
-		Ref. Wire Harness Assembly (DEUTZ OXIDATION CATALYST/MUFFLER)(contact Genie Parts; engine serial number required)	
1	161938GT	EXPANSION TANK,METAL,D2.9	1
1B	31983GT	CLAMP,HOSE,1 EAR, 9/16 for 82206	
1B	1274900GT	SIGHT GLASS for 161938	
1B	1254823GT	CAP,RADIATOR,PERKINS (94232) for 161938	
1B	822606GT	TUBING,VINYL,3/8" CLEAR for 161938	46 inches
2	824090GT	SCREW,HHF,3/8-16X1,8,ZAG	2
3	1274322GT	NUT,NYLOCK FLG,3/8-16,F,ZAG	2
4	826825GT	BRACKET,EXPANSION TANK, LEFT M	1
5	824089GT	SCREW, HHF, 3/8-16 X .75, 8, ZAG	4
6	29868GT	SPRING CLIP,3/8-16,.05-.20X.73,ZAG	4
7	1283995GT	HEATER HOSE,1/4"	8 inches
7-	1283995GT	HEATER HOSE,1/4"	4 inches
7-	1282119GT	2MM ORIFICE UNION, 1/4" HOSE	
8	21465GT	CLAMP,HOSE, .25" TO .63" X .3125"	4
9	825218GT	BRACKET,EXPANSION TANK,DEUTZ 2	1
10	824079GT	SCREW,HHF,1/4-20X1,8,ZAG	1
11	1274165GT	NUT,NYLOCK,1/4-20,C,ZAG	1
12	119218GT	TRIM,EDGE,1/8X3/4 SIDE BULB	1
13		Ref. PLATE, BULKHEAD (refer to 417.1)	1
14	826795GT	RADIATOR,6-CORE,19.375W X 18.1	1
15	824220GT	SCREW,PHPM SEMS ET,10-24X.5,ZA	6
16	1253185GT	WASHER,FLAT,#10,USS,ZAG	6
17	824078GT	SCREW,HHF,1/4-20X.75,8,ZAG	2

405.1 Deutz TD 2.9L4 Engine - View 1

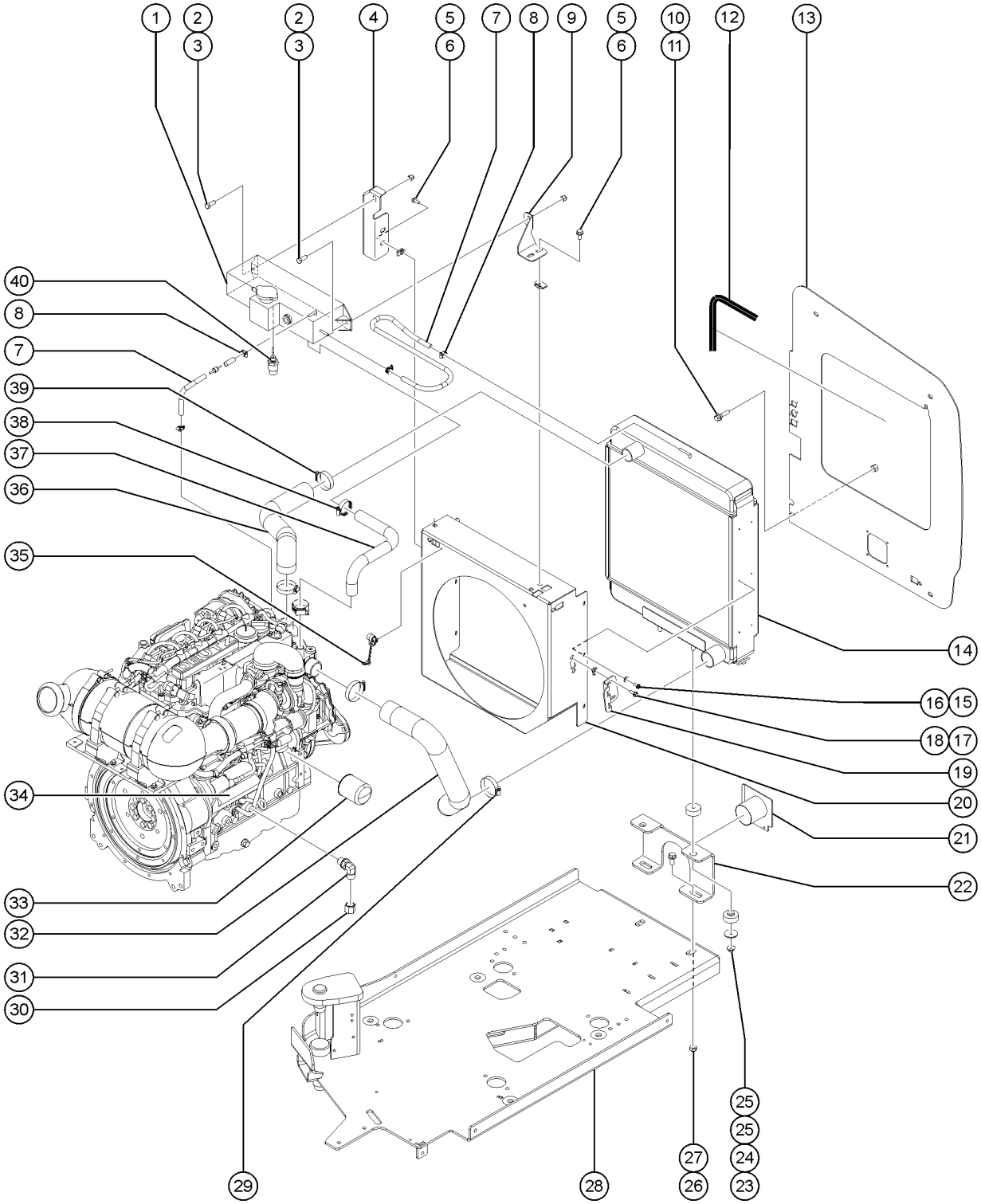

405.1 Deutz TD 2.9L4 Engine - View 1

Item	Part No.	Description	Qty.
18	56912GT	SPRING CLIP,1/4-20,.025-.15X.54,ZAG	2
19	823751GT	BRACKET,INTAKE PIPE,MOUNT,DEUT	1
20	826859GT	SHROUD,17" FAN,6-CORE RADIATOR	1
21	1251928GT	WLDT, INTAKE, T4 DEUTZ, Z80/S80	1
22	826835GT	FORMING,6-CORE RADIATOR MOUNT	1
23	1257628GT	NUT,SERRATED,3/8-16,ZAG	2
24	824120GT	WASHER, FLAT, .375 X 1.50 X .125, ZAG	2
25	24038GT	SHOCK MOUNT,SMALL	4
26	1253319GT	NUT,TL FLG,5/8-11,G,ZAG	2
27	1253208GT	SCREW,HHF,5/8-11X1.5,8,ZAG	2
28		REF. WELDMENT,ENGINE TRAY (refer to 417.1)	
29	35434GT	CLAMP,HOSE,2.00***	2
30	69775GT	CAP, 520112-8 from SN S85XCH-3129	1
31	54428GT	FITTING, HYDRUALIC, 90DEG, O-RING from SN S85XCH-3129	1
32	162284GT	HOSE,LOWER RADIATOR, 2.9L DEUT	1
33	49924GT	FILTER,OIL,DEUTZ	1
33B	1255653GT	FILTER,OIL,DEUTZ,REPLACEMENT	1
34	1254594GT	STARTER,3.2KW,DEUTZ D2.9	1
35	219508GT	CLAMP, FIXED DIA, NYLON, 3/8"	1
36	162283GT	HOSE, UPPER RADIATOR, DEUTZ D	1
37	823229GT	HOSE,EXPANSION TANK,COMPENSATION	1
38	36208GT	CLAMP,HOSE,1.25***	2
39	22672GT	CLAMP,HOSE,1.75	2
40	218715GT	COOLNT LEVL SENSR, DEUTZTCD3.6	1
40-	826152GT	WASHER, CRUSH, COOLANT SENSOR	

406.1 Deutz TD 2.9L4 Engine - View 2

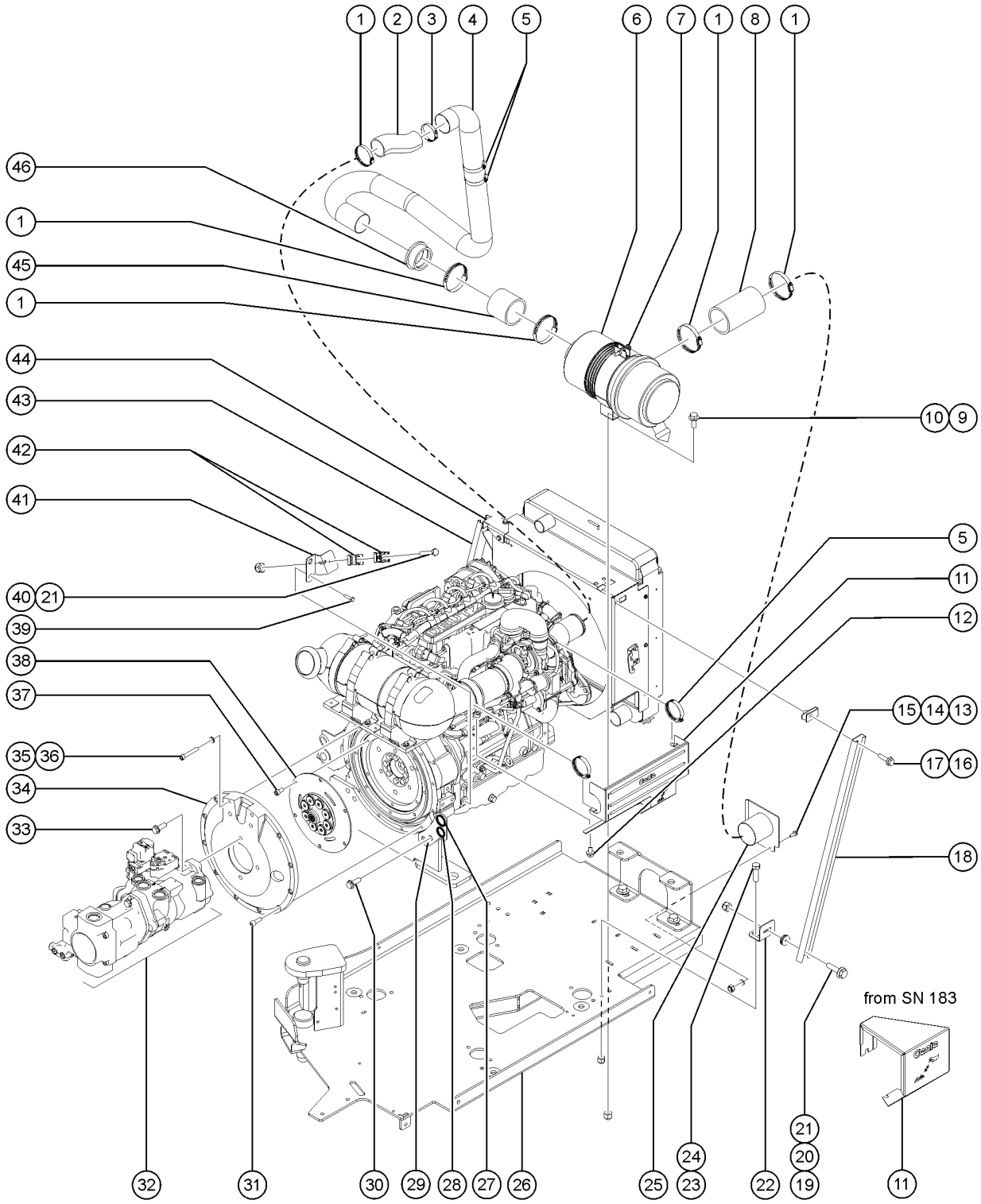

406.1 Deutz TD 2.9L4 Engine - View 2

Item	Part No.	Description	Qty.
-		Due to Tier 4 regulations, many engine replacement parts require engine serial number at time of order placement. When ordering engine parts please have both machine and engine serial numbers available. For internal engine parts, contact engine dealer	
A	237730GT	ENGINE KIT, DEUTZ TD 2.9 to SN S85XCH-4377	1
B	1323444GT	ENGINE KIT, EMR5, DEUTZ TD2.9 from SN S85XCH-4378	1
1	30489GT	CLAMP,HOSE,3.50 to SN S85XCH-5089	5
1B	30971GT	CLAMP,HOSE,3.00" from SN S85XCH-5090	4
2	823703GT	HOSE,REDUCER,OFFSET,TURBO INLE	1
3	30971GT	CLAMP,HOSE,3.00"	1
4	823239GT	TUBE,INTAKE,DEUTZ 2.9L	1
5	45435GT	CLAMP,HOSE,2.50" to SN S85XCH-5089	2
5B	45435GT	CLAMP,HOSE,2.50" from SN S85XCH-5090	3
6	81467GT	AIR CLEANER,NELSON	1
7	81468GT	MOUNTING BAND,AIR CLEANER	1
8	106211-600GT	HOSE,RUBBER 3"ID X .25 BLACK X 6.00 LG	1
9	824086GT	SCREW, HHF, 5/16-18 X 1, 8, ZAG	2
10	1274167GT	NUT,NYLOCK FLG,5/16-18,F,ZAG	2
11	1254717GT	HEAT SHIELD,DEUTZ TD2.9L	1
11B	1254949GT	HEAT SHIELD,DEUTZ TD2.9L	
12	1251983GT	SCREW,HHF,M8-1.25X16,DIN6921,10.9,ZAB	4
12B	1251983GT	SCREW,HHF,M8-1.25X16,DIN6921,10.9,ZAB	2
12B-	824131GT	SCREW,HHF,M6-1.0X16,DIN6921,10.9,ZAB	1
13	121420GT	SCREW,HHF,1/4-20 X 1.00	
14	6638GT	WASHER, FLAT, USS, 1/4"Y	
15	6091GT	NUT,NYLOCK,1/4-20	
16	824078GT	SCREW,HHF,1/4-20X.75,8,ZAG	5
17	56912GT	SPRING CLIP,1/4-20,.025-.15X.54,ZAG	5
18	823144GT	UNISTRUT,FAN SHROUD BRACE,R,DE	1
19	824079GT	SCREW,HHF,1/4-20X1,8,ZAG	2

406.1 Deutz TD 2.9L4 Engine - View 2

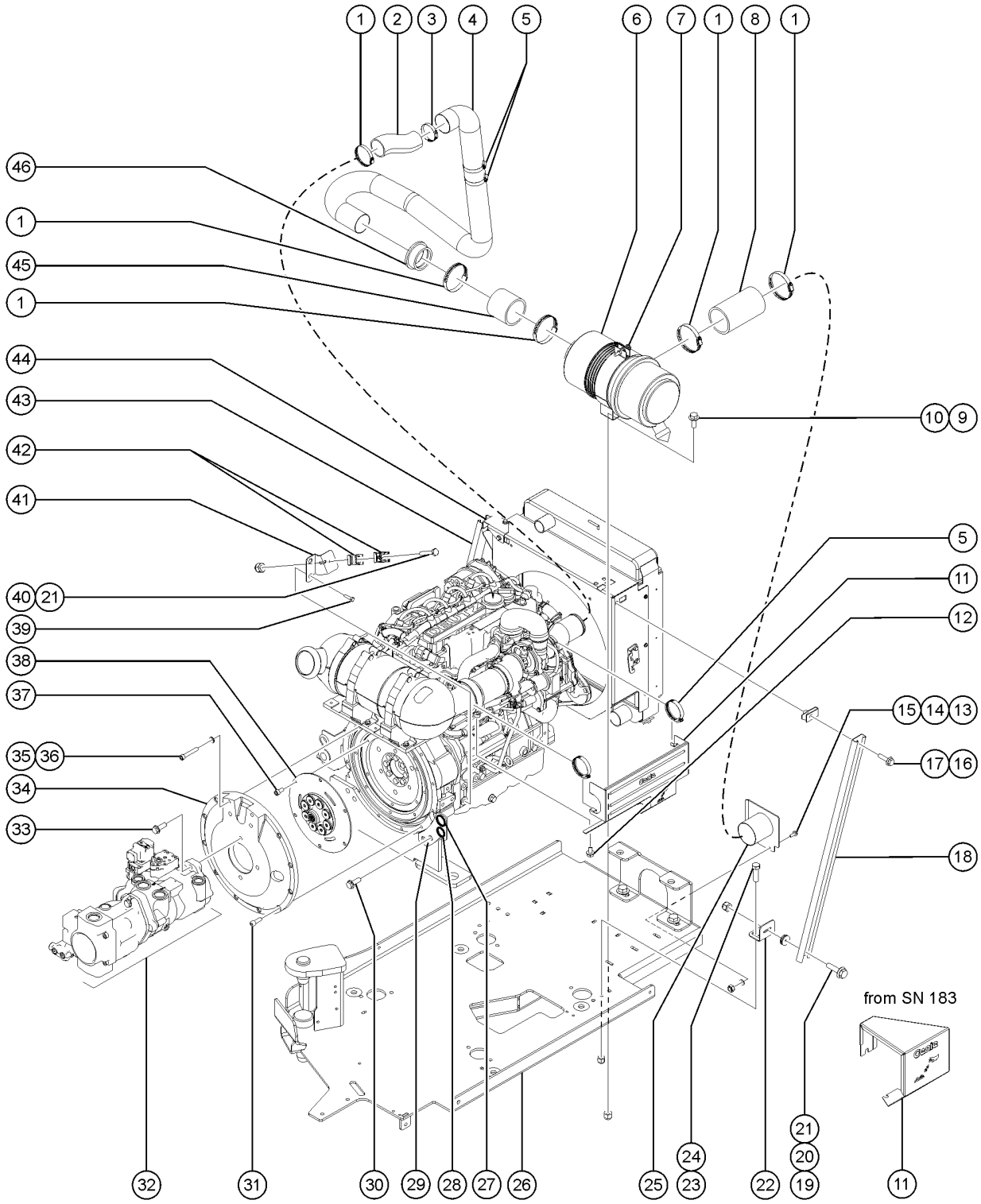

406.1 Deutz TD 2.9L4 Engine - View 2

Item	Part No.	Description	Qty.
20	229986GT	GROMMET RUBBER .375X1.00X.1875	2
21	1277924GT	NUT,NYLOCK FLG,1/4-20,F,ZAG	3
22	823147GT	FORMING,FAN SHROUD STRUT MOUNT	2
23	824091GT	SCREW, HHF, 3/8-16 X 1.25, 8, ZAG	4
24	1274322GT	NUT,NYLOCK FLG,3/8-16,F,ZAG	4
25		REF. WLDT, INTAKE, T4 DEUTZ, Z80/S8 (refer to 405.1)	
26		REF. WELDMENT,ENGINE TRAY,2.9L DEUTZ (refer to 417.1)	
27	124962GT	GROMMET,RUBBER,1.0 X 1.25X1.5	1
28	60584GT	GROMMET,RUBBER .75 X .19 X 1**	1
29	1286137GT	PLATE,BATTERY CABLE SUPPORT	1
30	1251899GT	SCREW,HHF,M14-2.0 X 40,DIN 6921,10.9, ZAB	4
31	1255666GT	SCREW,SHC,M10-1.5X30,DIN912,12.9,ZAB	10
32		REF.DRIVE PUMP AND FUNCTION PUMP (refer to 708.1)	
33	123167GT	FLGHCS,1/2-13X1.50,GR8,BLK PH	4
34	70381GT	COVER,FLYWHEEL CASTING	1
35	1257481GT	SCREW,SHC,M10-1.5X60,DIN912,12.9,ZAB	2
36	824145GT	WASHER, FLAT, DIN125, M10, ZAB	2
37	1255665GT	SCREW,SHC,M10-1.50X20,DIN912,12.9,ZAB	6
38	128004GT	COUPLER,15 TOOTH,FBA,SAE8***	1
39	1255806GT	SCREW,HHF,M12-1.75X20,DIN6921,10.9,ZAB	2
40	824082GT	SCREW, HHF, 1/4-20 X 1.75, 8, ZAG	1
41	825939GT	FORMING, CLAMP, BATTERY CABLE	1
42	78736GT	CLAMP,2 HOSE,PLASTIC	2
43	823143GT	UNISTRUT,FAN SHROUD BRACE,L,DE	1
44	1252687GT	BRACKET, STRUT BRACE	1
45	106211-300GT	HOSE,RUBBER 3"ID X .25 BLACK	1
46	101640GT	REDUCER,RUBBER 3.0 - 2.5	1

407.1 Deutz TD 2.9L4 Engine - View 3

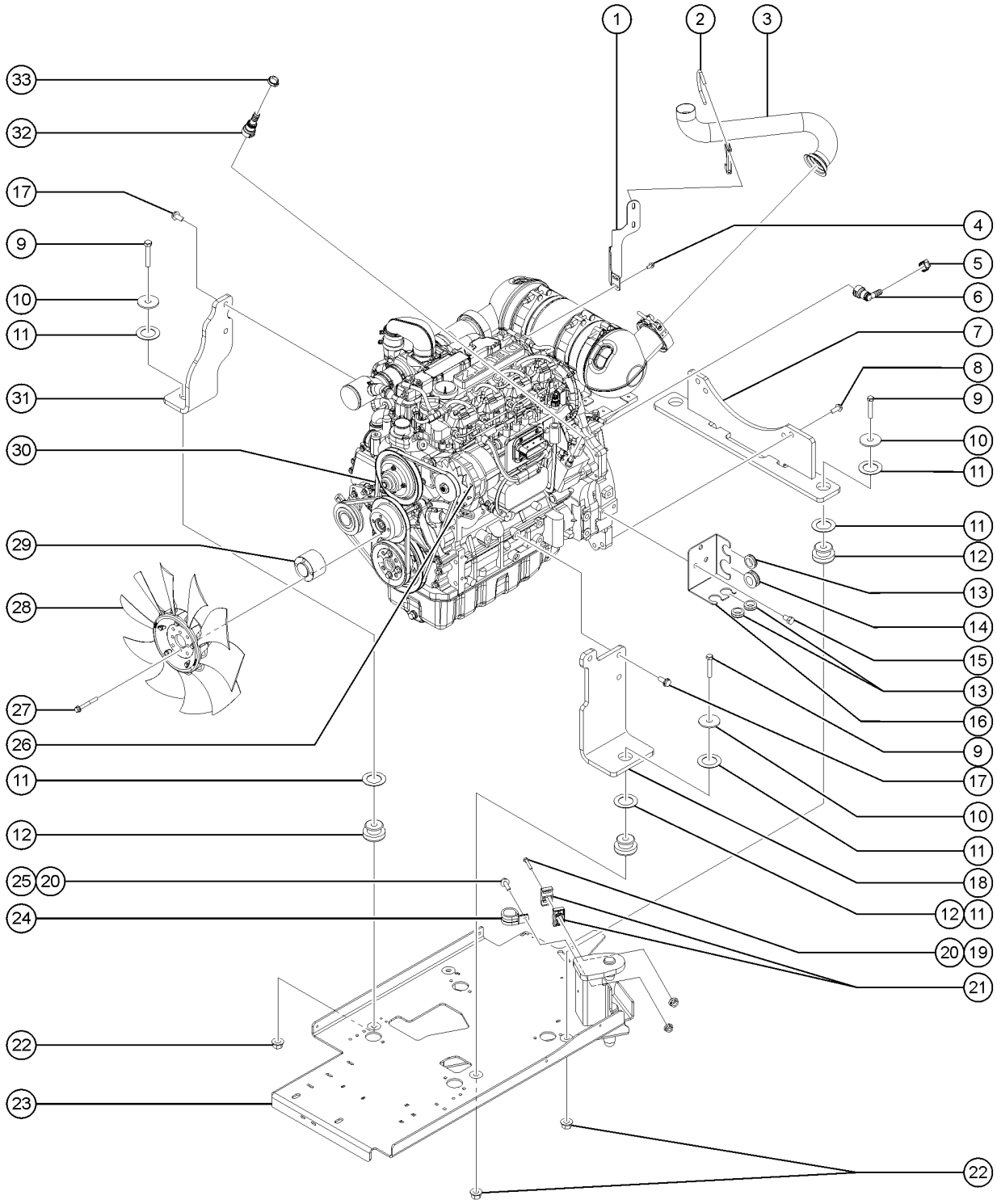

407.1 Deutz TD 2.9L4 Engine - View 3

Item	Part No.	Description	Qty.
-		Due to Tier 4 regulations, many engine replacement parts require engine serial number at time of order placement. When ordering engine parts please have both machine and engine serial numbers available. For internal engine parts, contact engine dealer	
1	1268921GT	FORMING,TAILPIPE SUPPORT,S80	1
2	71911GT	CLAMP,MUFFLER, 2.50 INCH	1
3	162276GT	EXHAUST PIPE, 2.9L DEUTZ	1
3-	825015GT	CLAMP, T4 TCD3.6 DOC	1
4	824132GT	SCREW,HHF,M8-1.25X20,DIN6921,10.9,ZAB	2
5	81154GT	CLAMP,HOSE,SIZE .31 > .91	1
6	826000GT	CONNECTOR, SAE10, QUICK CONNECT	1
7	823135GT	WELDMENT, REAR MOUNT,ENGINE	1
8	1251899GT	SCREW,HHF,M14-2.0 X 40,DIN 6921,10.9, ZAB	4
9	1256169GT	SCREW,HHC,5/8-11X3.5,8,ZAG	4
10	824123GT	WASHER,FLAT,.625X2.25X.188,ZAG	4
11	1251565GT	WASHER,SHIM,1.56X2.5X.061,ZAG	8
12	102045GT	ISOLATOR,ENGINE VIBRATION	4
13	124962GT	GROMMET,RUBBER,1.0 X 1.25X1.5	3
14	106923GT	GROMMET,RUBBER .38X1.38X1.0	1
15	1255806GT	SCREW,HHF,M12-1.75X20,DIN6921,10.9,ZAB	3
16	826873GT	FORMING, ENGINE HARNESS SUPPORT	1
17	1256776GT	SCREW,HHF,M14-2.0X35,DIN6921,10.9,ZAB	5
18	823012GT	MOUNT,ENGINE,LEFT SIDE	1
19	824082GT	SCREW, HHF, 1/4-20 X 1.75, 8, ZAG	1
20	1277924GT	NUT,NYLOCK FLG,1/4-20,F,ZAG	2
21	78736GT	CLAMP,2 HOSE,PLASTIC	2
22	1253319GT	NUT,TL FLG,5/8-11,G,ZAG	4
23		REF. WELDMENT,ENGINE TRAY,2.9L DEUTZ (refer to 417.1)	
24	18666GT	CLAMP,1.00,#16 X 1/4,RUB CUSH	1
25	824079GT	SCREW,HHF,1/4-20X1,8,ZAG	1

407.1 Deutz TD 2.9L4 Engine - View 3

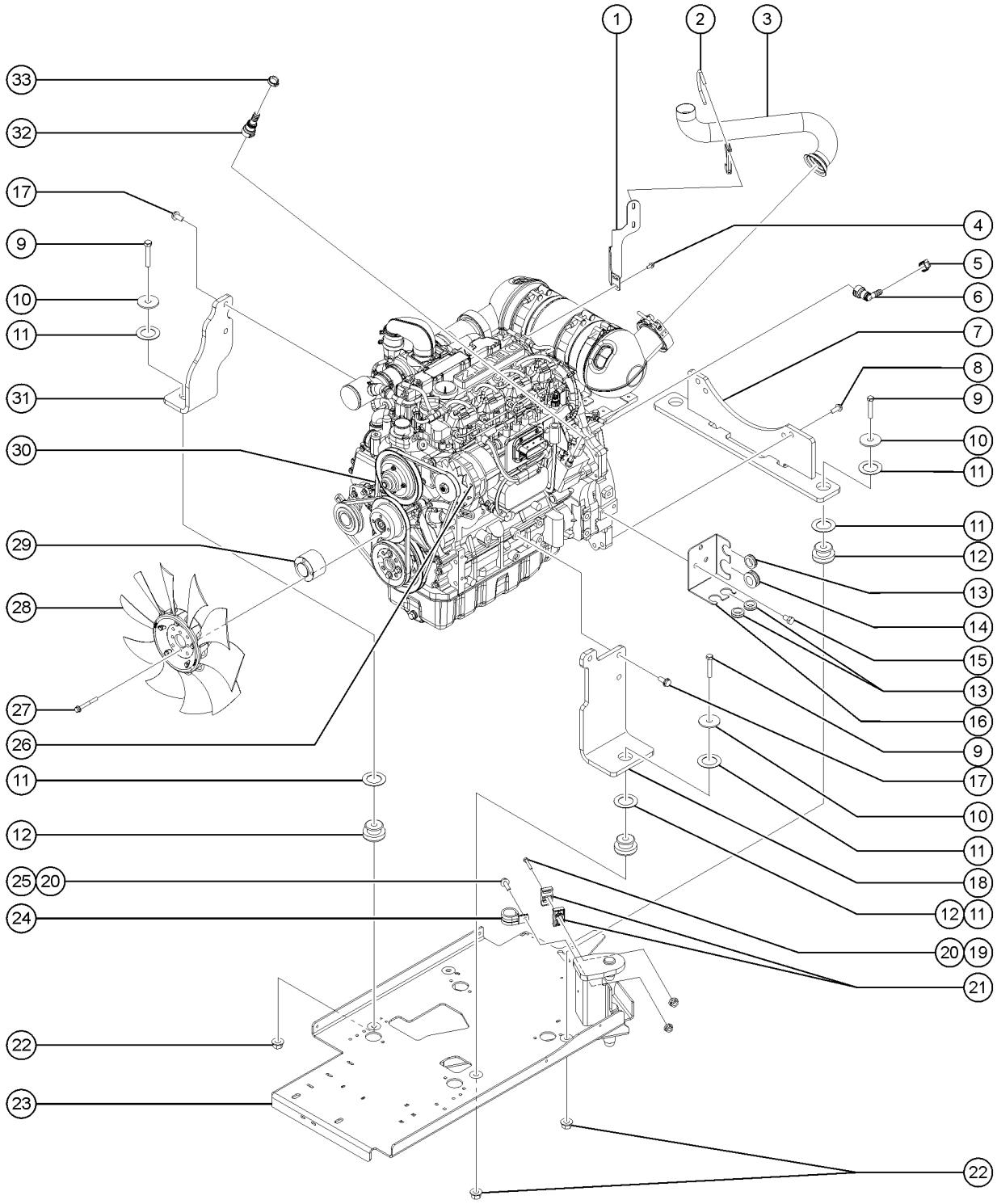

407.1 Deutz TD 2.9L4 Engine - View 3

Item	Part No.	Description	Qty.
26	236251GT	ALTERNATOR,95 AMP,DEUTZ TCD3.6	1
27	1258771GT	SCREW,HHF,M8-1.25X60,DIN6921,10.9,ZAB	4
28	1251496GT	FAN,10 BLADE,17",DEUTZ 2.9L	1
29	1258641GT	SPACER, FAN, DEUTZ, 43MM LNG	1
30	1262866GT	FAN BELT, ALTERANTOR	1
31	823013GT	MOUNT,ENGINE,RIGHT SIDE	1
32	1255651GT	CONNECTOR,SAE12,QUICK CONNECT	1
33	822087GT	CLAMP,HOSE,1EAR,25/32	1

408.1 Deutz TD 2.9L4 Engine - View 4

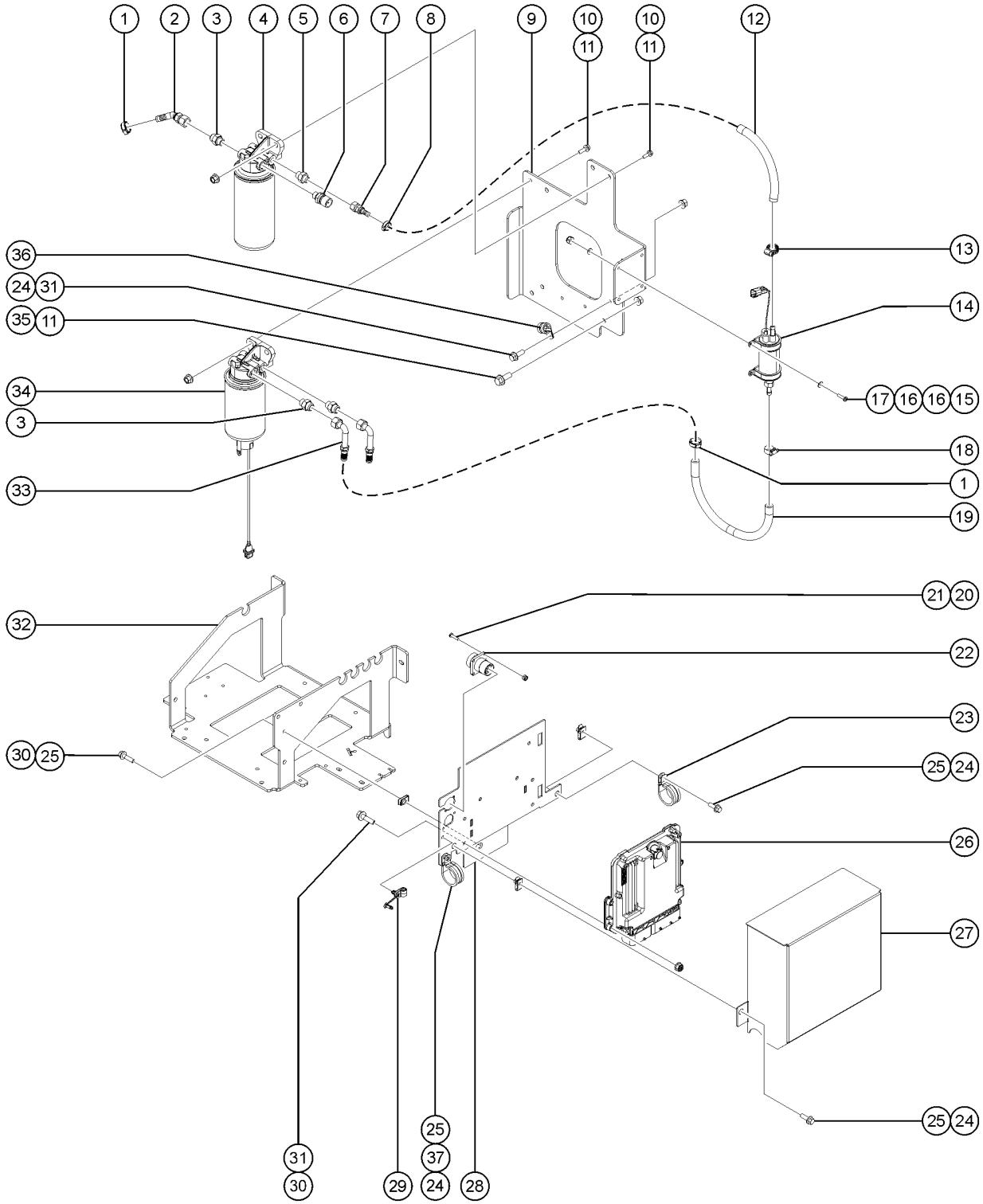

408.1 Deutz TD 2.9L4 Engine - View 4

Item	Part No.	Description	Qty.
A-		Due to Tier 4 regulations, many engine replacement parts require engine serial number at time of order placement. When ordering engine parts please have both machine and engine serial numbers available. For internal engine parts, contact engine dealer	
1	822087GT	CLAMP,HOSE,1EAR,25/32	3
2	826357GT	FITTING,45DEG,1/2 HS X 3/4-16,JIC,SW,FEMALE,STEEL	1
3	162209GT	FITTING,CONN,16MM-8MJ	3
4	1261236GT	ASSY,FUEL FILTER,DEUTZ 2.9	1
4-	214228GT	FILTER, DEUTZ 2.9, FUEL	1
5	162208GT	FITTING,CONN,16MM-6MJ	1
6	824673GT	SENSOR,LOW PRESSURE,DEUTZ 2.9L	1
7	824351GT	FITTING,STR,3/8 HS X 9/16-18,JIC,SW,FEMALE	1
8	96770GT	CLAMP, HOSE, 1 EAR, 11/16	1
9	1267313GT	BRACKET,FUEL SYSTEM,DEUTZ 2.9L	1
10	824091GT	SCREW, HHF, 3/8-16 X 1.25, 8, ZAG	4
11	1274322GT	NUT,NYLOCK FLG,3/8-16,F,ZAG	7
12	823420-1772GT	HOSE,FUEL,3/8,GATES RLA 60"	1
13	81154GT	CLAMP,HOSE,SIZE .31 > .91	1
14	236259GT	LIFT PUMP,FUEL,DEUTZ TCD3.6	1
15	824215GT	SCREW, PHPM, 10-32 X .75, ZAG	4
16	1253185GT	WASHER,FLAT,#10,USS,ZAG	8
17	6178GT	NUT, NYLOCK, 10-32	4
18	46131GT	CLAMP,HOSE,.63" - 1.0" X .5"	1
19	823421GT	HOSE,FUEL,1/2,GATES RLA	1
20	1253477GT	SCREW,PHPM,4-40X.5,ZAG	2
21	40766GT	NUT,NYLOCK,4-40	2
22	1269699GT	HARNESS,ENGINE, DEUTZ2.9T	1
23	54932GT	CLAMP,1.25,#20 X 1/4,RUB CUSH	2
23B	21618GT	CLAMP,1.13,#18 X 1/4,RUB CUSH to SN S85XCH-3893	2
23C	21618GT	CLAMP,1.13,#18 X 1/4,RUB CUSH from SN S85XCH-3894	1

408.1 Deutz TD 2.9L4 Engine - View 4

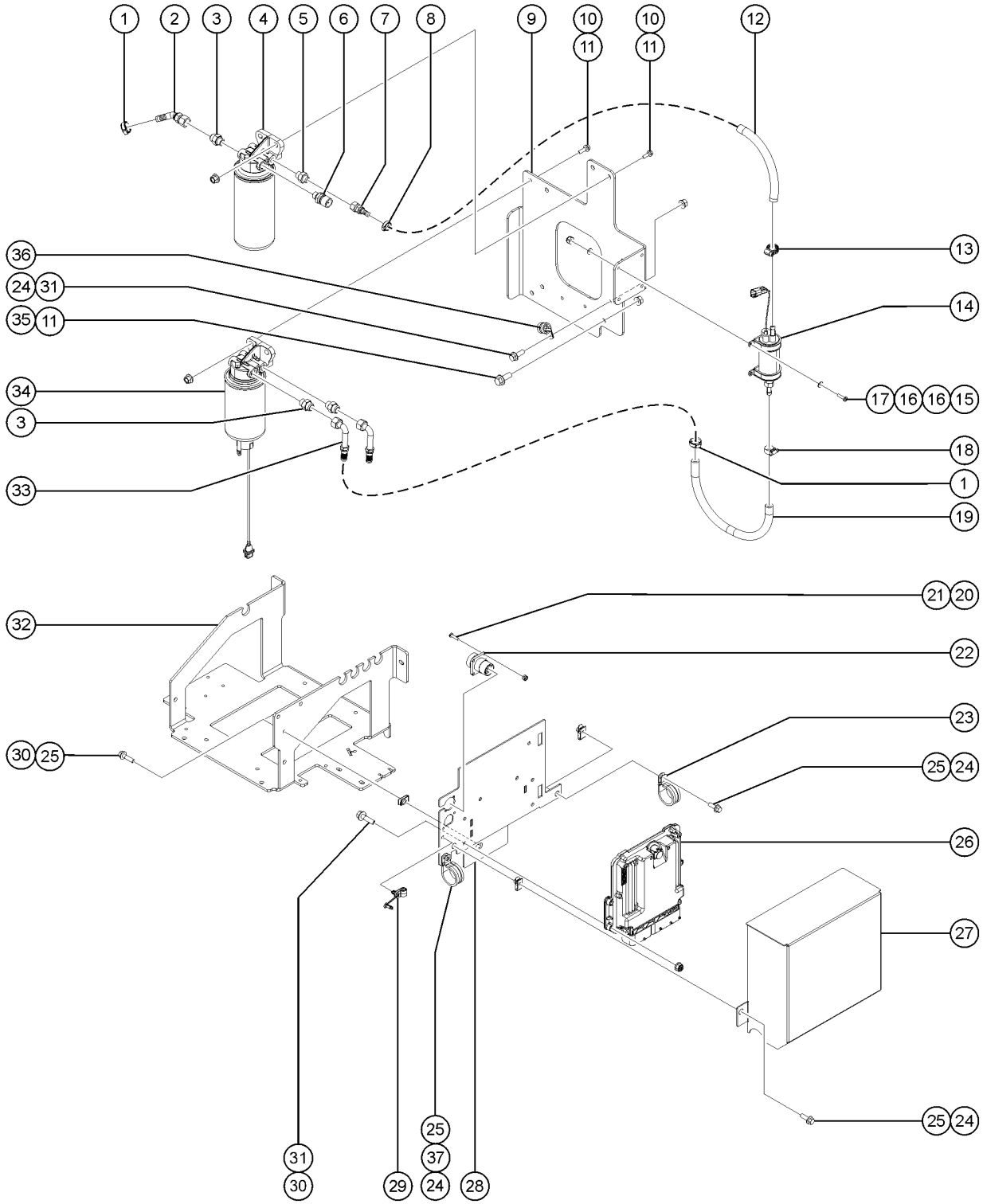

408.1 Deutz TD 2.9L4 Engine - View 4

Item	Part No.	Description	Qty.
24	824078GT	SCREW,HHF,1/4-20X.75,8,ZAG to SN S85XCH-3893	5
24B	824078GT	SCREW,HHF,1/4-20X.75,8,ZAG from SN S85XCH-3894	2
25	56912GT	SPRING CLIP,1/4-20,.025-.15X.54,ZAG to SN S85XCH-3893	8
25B	56912GT	SPRING CLIP,1/4-20,.025-.15X.54,ZAG from SN S85XCH-3894	5
26	214795GT	ECM, DEUTZ (must contact service parts to order, SN information is required)	1
27	1274200GT	BRACKET,COVER, ECU, TIER IV to SN S85XCH-3893	1
28	1279791GT	WELDMENT, ECU MOUNT, XC	1
29	219508GT	CLAMP, FIXED DIA, NYLON, 3/8"	1
30	824079GT	SCREW,HHF,1/4-20X1,8,ZAG	7
31	1277924GT	NUT,NYLOCK FLG,1/4-20,F,ZAG	6
32		REF. FORMING, BATTERY TRAY, XC (refer to 303.1)	1
33	162207GT	FITTING,ELBOW,8GS-8FJX90S	2
34	1261239GT	ASSY,FUEL PREFILTER,DEUTZ 2.9	1
34-	236260GT	FILTER, FUEL PRE-FILTER, SPIN-ON, DEUTZ	1
35	824090GT	SCREW,HHF,3/8-16X1,8,ZAG	3
36	6833GT	CLAMP,0.50,#8 X 1/4,RUB CUSH	2
36B	219508GT	CLAMP, FIXED DIA, NYLON, 3/8"	2
37	33784GT	CLAMP,1.31,#21 X 1/4,RUB CUSH to SN S85XCH-3893	3
37B	33784GT	CLAMP,1.31,#21 X 1/4,RUB CUSH from SN S85XCH-3894	2

409.1 GM 3.0L Engine - View 1

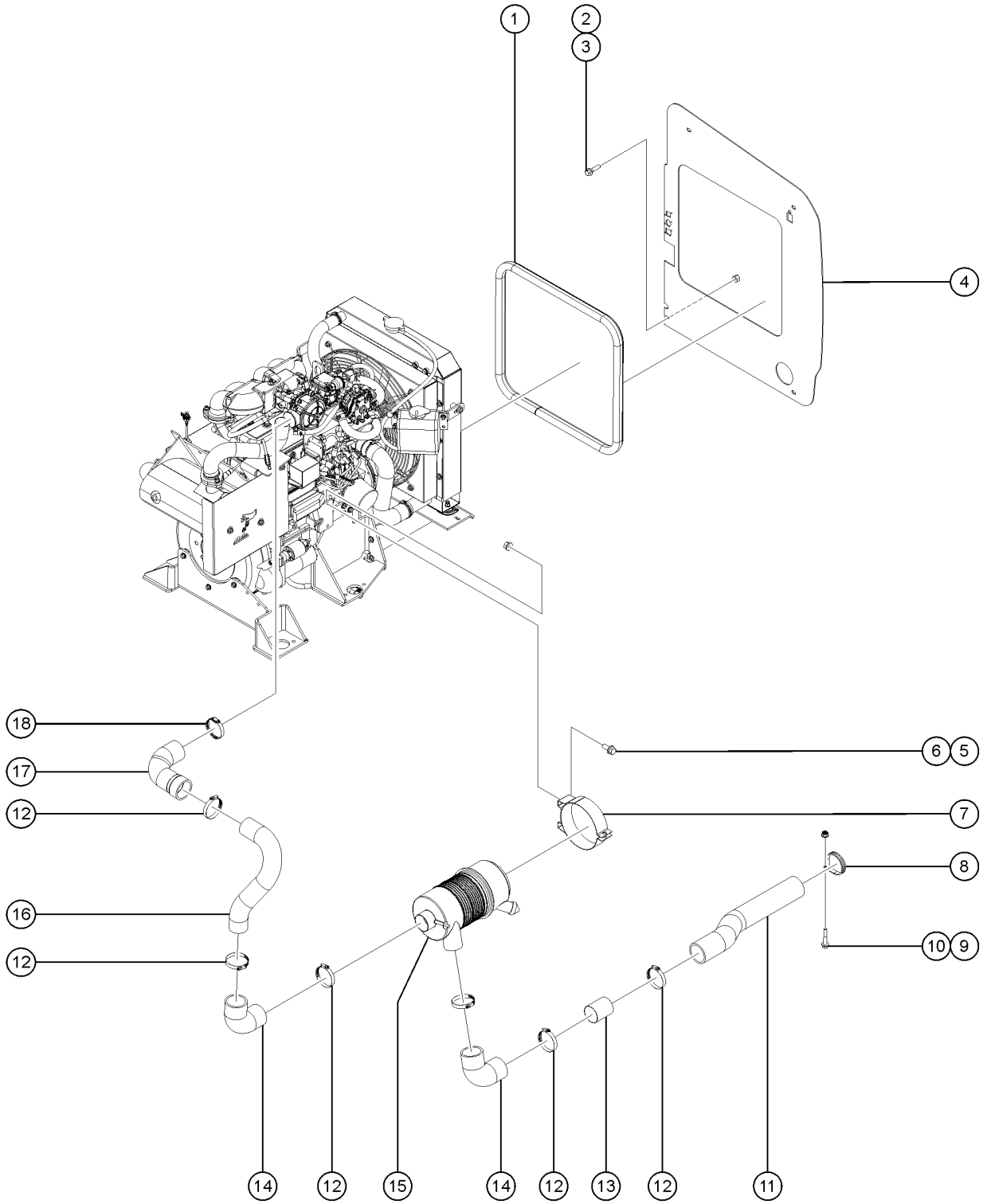

409.1 GM 3.0L Engine - View 1

Item	Part No.	Description	Qty.
-	1278263GT	S80/85XC, GM3.0L, DUAL FUEL	
1	60875GT	TRIM MOLDING	96 inches
2	824079GT	SCREW,HHF,1/4-20X1,8,ZAG	1
3	1274165GT	NUT,NYLOCK,1/4-20,C,ZAG	1
4		REF. PLATE, BULKHEAD, GM 3.0L (refer to 417.1)	1
5	824085GT	SCREW, HHF, 5/16-18 X .75, 8, ZAG	2
6	1274167GT	NUT,NYLOCK FLG,5/16-18,F,ZAG	2
7	53952GT	BRKT,AIR CLEANER ORIENTATION**	1
8	70257GT	CLAMP,3.0,#48 X 1/4,RUB CUSH	1
9	824081GT	SCREW, HHF, 1/4-20 X 1.5, 8, ZAG	1
10	1277924GT	NUT,NYLOCK FLG,1/4-20,F,ZAG	1
11	88846GT	HOSE,AIR INLET	1
12	30971GT	CLAMP,HOSE,3.00"	6
13	94324GT	TUBE,RD,STL,ALUMIZD,2.5 X .065	3 inches
14	34164GT	ELBOW,90 DEGR,RUBBER,2.5"I.D.*	2
15	63463GT	AIR CLEANER,NELSON***	1
15-	58415GT	CLIP,AIR CLEANER END CAP*** end cap not available separately	
15-	62420GT	FILTER, AIR D2.9L4	
15-	65810GT	BAFFLE, AIR CLEANER (27915)**	
15-	52866GT	EVACUATOR VALVE-AIR CLEANER	
16	70465GT	TAILPIPE,DEUTZ BF4L2011	1
17	1269549GT	HOSE,CLEANAIR,90DEG,2.25X2.5	1
18	45435GT	CLAMP,HOSE,2.50"	1

410.1 GM 3.0L Engine - View 2

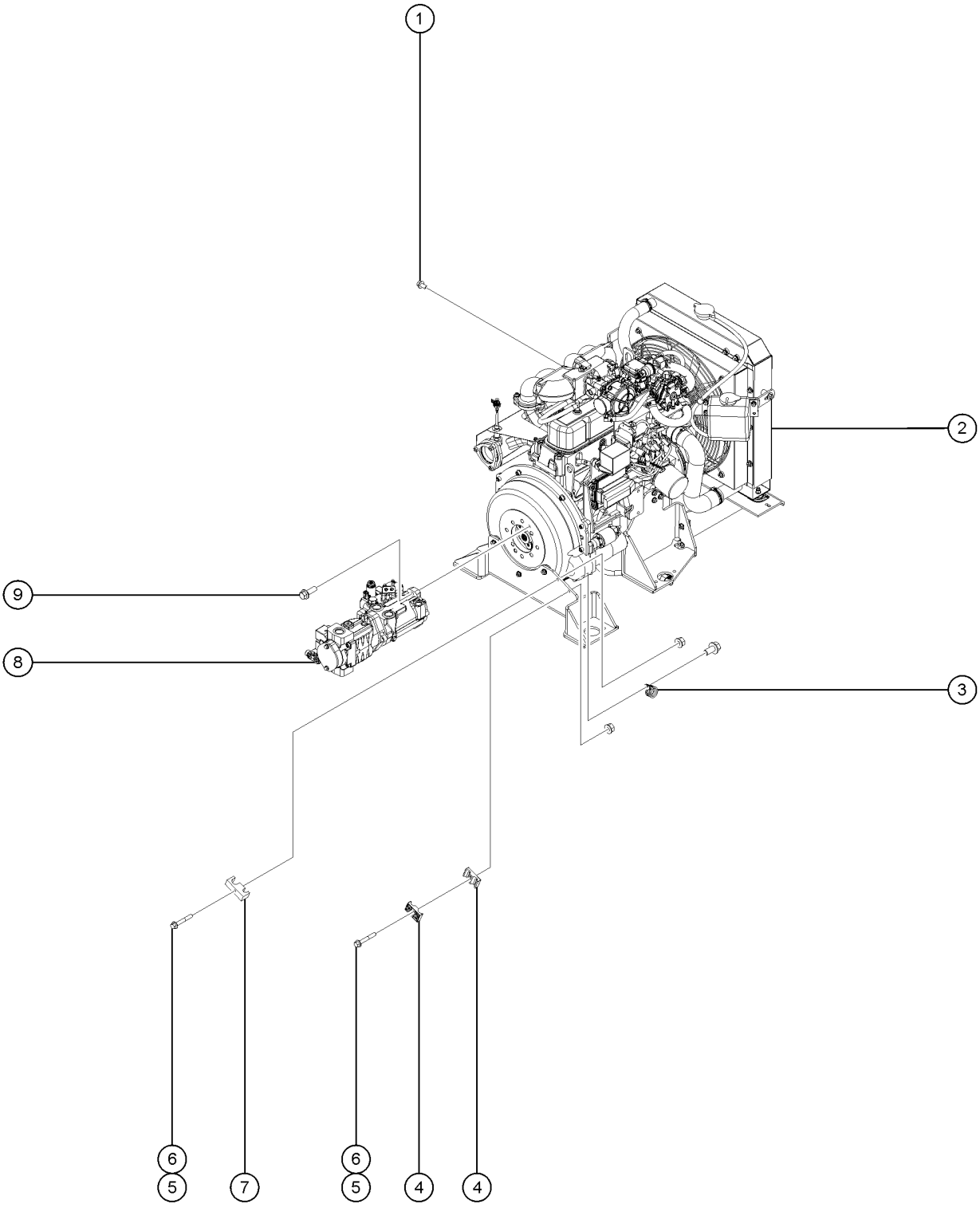

410.1 GM 3.0L Engine - View 2

Item	Part No.	Description	Qty.
1	824089GT	SCREW, HHF, 3/8-16 X .75, 8, ZAG	1
2		REF. KIT, ENGINE, GM3.0L, PSI (refer to 412.1)	
3	13268GT	CLAMP,0.75,#12 X 1/4,RUB CUSH	2
4	78736GT	CLAMP,2 HOSE,PLASTIC	2
5	824082GT	SCREW, HHF, 1/4-20 X 1.75, 8, ZAG	2
6	1277924GT	NUT,NYLOCK FLG,1/4-20,F,ZAG	2
7	121860GT	CLAMP, HOSE/CABLE	1
8		REF. DRIVE PUMP AND FUNCTION PUMP (refer to 708.1)	
9	1253498GT	SCREW,HHF,1/2-13X1.5,8,ZAG	2

411.1 GM 3.0L Engine - View 3

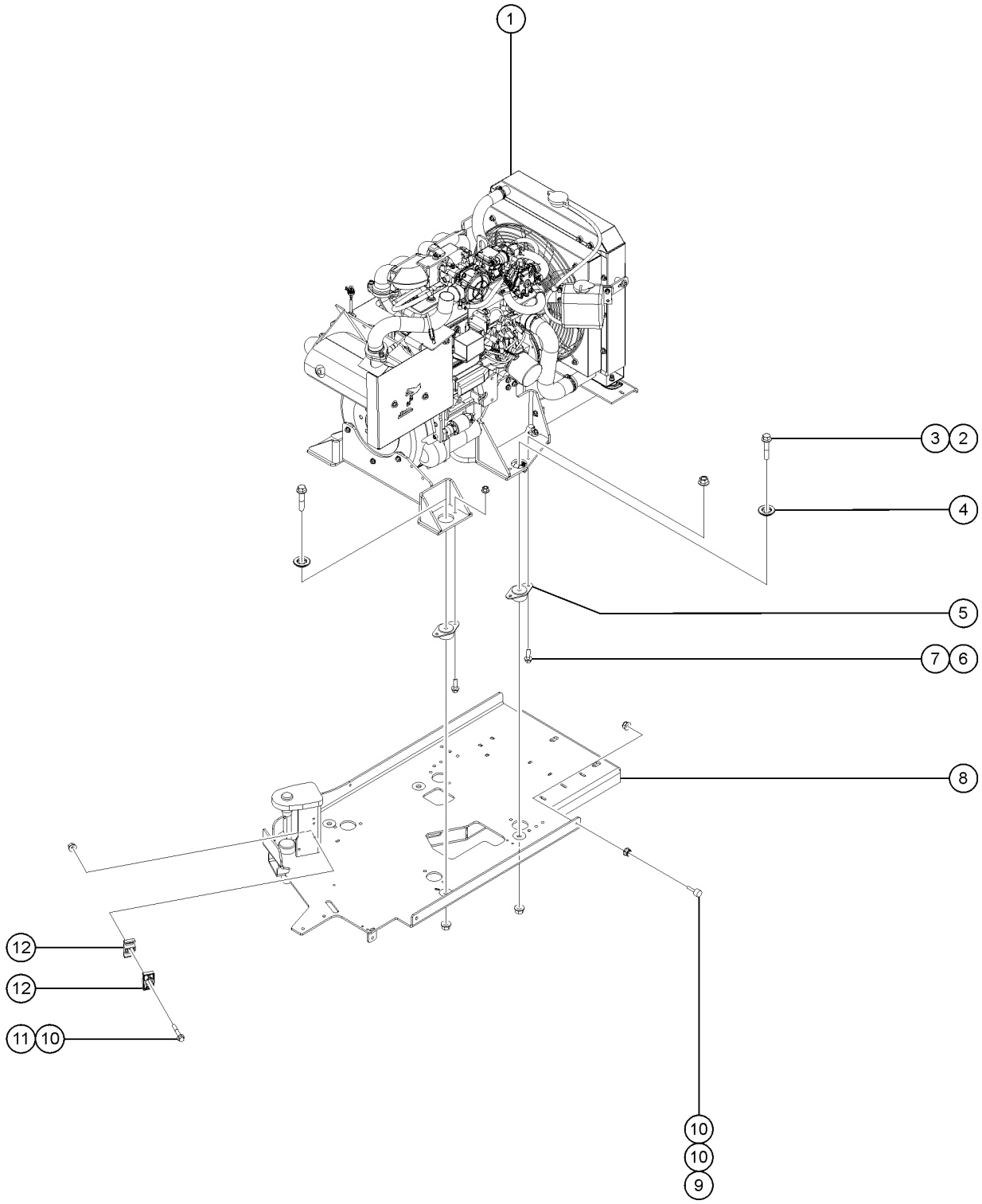

411.1 GM 3.0L Engine - View 3

Item	Part No.	Description	Qty.
1		REF. KIT, ENGINE, GM3.0L, PSI (refer to 412.1)	
2	1255802GT	SCREW,HHF,1/2-13X2.5,8,ZAG	4
3	1274172GT	NUT,NYLOCK FLG,1/2-13,G,ZAG	4
4	1274069GT	CASTING, WASHER, ENGINE ISOLAT	4
5	70452GT	ISOLATOR,ENGINE VIBRATION	4
6	824091GT	SCREW, HHF, 3/8-16 X 1.25, 8, ZAG	8
7	1274322GT	NUT,NYLOCK FLG,3/8-16,F,ZAG	8
8		REF. WELDMENT,ENGINE TRAY,2.9L DEUTZ (refer to 417.1)	
9	36388GT	BUMPER,RUBBER,.75 X .50H,STUD	1
10	1277924GT	NUT,NYLOCK FLG,1/4-20,F,ZAG	3
11	824082GT	SCREW, HHF, 1/4-20 X 1.75, 8, ZAG	1
12	78736GT	CLAMP,2 HOSE,PLASTIC	2

412.1 GM 3.0L Engine - View 4

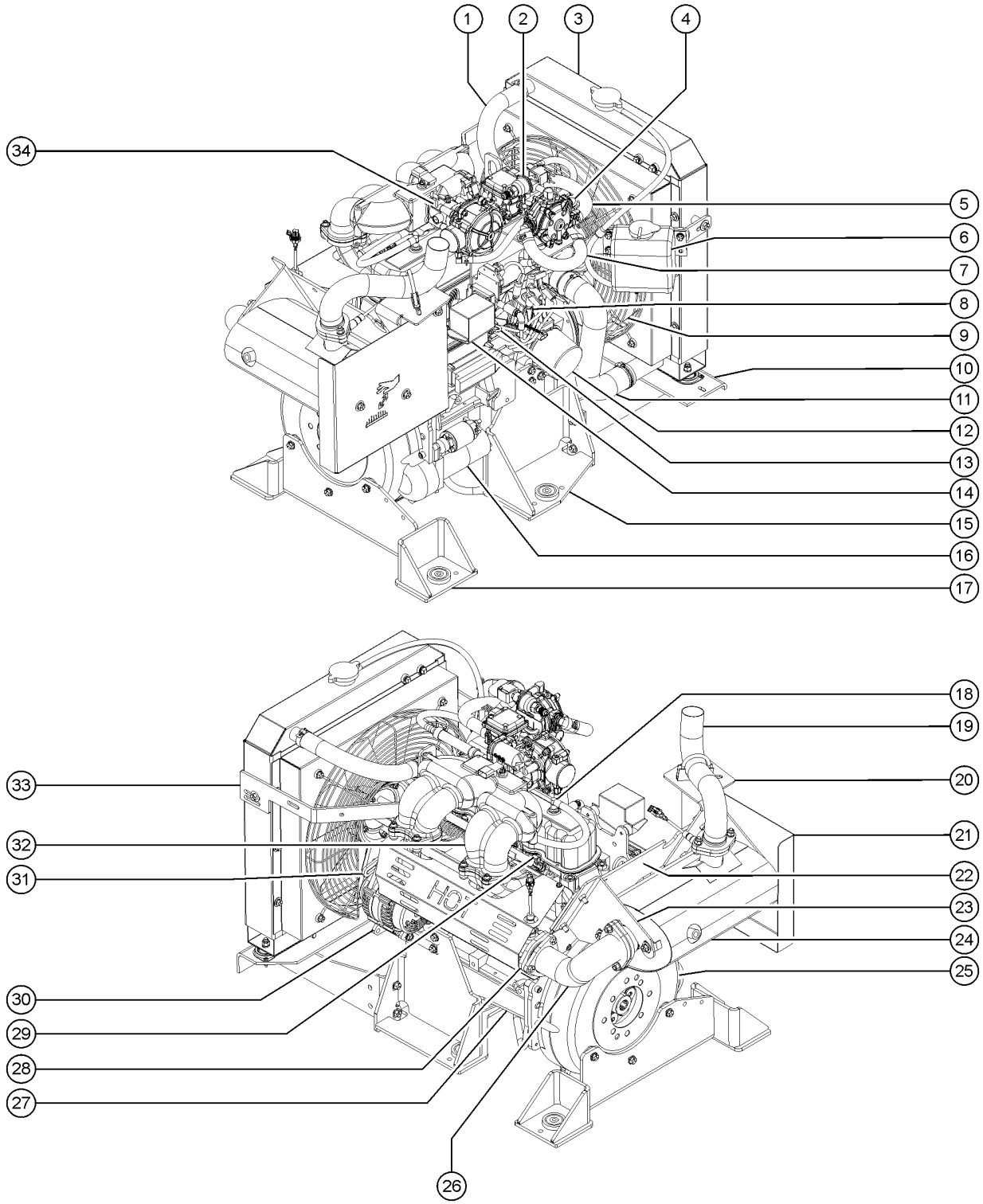

412.1 GM 3.0L Engine - View 4

Item	Part No.	Description	Qty.
B	1273154GT	MANUAL, OPERATORS, GM 3.0L	
C	1273165GT	MANUAL, SVC AND REPAIR, GM 3.0L	
D	119475GT	MAP SENSOR, DSG-423	1
E	1271825GT	ECM, SSI .79L / .97L	
1	81424GT	RADIATOR HOSE,UPPER-GM	1
1B	1284622GT	OUTLET,T/STAT,GM 3.0L ENG	1
1C	1272070GT	THERMOSTAT, GM3.0L ENG	1
1D	1284623GT	GASKET,T/STAT COVER,GM 3.0L ENG	1
1E	1284624GT	HOUSING,THERMOSTAT,GM 3.0L ENG	1
1F	1284626GT	GASKET,T/S HSG,GM 3.0L ENG	1
1G	1284625GT	SENSOR,AS,GM 3.0L ENG	1
2	58386GT	GM 3.0, LP REGULATOR	
2-	1271808GT	VALVE, LOCK-OFF W/FILTER	1
2-	1271815GT	FITTING, 70 DEGREE SWEPT 5/8" Vaporizer hot water supply	
2B	64066GT	HOSE ASSEMBLY,LP GAS 174" LONG	1
3	1272060GT	RADIATOR, GM3.0L ENG	1
3-	1284786GT	CAP,RADIATOR,GM 3.0L ENG	1
4	1272044GT	HOSE, FUEL, GM3.0L ENG Vaporizer hot water return to engine (cut to size)	
5	1272045GT	HOSE, VAPORIZER Vaporizor to Throttle Body	1
6	1272025GT	BOTTLE, OVERFLOW, GM3.0L ENG	1
6B	1284630GT	HOSE, OVERFLOW	1
7	1272044GT	HOSE, FUEL, GM3.0L ENG	1
8	77550GT	DISTRIBUTOR/GM 3.0L ENGINE	1
8-	65624GT	CAP-DISTRIBUTOR, GM 3.0L	
8-	65625GT	ROTOR-DISTRIBUTOR, GM 3.0L	
8-	1284627GT	SENSOR,CAMSHAFT,GM 3.0L ENG	
8B	58412GT	SPARK PLUG WIRE SET,GM 3.0 set of 4 plug wires; order 1284619 coil wire separately	1
8B-	1284619GT	WIRE,COIL,HVS,GM 3.0L ENG	1

412.1 GM 3.0L Engine - View 4

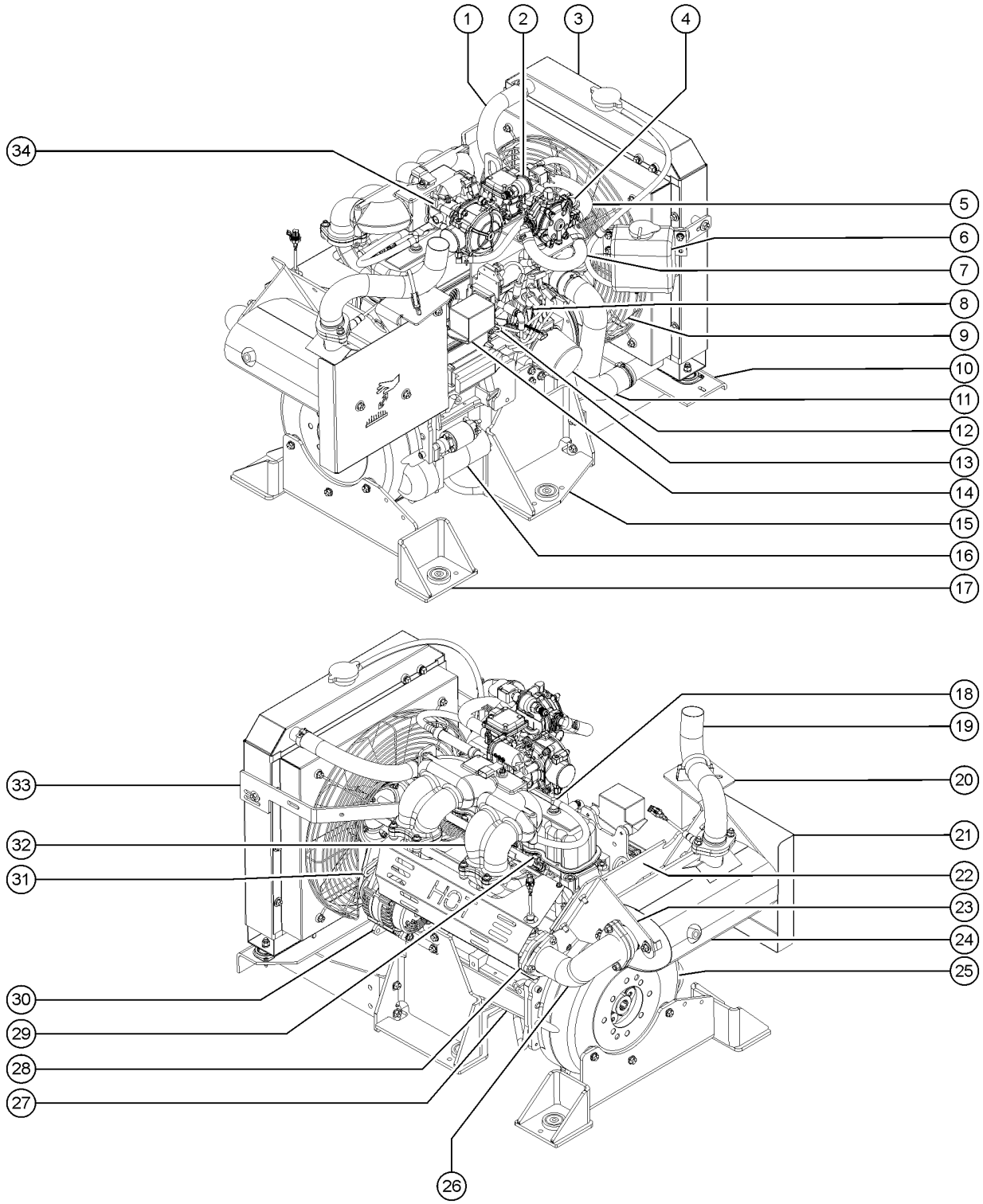

412.1 GM 3.0L Engine - View 4

Item	Part No.	Description	Qty.
8C	65622GT	SPARK PLUG-GM 3.0L ENGINE	4
8D	77551GT	COIL-IGNITION/GM 3.0L ENGINE	1
9	1272057GT	FAN, PULLER 18", GM3.0L ENG	1
9B	1272059GT	PUMP, WATER, GM3.0L ENG	1
9B-	1284785GT	GASKET,WATER PUMP	
9C	1272039GT	GASKET, TIMING CHAIN, GM3.0L	
10	1284633GT	SUPPORT,RADIATOR,GM 3.0L ENG	1
10B	1272049GT	ISOLATOR, GM3.0L ENG	2
11	1272046GT	HOSE, RAD, LOWER, GM3.0L ENG	1
12	65623GT	FILTER-OIL,GM 3.0L ENGINE	1
12-	1272065GT	SENDER, OIL PRESSURE, GM3.0L ENG	1
13	1272026GT	DIPSTICK, GM3.0L ENG	1
13B	1284621GT	TUBE,DIPSTICK,GM 3.0L ENG	1
14	1272050GT	ISOLATOR, RUBBER, GM3.0L ENG	2
15	1284667GT	MOUNT,ENG,GM 3.0L ENG refer to 411.1 for isolator	1
15B	1284618GT	SENSOR/BRKT KIT,GM 3.0L ENG located behind engine support at distributor side of engine	1
15C	58634GT	GASKET, VALVE COVER, GM ENG engine side cover gasket; located behind engine support at distributor side of engine	
16	1272069GT	STARTER, GM3.0L ENG	1
17	1284666GT	BRACKET,REAR MOUNT,ALT,GM3.0L ENG secure to bellhousing; refer to 411.1 for isolator	2
18	58634GT	GASKET, VALVE COVER, GM ENG	1
18-	1272024GT	BOLT, CYLINDER HEAD, GM3.0L ENG	
18-	1272030GT	GASKET, CYL HEAD, GM3.0L ENG	
18B	65620GT	PCV VALVE-GM 3.0L ENGINE (rear) (hose routed to intake manifold)	1
18B-	1272042GT	GROMMET,PCV (rear)	1
18C	77540GT	CAP,OIL FILLER (front) (hose routed to throttle body)	1
18C-	1284620GT	ELBOW (front)	1
18C-	1272043GT	GROMMET, PCV TUBE, GM3.0L ENG (front)	
18C-	1272047GT	HOSE, VAPOR, GM3.0L ENG (front) (adapter hose)	1

412.1 GM 3.0L Engine - View 4

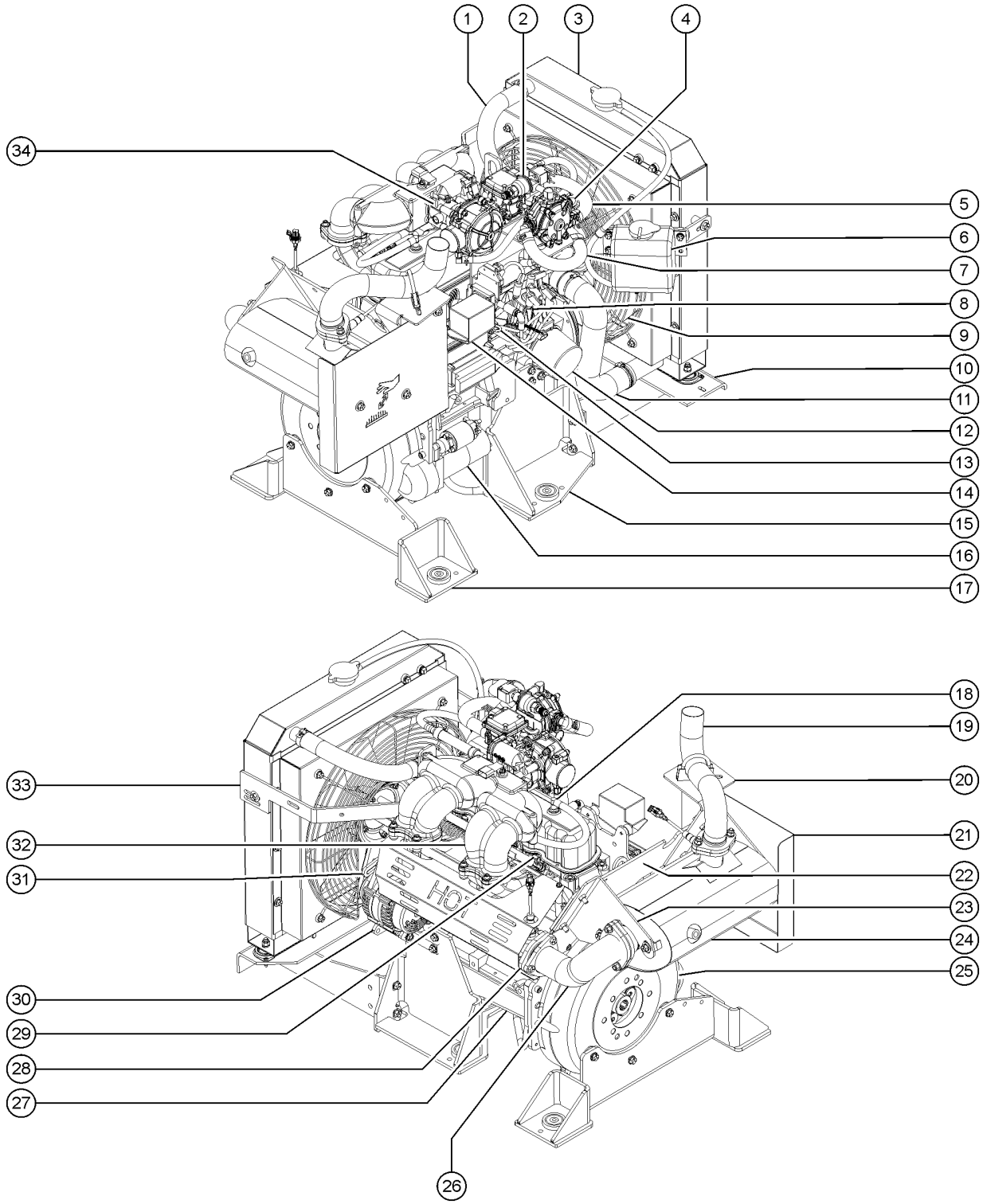

412.1 GM 3.0L Engine - View 4

Item	Part No.	Description	Qty.
19	1284643GT	TAILPIPE,EXHAUST,GM 3.0L ENG	1
19B	1284639GT	SEAL,EXHAUST,GM 3.0L ENG	1
19C	139610GT	SENSOR,AIR,CAT MONITOR	
20	1284644GT	BRACKET,CATALYST,GM3.0L ENG	1
21	1284645GT	SHIELD,HEAT,GM 3.0L ENG	1
22	1284637GT	BRACKET,MUFFLER,GM3.0L ENG	1
23	1284642GT	BRACKET,CATALYST,GM3.0L ENG	1
24	1284638GT	MUFFLER,CATALYST,GM3.0L ENG	1
24B	1284636GT	FLANGE,EXHAUST,GM3.0L ENG	
24C	139610GT	SENSOR,AIR,CAT MONITOR	1
25	83047GT	RING GEAR,GM , S-85	1
25B	1284617GT	SENSOR,C/SHAFT,GM 3.0L ENG use until exhaust replace by 1272067GT	1
25C	1272067GT	SENSOR, CRANK, GM3.0L ENG	1
25D	1272062GT	SEAL, CRANKSHAFT, GM3.0L ENG round	1
25E	1272037GT	GASKET, OIL SEAL, GM3.0L ENG	
25F	1284628GT	PLATE,HOUSING,GM 3.0L ENG lower inspection cover	
25G	1284629GT	DRIVE PLATE,GM 3.0L ENG attached to crankshaft	
26	1284641GT	PIPE,EXHAUST,GM3.0L ENG	1
26B	1272064GT	SEAL, EXHAUST, H/T, GM3.0L ENG (at muffler)	1
26C	1272031GT	GASKET, DOUNUT, GM3.0L ENG (at exhaust manifold)	1
26D	1284635GT	FLANGE,EXHAUST,GM3.0L ENG	1
27	1272035GT	GASKET, OIL PAN, GM3.0L ENG	1
27-	1272058GT	PUMP, OIL, GM3.0L ENG	
27B	1272055GT	PLUG, OIL DRAIN, GM3.0L ENG	
27B-	1272036GT	GASKET, OIL PLUG, GM3.0L ENG	1
28	1284649GT	MANIFOLD,EXHAUST,GM3.0L ENG	1
28B	1272032GT	GASKET, INT/EXH, GM3.0L ENG cylinder head to manifolds gasket	1
28C	1284646GT	SHIELD,HEAT,GM 3.0L ENG	1

412.1 GM 3.0L Engine - View 4

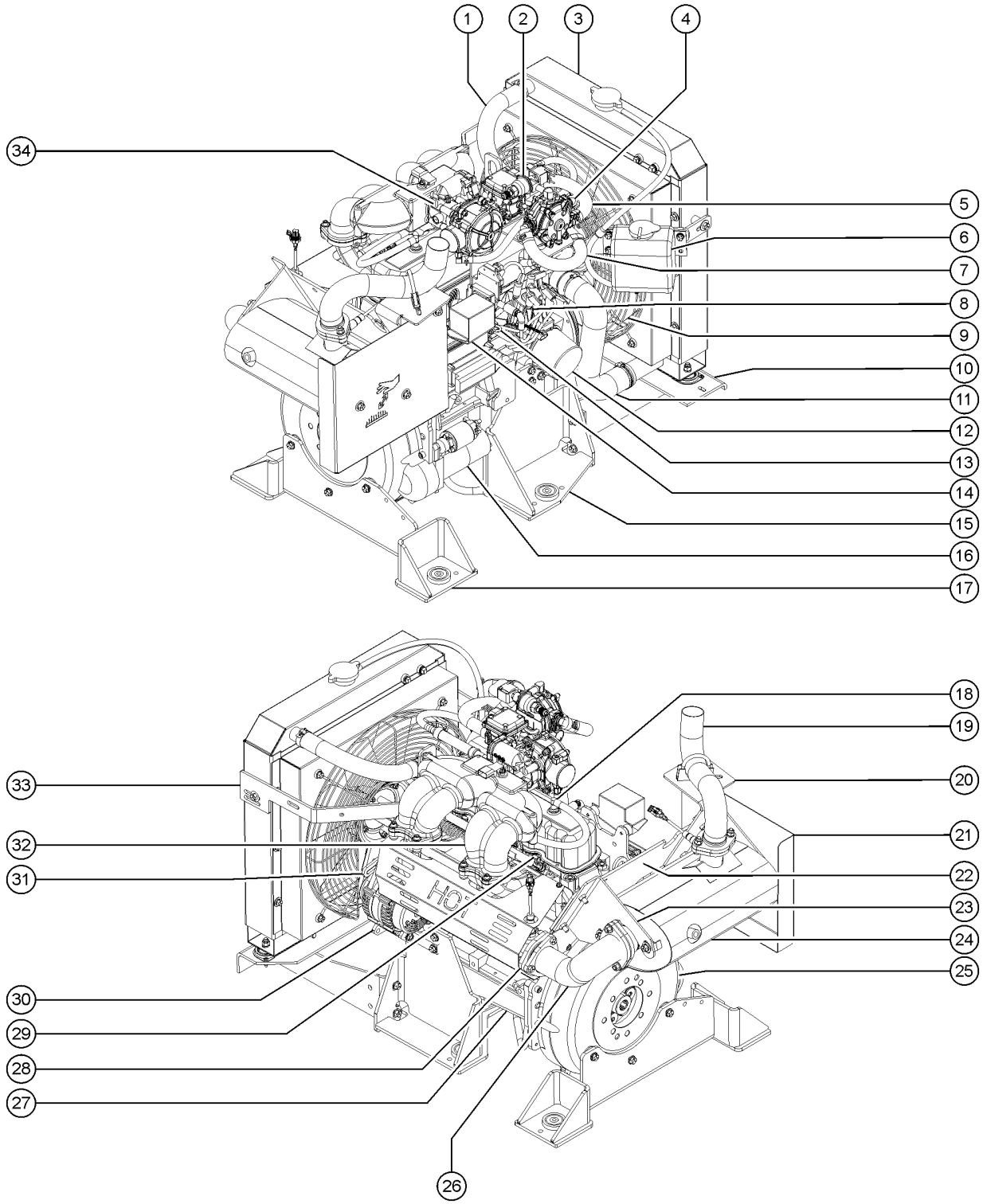

412.1 GM 3.0L Engine - View 4

Item	Part No.	Description	Qty.
28D	139610GT	SENSOR,AIR,CAT MONITOR	1
28E	1284647GT	EXHAUST FLANGE,GM 3.0L ENG	
28F	1272031GT	GASKET, DOUNUT, GM3.0L ENG	
29	1272061GT	RAIL, FUEL, W/INJ, GM3.0L ENG	1
30	77822GT	ALTERNATOR, GM3.0L ENGINE	1
30-	1284655GT	NUT,ALTERNATOR,GM 3.0L ENG for 77822	2
30B	1284654GT	BRACKET,ALTERNATOR,GM3.0L ENG alternator mount bracket	1
30B-	1284663GT	BOLT,ALT MNTG,GM3.0LENG alternator pivot bolt	1
30B-	1284660GT	WASHER,LCK,ALT,GM3.0L ENG for 1284663	1
30B-	1284661GT	WASHER,ALT,GM3.0L ENG for 1284663	2
30B-	1284662GT	NUT,ALT MNTG,GM3.0L ENG for 1284663	1
30B-	1284664GT	WASHER,FLAT,GM3.0L ENG for 1284663	2
30B-	1284665GT	BOLT,GM 3.0L ENG to install 1284654	2
30B-	1284653GT	SPACER,ALT,GM 3.0L ENG for 1284663	1
30C	1284651GT	BELT,ALTERNATOR,GM 3.0L ENG	1
31	1284652GT	STRAP,ALT,GM3.0L ENG alternator belt tension bracket	
31-	1284659GT	BOLT,ALTERNATOR,GM 3.0L ENG belt bracket pivot bolt	
31-	1284658GT	WASHER,LCK,ALT,GM3.0L ENG for 1284659	
31B	1284656GT	BOLT,ALTERNATOR,GM 3.0L ENG for belt tension	1
31B-	1284657GT	WASHER,ALT,GM3.0L ENG for 1284656	
32	1284648GT	MANIFOLD,INTAKE,GM 3.0L ENG upper intake manifold	1
32-	1284650GT	MANIFOLD,INTAKE,GM 3.0L ENG lower intake manifold	1
32-	1272033GT	GASKET, INTAKE, GM3.0L ENG upper intake to lower intake	2
32B		REF., GASKET (refer to item 28B)	1
33	1284631GT	BRKT,RADIATOR TOP LH,GM3.0L ENG exhaust side	1
33B	1284632GT	BRKT,RADIATOR TOP RH,GM3.0L ENG distributor side	1
34	1271837GT	THROTTLE BODY, 40MM	1
34-	1271845GT	GASKET, THROTTLE BODY 40MM throttle body to intake manifold	

412.1 GM 3.0L Engine - View 4

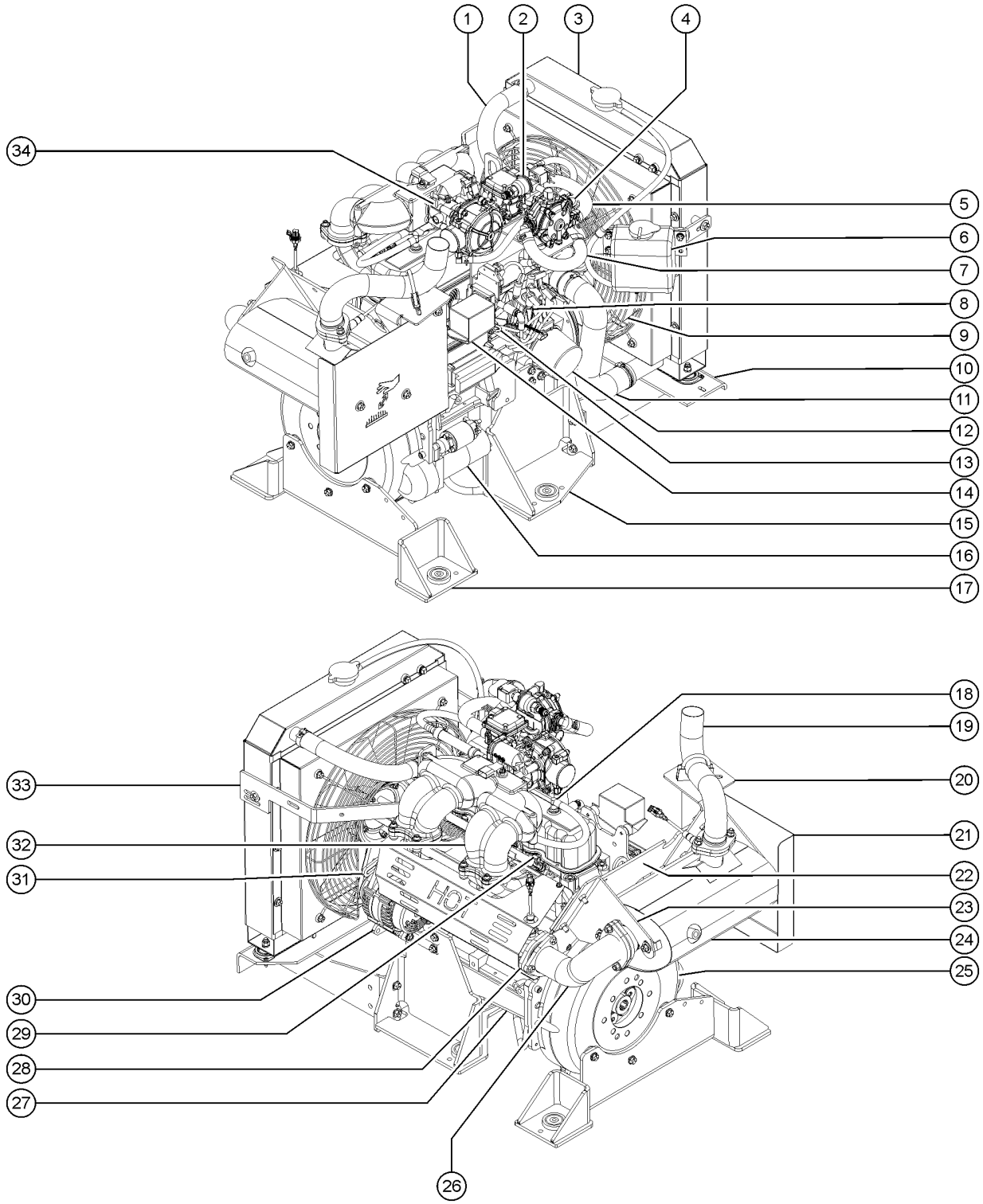

412.1 GM 3.0L Engine - View 4

Item	Part No.	Description	Qty.
34-	215280GT	MIXER, MSG425	
34-	1272054GT	ORING, MIXER ADAPTER, GM3.0L ENG mixer outlet	
34-	1284634GT	FITTING,THROTTLE BODY,GM3.0L ENG 90 degree hose fitting on mixer	
34-	1272027GT	EPR, GM3.0L ENG	
34-	1272048GT	INLET TO EPR, GM3.0L ENG EPR inlet	
35	119170GT	FUEL SENSOR ASSY. not shown	
35-	1284671GT	FITTING,GM 3.0L ENG for 119170	1
35-	1284670GT	FITTING,GM 3.0L ENG for 119170	2
36	1272019GT	FILTER, FUEL	1
36-	1284669GT	CLAMP,RUBBER,GM3.0L ENG for 1271652, 77750	1
36-	77750GT	FUEL PUMP (GM ENG) not shown	1
36-	1271871GT	FITTING & GASKET FOR FUEL PUMP for 77750	

413.1 Perkins 404D-22T Engine - View 1

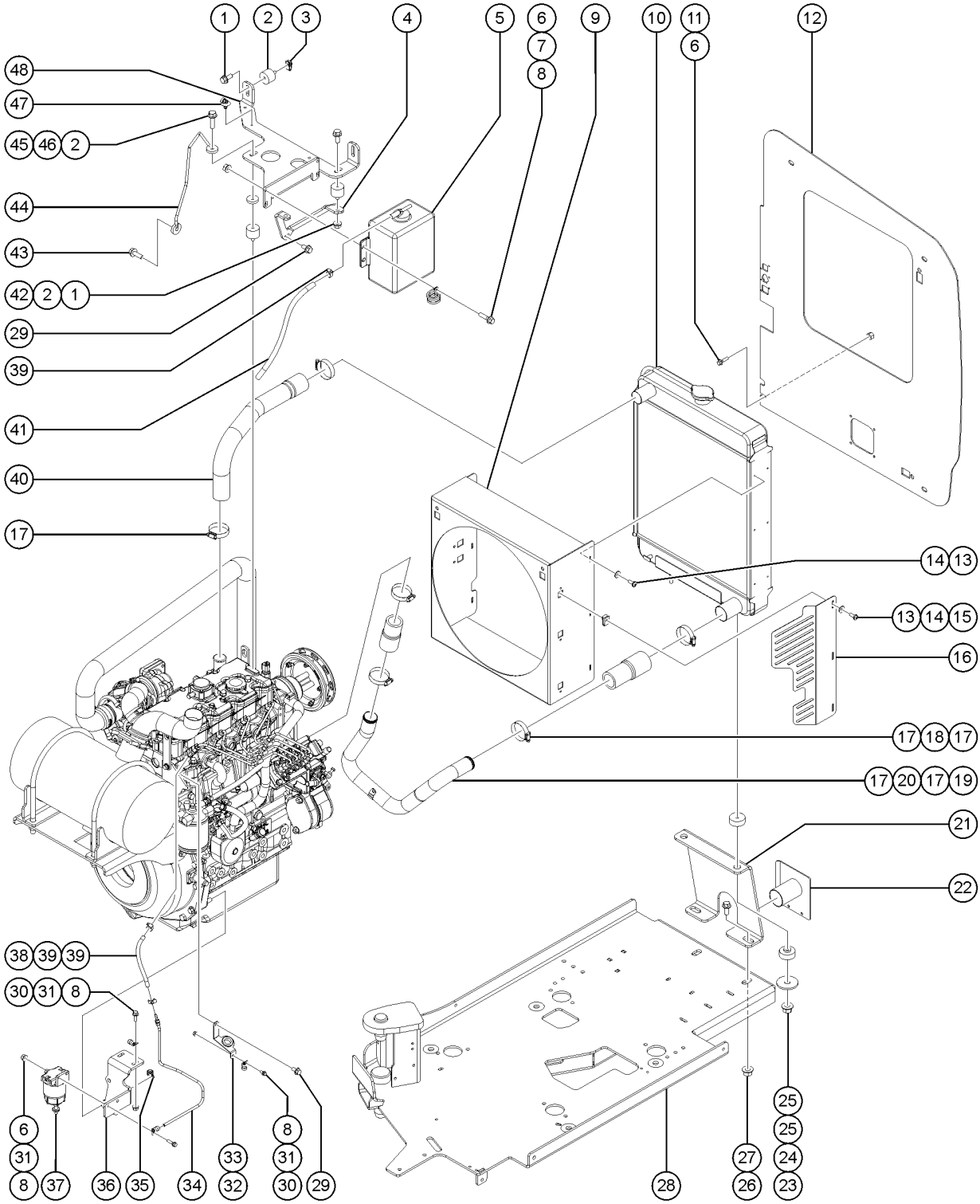

413.1 Perkins 404D-22T Engine - View 1

Item	Part No.	Description	Qty.
		Due to Tier 4 regulations, many engine replacement parts require engine serial number at time of order placement. When ordering engine parts please have both machine and engine serial numbers available. For internal engine parts, contact engine deale	
A-	1261963GT	BREATHER VALVE,PERKINS 404D-22T	
A-	1261964GT	DIPSTICK TUBE,PERKINS 404D-22T	
A-	1262595GT	CYLINDER HEAD COVER,PERKINS 404D	
A-	1261966GT	PISTON AND RING KIT,PERKINS 404D-22T	
A-	1261969GT	PISTON RING KIT,PERKINS 404D-22T	
A-	1262598GT	EXHAUST VALVE,PERKINS 404D	
A-	1262016GT	SPEED SENSOR,PERKINS 404D-22T	
A-	1262467GT	SOLENOID,PERKINS 404D-22T	
A-	1262469GT	OIL PRESSURE SWITCH,PERKINS 404D-22T	
A-	1262490GT	GASKET,CYL HEAD COVER,PERKINS 404D-22T	
A-	1262496GT	SEAL,ROCKER BOX,PERKINS 404D-22T	
A-	1262498GT	O-RING,LIFT PUMP,PERKINS 404D-22T	
A-	1262500GT	GASKET,EXHAUST MANIFOLD,PERKINS 404D-22T	
A-	1262589GT	GASKET,AIR PIPE HOUSING,PERKINS 404D	
1	824132GT	SCREW,HHF,M8-1.25X20,DIN6921,10.9,ZAB	4
2	60585GT	ISOLATOR,VIBRATION,M8 MALE/FEM	5
3	230820GT	SPRING CLIP, M8-1.25, 0.8-4.0 X 13, ZAB	2
4	1253194GT	BRACE,UPPER RADIATOR SUPPORT,	1
5	70367GT	BOTTLE,COOLANT RECOVERY,3.7***	1
6	824079GT	SCREW,HHF,1/4-20X1,8,ZAG	7
7	13268GT	CLAMP,0.75,#12 X 1/4,RUB CUSH	1
8	824027GT	NUT, TL FLG, 1/4-20, G, ZAG	8
9	1253192GT	FAN SHROUD,PERKINS 404F-22T	1
10	110304GT	RADIATOR,FORD/PERKINS***	1
11	824089GT	SCREW, HHF, 3/8-16 X .75, 8, ZAG	3
12	1270964GT	PLATE, BULKHEAD, PERKINS 404F	1
13	824220GT	SCREW,PHPM SEMS ET,10-24X.5,ZA	9

413.1 Perkins 404D-22T Engine - View 1

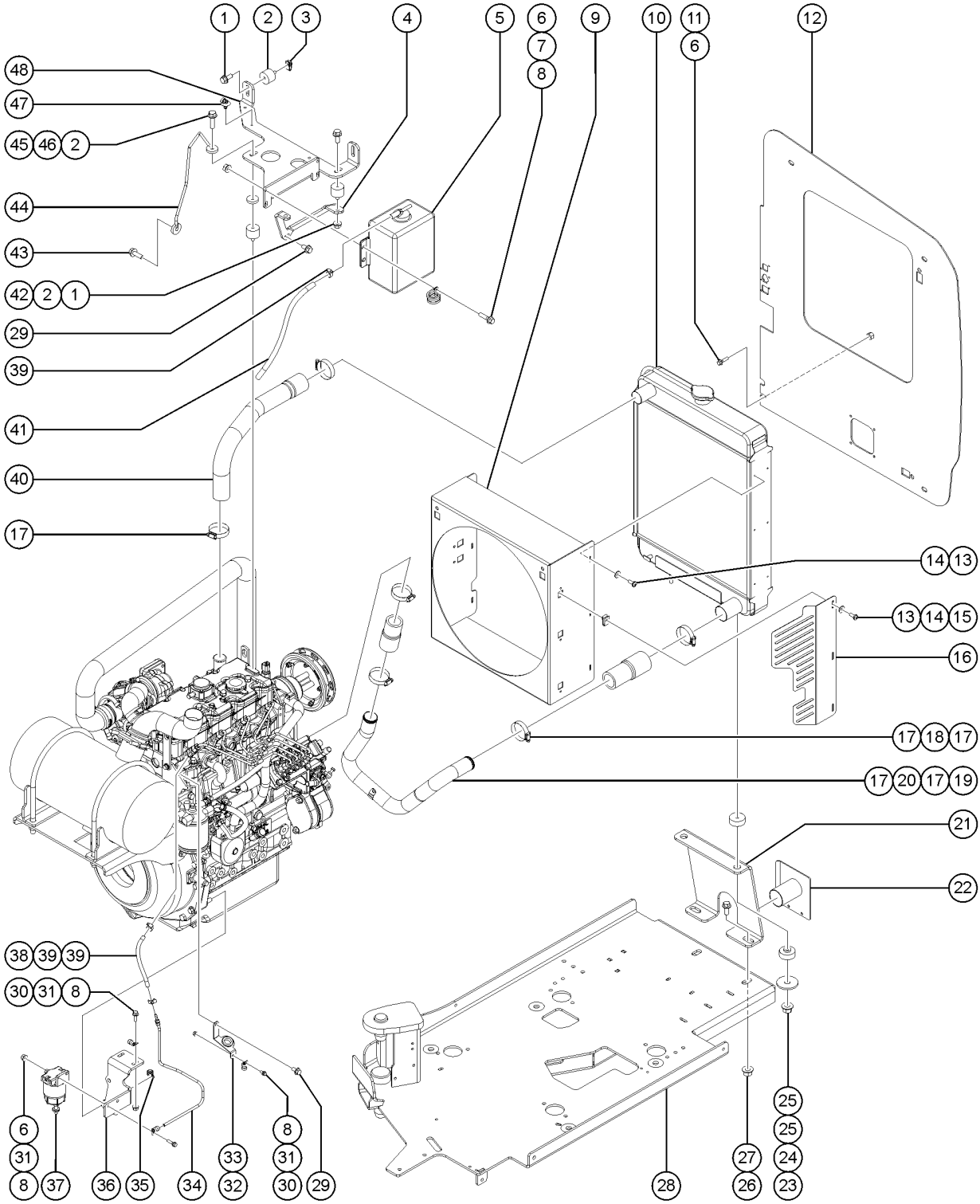

413.1 Perkins 404D-22T Engine - View 1

Item	Part No.	Description	Qty.
14	1253185GT	WASHER,FLAT,#10,USS,ZAG	9
15	73575GT	SPRING CLIP,10-24,.025-.125X.468,ZAG	3
16	1254471GT	GUARD,FAN,PERKINS 404F-22T	1
17	22672GT	CLAMP,HOSE,1.75	6
18	1261204GT	HOSE COUPLING,RUBBER,LOWER RAD	1
19	1261882GT	WELDMENT,LOWER RADIATOR SSTL,	1
20	1261205GT	HOSE COUPLING,RUBBER,LOWER RAD	1
21	1253193GT	BRACKET,LOWER RADIATOR	1
22	1253431GT	WELDMENT,INTAKE,PERKINS 404F-	1
23	824029GT	NUT, TL FLG, 3/8-16, G, ZAG	2
24	824120GT	WASHER, FLAT, .375 X 1.50 X .125, ZAG	2
25	24038GT	SHOCK MOUNT,SMALL	4
26	1253319GT	NUT,TL FLG,5/8-11,G,ZAG	2
27	1253208GT	SCREW,HHF,5/8-11X1.5,8,ZAG	2
28		REF. WELDMENT,ENGINE TRAY,2.9L DEUTZ (refer to 417.1)	1
29	1251983GT	SCREW,HHF,M8-1.25X16,DIN6921,10.9,ZAB	2
30	824077GT	SCREW, HHF, 1/4-20 X .5, 8, ZAG	1
31	45470GT	CLAMP,0.31,#5 X 1/4,RUB CUSH	4
32	1259890GT	FORMING, SUPPORT, FUEL RETURN	1
33	1260927GT	GROMMET, RUBBER, .75X.375X1.25	1
34	1259907GT	WELDMENT,FUEL RETURN LINE,404D	1
35	112043GT	CLAMP,0.63,#10 X 3/8,RUB CUSH	1
36	128588GT	FORMING,SOLENOID MOUNT	1
37	75020GT	SEPRTR/FLTR,FUEL DSL,15GPH,.30	1
37-	21465GT	CLAMP,HOSE, .25" TO .63" X .3125"	
37-	54205GT	HOSE END,BARB,1/4 MNPTX5/16,90	
38	824078GT	SCREW,HHF,1/4-20X.75,8,ZAG	1

413.1 Perkins 404D-22T Engine - View 1

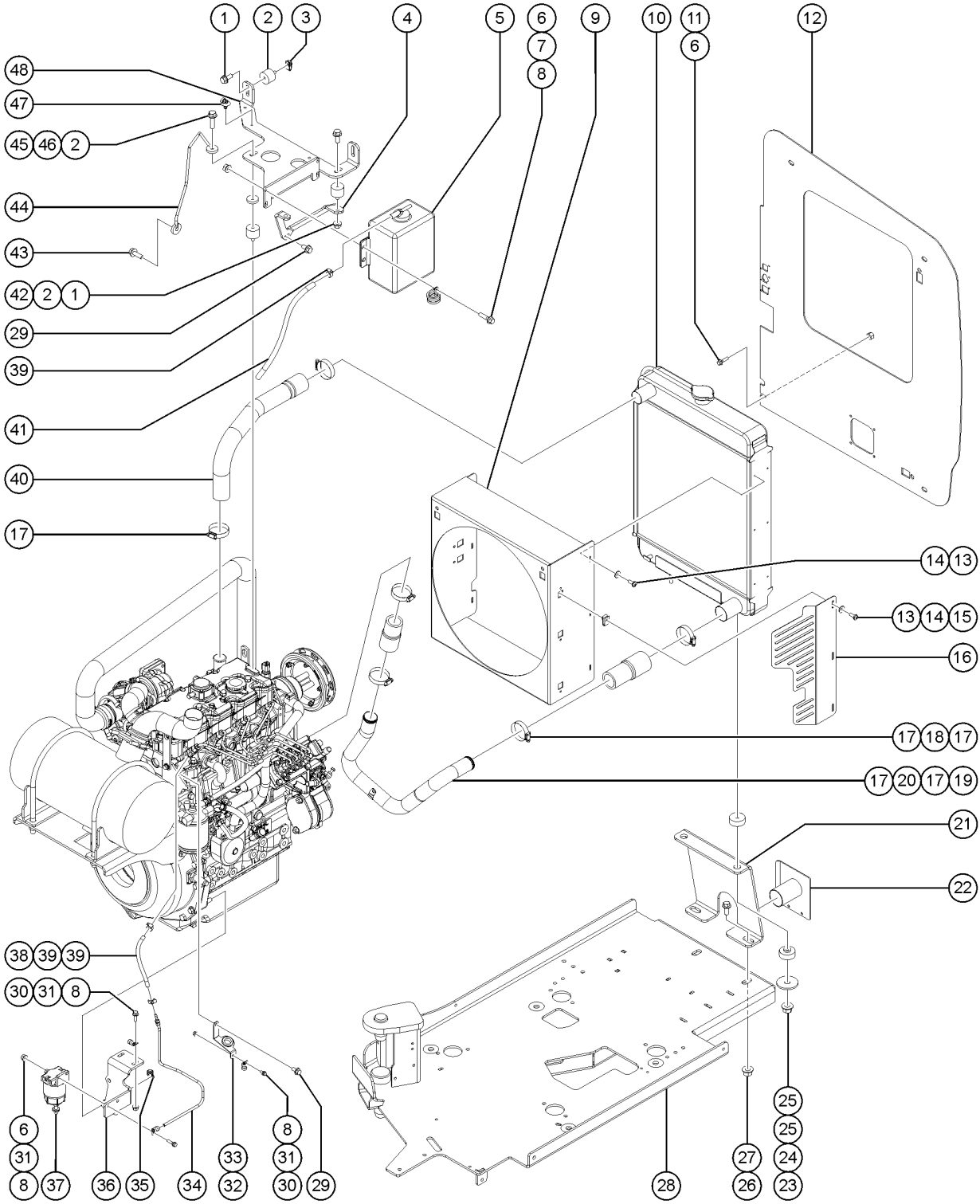

413.1 Perkins 404D-22T Engine - View 1

Item	Part No.	Description	Qty.
39	35418GT	HOSE,FUEL,3/16,SAE 30R7	6 inches
40	21465GT	CLAMP,HOSE, .25" TO .63" X .3125"	7
41	1252979GT	HOSE,UPPER RADIATOR,PERK	1
42	106226GT	TUBING,VINYL,1/2" CLEAR	1
43	237832GT	NUT,TL FLG,M8-1.25,DIN6927,10,ZAB	2
44	824133GT	SCREW,HHF,M8-1.25X25,DIN6921,10.9,ZAB	1
45	1259264GT	WIRE MANAGEMENT,GUIDE ROD ASSY	1
46	1255537GT	SCREW,HHF,M8-1.25X30,DIN6921,10.9,ZAB	1
47	1261722GT	WASHER, FLAT .394 X 1.25 X .25	1
48	110149GT	CABLE TIE,DFT MOUNT,BLK,6.5"	3
49	1258071GT	BRACKET,UPPER RADIATOR MOUNT,4	1

414.1 Perkins 404D-22T Engine - View 2

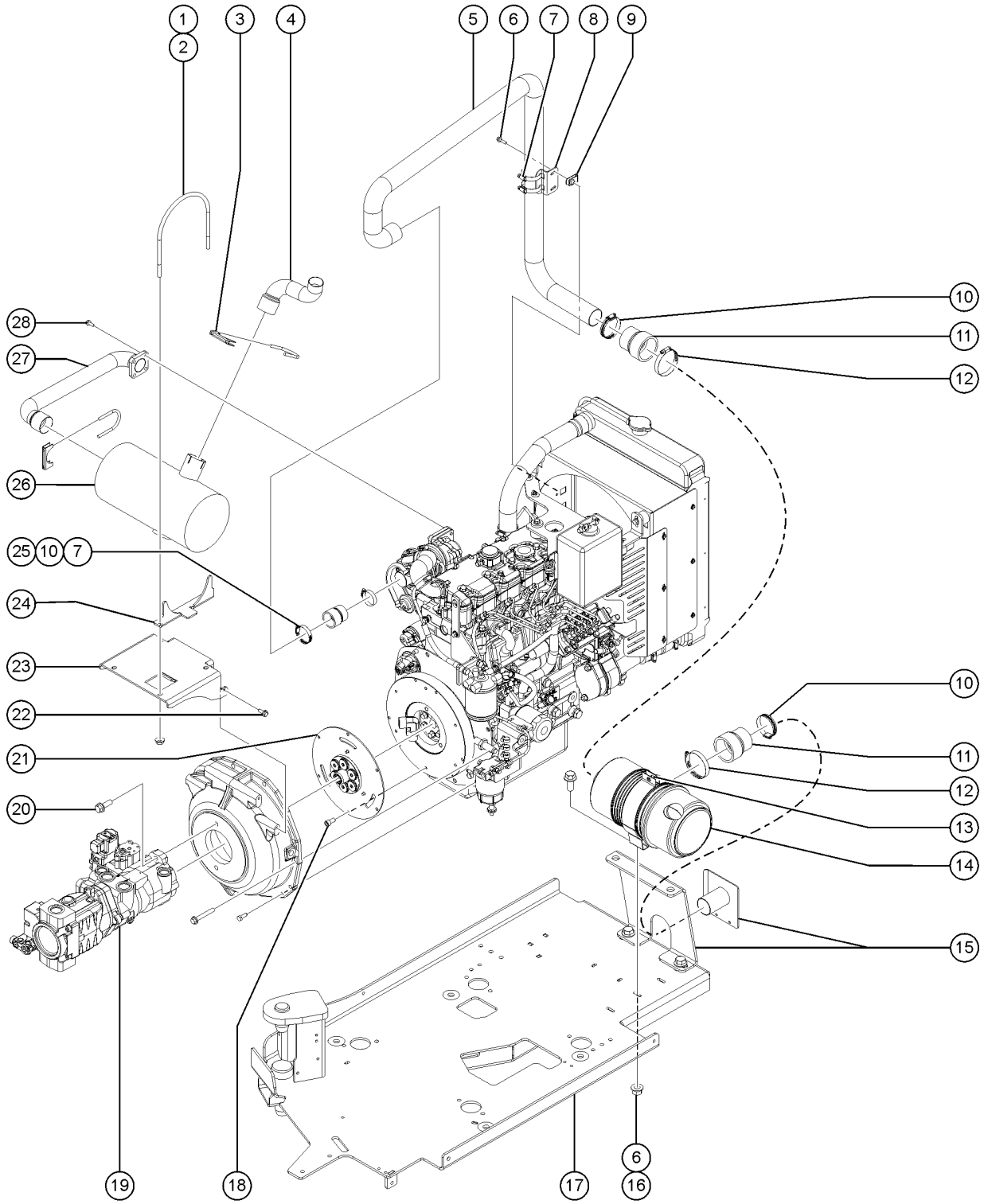

414.1 Perkins 404D-22T Engine - View 2

Item	Part No.	Description	Qty.
1	70449GT	U-BOLT,1/2-13 X 8.5	2
2	1274172GT	NUT,NYLOCK FLG,1/2-13,G,ZAG	4
3	71911GT	CLAMP,MUFFLER, 2.50 INCH	2
4	1258014GT	TAILPIPE,404D-22T,S-80	1
5	1256514GT	TUBE,INTAKE,PERKINS 404D-22T	1
6	824079GT	SCREW,HHF,1/4-20X1,8,ZAG	4
7	22672GT	CLAMP,HOSE,1.75	3
8	823751GT	BRACKET,INTAKE PIPE,MOUNT,DEUT	1
9	56912GT	SPRING CLIP,1/4-20,.025-.15X.54,ZAG	2
10	45435GT	CLAMP,HOSE,2.50"	3
11	216150GT	ADAPTER, AIR HOSE, PERK 404F	2
12	30971GT	CLAMP,HOSE,3.00"	2
13	53952GT	BRKT,AIR CLEANER ORIENTATION**	1
14	63463GT	AIR CLEANER,NELSON***	1
14-	58415GT	CLIP,AIR CLEANER END CAP*** end cap not available separately	
14-	62420GT	FILTER, AIR D2.9L4	
14-	65810GT	BAFFLE, AIR CLEANER (27915)**	
14-	52866GT	EVACUATOR VALVE-AIR CLEANER	
15		REF. BRACKET,LOWER RADIATOR (refer to 413.1)	
16	1277924GT	NUT,NYLOCK FLG,1/4-20,F,ZAG	2
17		REF. WELDMENT,ENGINE TRAY, 2.9L DEUTZ (refer to 417.1) (This part is used in multiple engine model applications)	
18	62476GT	SCREW,SHC,M10X1.5X20MM (75090)	6
19		REF.DRIVE PUMP AND FUNCTION PUMP (refer to 708.1)	
20	1253498GT	SCREW,HHF,1/2-13X1.5,8,ZAG	2
21	128003GT	COUPLER,15 TOOTH,FBA,PERKINS**	1
22	231530GT	SCREW,HHF,M10-1.5X25,DIN6921,0.9,ZAB	4
23	1258568GT	MOUNT,MUFFLER,PERKINS 404D-22T	1
24	70483GT	FORMING,8.5' MUFFLER MOUNT	2

414.1 Perkins 404D-22T Engine - View 2

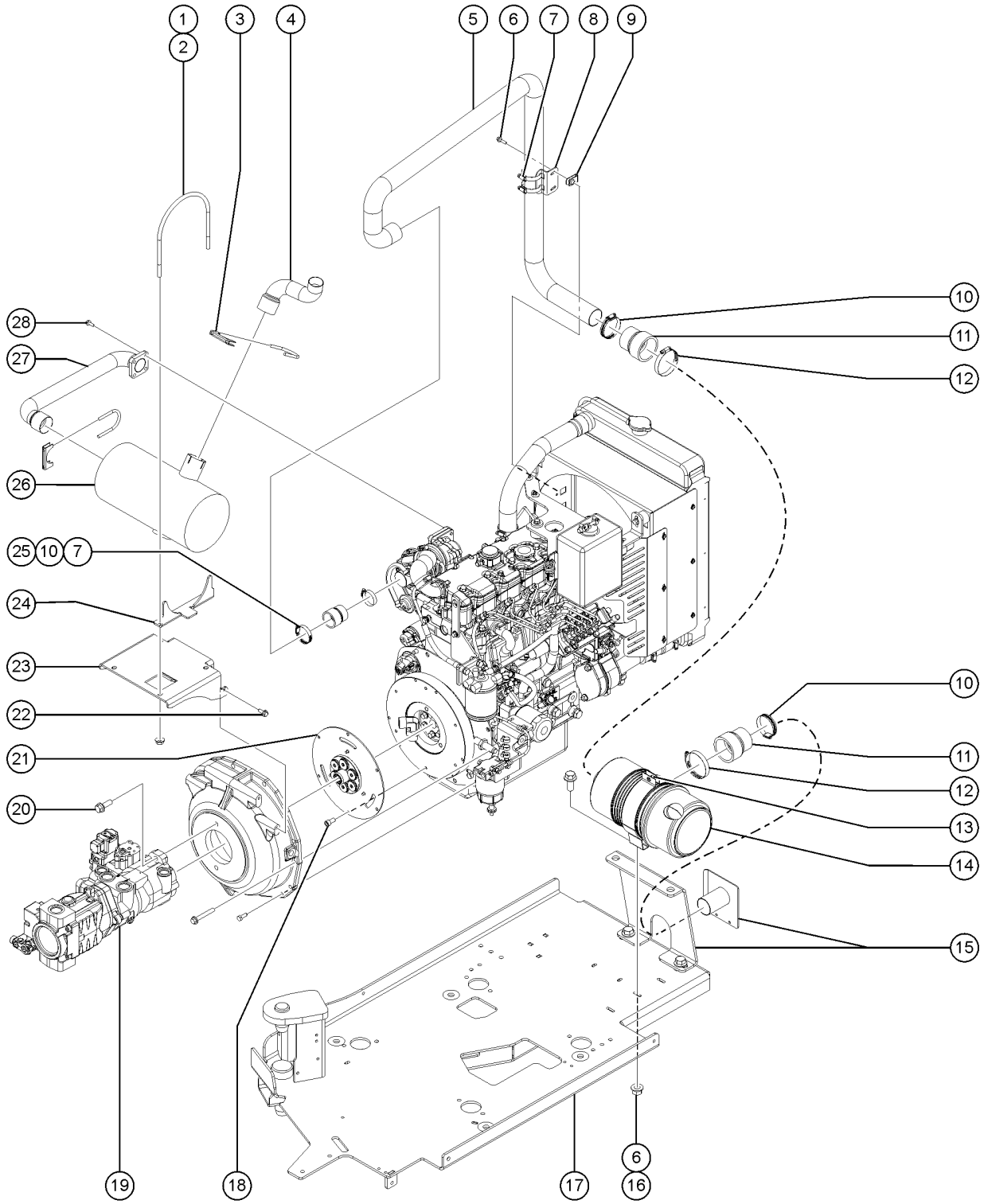

414.1 Perkins 404D-22T Engine - View 2

Item	Part No.	Description	Qty.
25	1253487GT	ADAPTER, 2" TO 1.8", PERK 404F	1
26	70444GT	MUFFLER,2.5"INLET/OUTLET	1
27	1257995GT	WELDMENT,EXHAUST PIPE,PERKINS	1
28	824133GT	SCREW,HHF,M8-1.25X25,DIN6921,10.9,ZAB	4

415.1 Perkins 404D-22T Engine - View 3

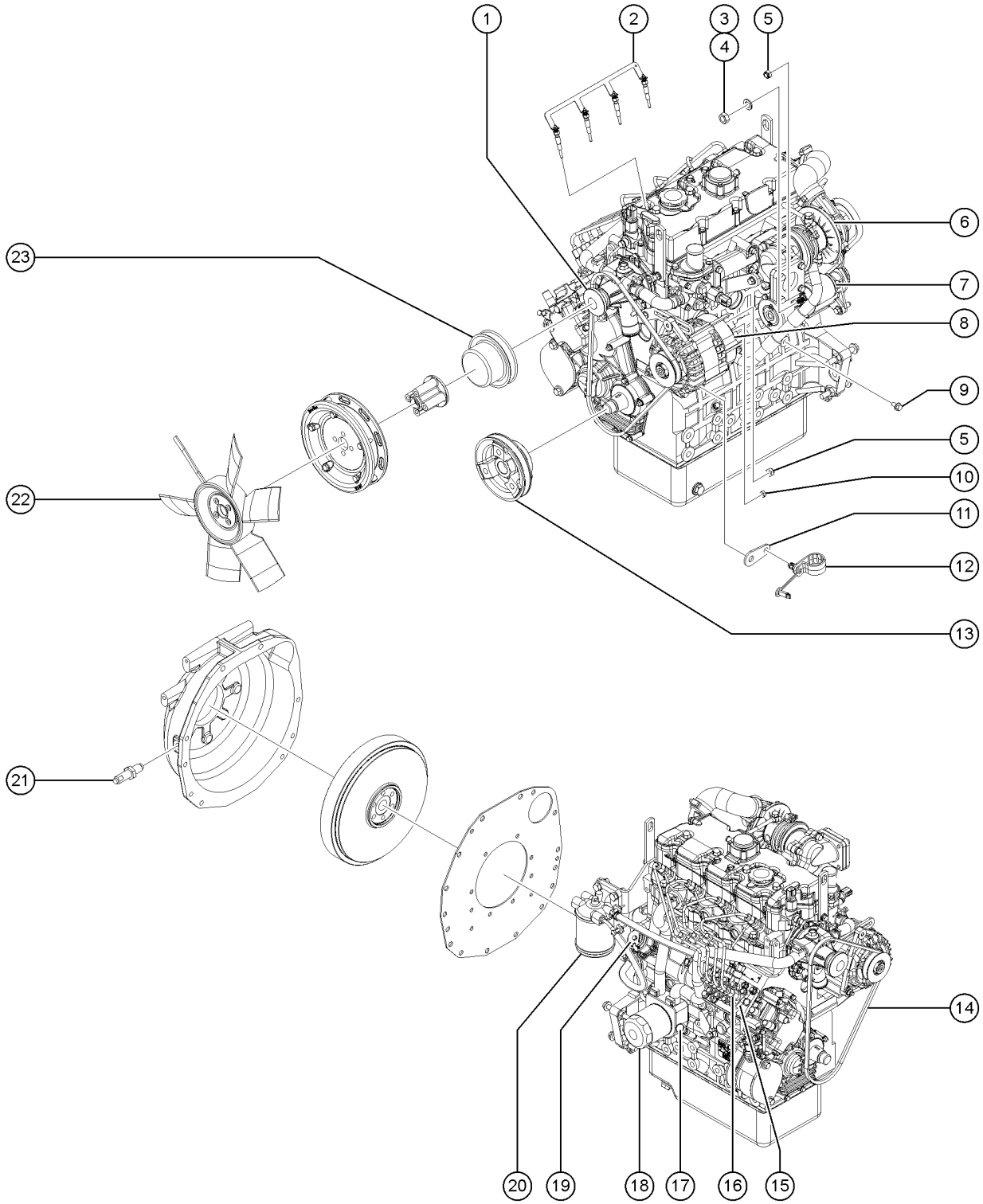

415.1 Perkins 404D-22T Engine - View 3

Item	Part No.	Description	Qty.
1	1262503GT	WATER PUMP,PERKINS 404D-22T	1
2	1262471GT	GLOWPLUG,ENGINE,PERKINS 404D/F	1
3	22571GT	NUT,HEX,M8 X 1.25	1
4	33277GT	WASHER,FLAT,M8,YELLOW ZINC	1
5	49364GT	NUT,NYLOCK,M6X1.00	2
6	1262022GT	TURBOCHARGER,PERKINS 404D-22T	1
7	1262585GT	STARTER MOTOR,PERKINS 404D	1
8	1262486GT	ALTERNATOR,PERKINS 404D/F-22T	1
9	1255806GT	SCREW,HHF,M12-1.75X20,DIN6921,10.9,ZAB	1
10	27082GT	NUT,NYLOCK,M5X.80	2
11	1259757GT	WIRE MANAGEMENT, WIRE LOOM SUP	1
12	121603GT	CLAMP,FIXED DIA.NYLON,.875"	1
13	1262494GT	CRANKSHAFT PULLEY,PERKIS 404D-	1
14	89765GT	BELT, V (PERKINS 404)	1
15	1261980GT	FUEL INJECTOR PUMP,PERKINS 404	1
16	1262017GT	ATOMISER (FUEL INJECTOR),PERKI	1
17	1262478GT	DIPSTICK,PERKINS 404D-22T	1
18	1262047GT	OIL FILTER,PERKINS 404D/F-22T	2
19	72348GT	PUMP,LIFT(FUEL) PERKINS(54555)	1
20	1262484GT	FUEL FILTER ASSY,PERKINS 404D/	1
21	1281137GT	ASSEMBLY, SPEED SENSOR	1
22	1252686GT	FAN,10 BLADE,17",PERKINS 404F-	1
23	1262050GT	WATER PUMP PULLEY,PERKINS 404D	1

416.1 Perkins 404D-22T Engine - View 4

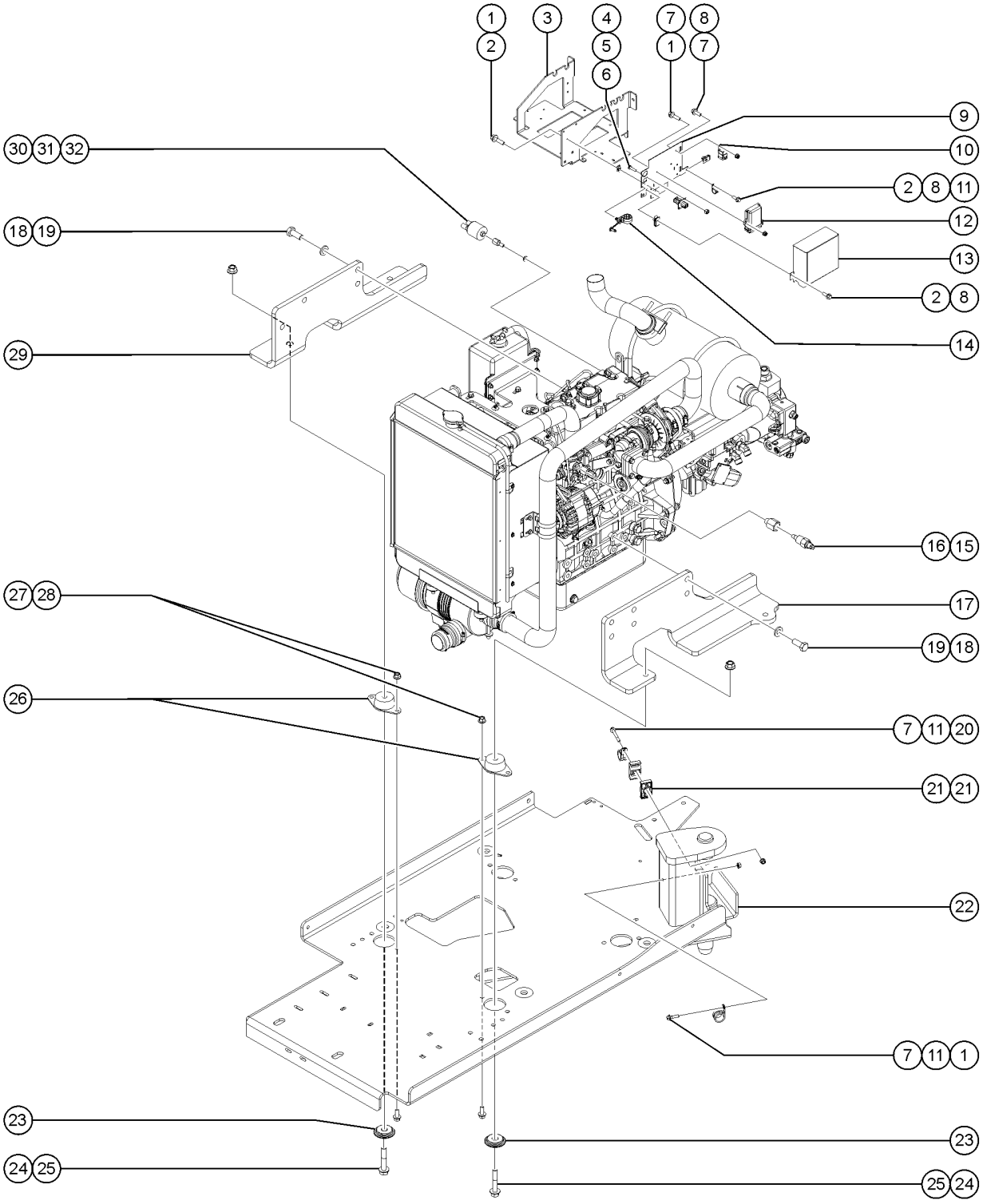

416.1 Perkins 404D-22T Engine - View 4

Item	Part No.	Description	Qty.
1	824079GT	SCREW,HHF,1/4-20X1,8,ZAG	6
2	56912GT	SPRING CLIP,1/4-20,.025-.15X.54,ZAG	5
3		REF. FORMING, BATTERY TRAY, XC (refer to 303.1)	
4	1253490GT	SCREW,PHPM,8-32 X .75,ZAG	2
5	73723GT	CONN RECEPT,FLANGED	1
6	1271081GT	NUT,NYLOCK,8-32,8,ZAG	2
7	1277924GT	NUT,NYLOCK FLG,1/4-20,F,ZAG	5
8	824078GT	SCREW,HHF,1/4-20X.75,8,ZAG	3
9	1279791GT	WELDMENT, ECU MOUNT, XC	1
10	60521GT	RELAY,SEALED 30/40 AMP	1
11	18666GT	CLAMP,1.00,#16 X 1/4,RUB CUSH	3
12	1262052GT	ENGINE CONTROL GOV,PERKINS 404	1
13	1274200GT	BRACKET,COVER, ECU, TIER IV	1
14	121603GT	CLAMP,FIXED DIA.NYLON,.875"	1
15	34058GT	SENDING UNIT,TMP,FRD,GM,PRK704	1
16	1260414GT	ADAPTER, BSPT3/8"-19 TO NPTF1/2-14	1
17	1253574GT	FORMING, ENGINE MOUNT, LH	1
18	1257705GT	SCREW,HHC,M14-1.5X35,DIN961,10	10
19	1257810GT	WASHER,FLAT,M14,DIN6916,HRD,ZAB	10
20	1257866GT	SCREW,HHF,1/4-20X2.25,8,ZAG	1
21	78736GT	CLAMP,2 HOSE,PLASTIC	2
22		REF. WELDMENT,ENGINE TRAY, 2.9L DEUTZ (refer to 417.1)	
23	102066GT	CASTING,WASHER,REBOUND	4
24	1257862GT	SCREW,HHF,1/2-13X2.75,8,ZAG	4
25	1274172GT	NUT,NYLOCK FLG,1/2-13,G,ZAG	4
26	70452GT	ISOLATOR,ENGINE VIBRATION	4
27	1274322GT	NUT,NYLOCK FLG,3/8-16,F,ZAG	8
28	824090GT	SCREW,HHF,3/8-16X1,8,ZAG	8

416.1 Perkins 404D-22T Engine - View 4

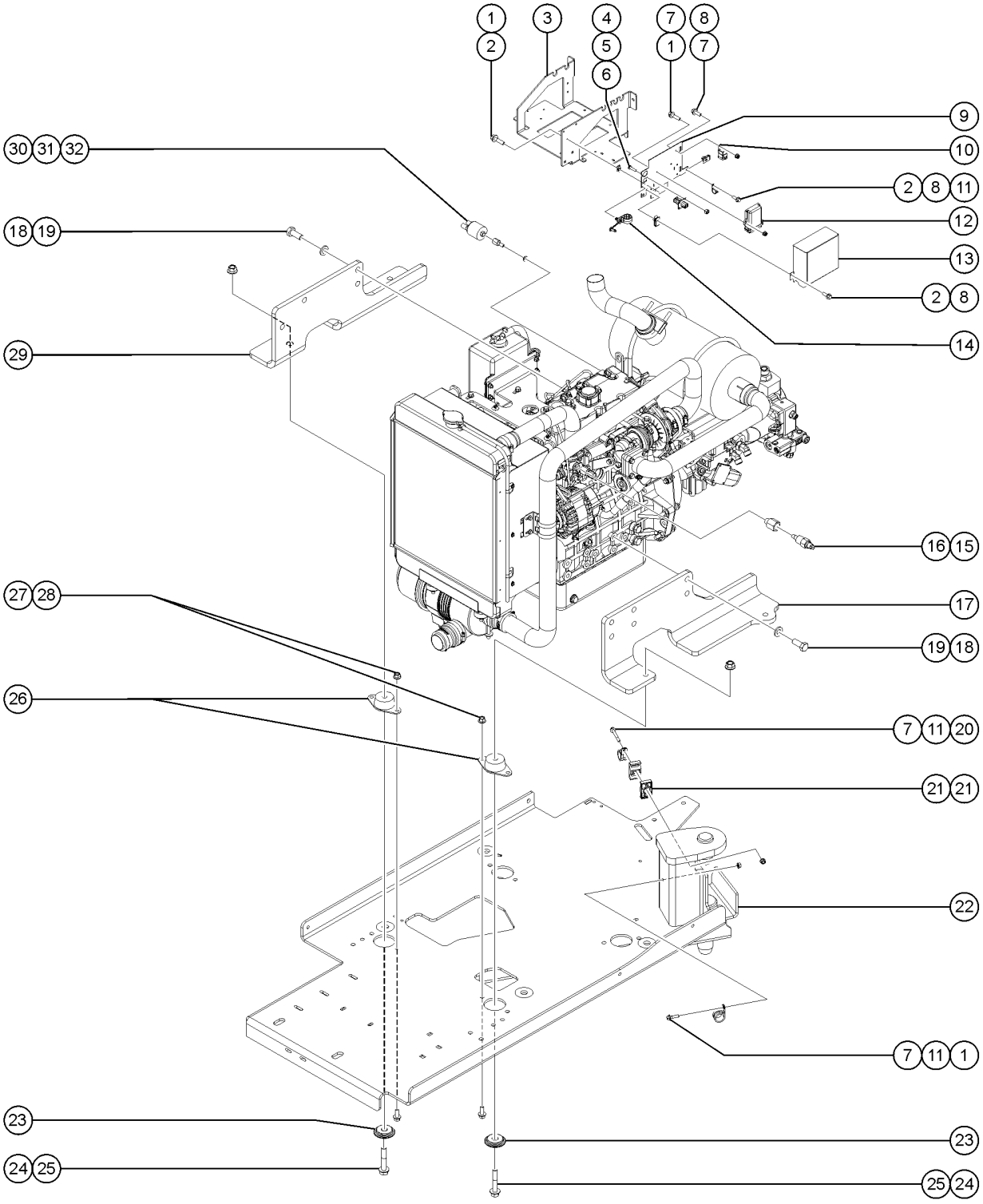

416.1 Perkins 404D-22T Engine - View 4

Item	*Part No.*	*Description*	*Qty.*
29	1253573GT	FORMING, ENGINE MOUNT, RH	1
30	102348GT	SENDING UNIT,OIL PRESS PERKINS	1
31	139936GT	ADAPTER,EYEBOLT	1
32	101085GT	GASKET	1

417.1 Engine Tray

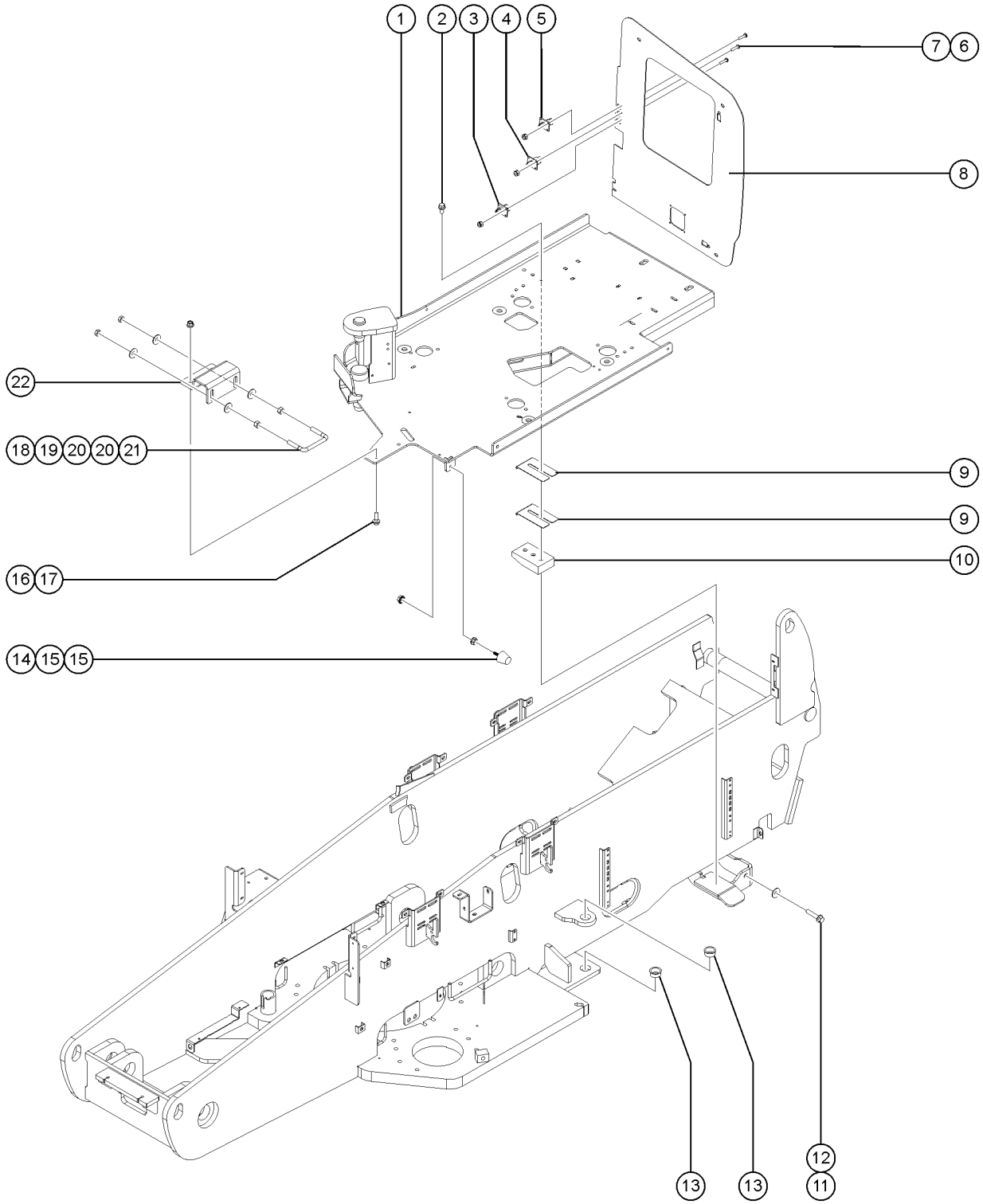

417.1 Engine Tray

Item	Part No.	Description	Qty.
1	1267074GT	WELDMENT,ENGINE TRAY (Deutz TD2011L04i)	1
1B	1267076GT	WELDMENT,ENGINE TRAY,2.9L DEUT (Deutz TD 2.9L4, GM 3.0L, Perkins 404F-E22TA and Perkins 404D-22T)	1
2	824089GT	SCREW, HHF, 3/8-16 X .75, 8, ZAG	2
3	73723GT	CONN RECEPT,FLANGED (GM 3.0L and Perkins 404D-22T)	1
4	75629GT	CONN,RECEP 3 WAY,W/FLANGE	1
5	1269704GT	CONNECTOR, RECEP, 2WAY, FL	1
6	1253490GT	SCREW,PHPM,8-32 X .75,ZAG	6
7	18605GT	NUT,NYLOCK,8-32	6
8	1270963GT	PLATE, BULKHEAD, DEUTZ 2.9L (Deutz TD 2.9L4)	1
8-	1298765GT	FORMING,BRKT,ENGINE SIDE COVER (Deutz TD 2.9L4)	
8-	824090GT	SCREW,HHF,3/8-16X1,8,ZAG for 1298765	
8-	1274322GT	NUT,NYLOCK FLG,3/8-16,F,ZAG for 1298765	
8B	1270964GT	PLATE, BULKHEAD, PERKINS 404F (Perkins 404D-22T)	1
8C	1272467GT	PLATE, BULKHEAD, GM 3.0L (GM 3.0L)	1
8D	1274053GT	PLATE, BULKHEAD, DEUTZ TD2011 (Deutz TD2011L04i)	1
9	34344GT	SHIM, PAD, 3 x 5	2
10	81522GT	WEAR PAD, ENGINE TRAY	1
11	1256126GT	SCREW,HHF,5/8-11X2,8,ZAG	1
12	824115GT	WASHER,FLAT,5/8,USS,ZAG	1
13	41858GT	BEARING,FL,1.51X1.75X.84LG	2
14	1261277GT	RUBBER BUMPER, 1.25 X 1.25 IN	1
15	1274167GT	NUT,NYLOCK FLG,5/16-18,F,ZAG	1
16	824091GT	SCREW, HHF, 3/8-16 X 1.25, 8, ZAG	2
17	1274322GT	NUT,NYLOCK FLG,3/8-16,F,ZAG	2
18	1259855GT	UBOLT, 0.4724 IN D X 4 IN L	1
19	1259106GT	NUT,1/2-13,8,ZAG	2
20	1255760GT	WASHER,FLAT,1/2,USS,ZAG	4
21	1255804GT	NUT,JAM,1/2-13,A,ZAG	2

417.1 Engine Tray

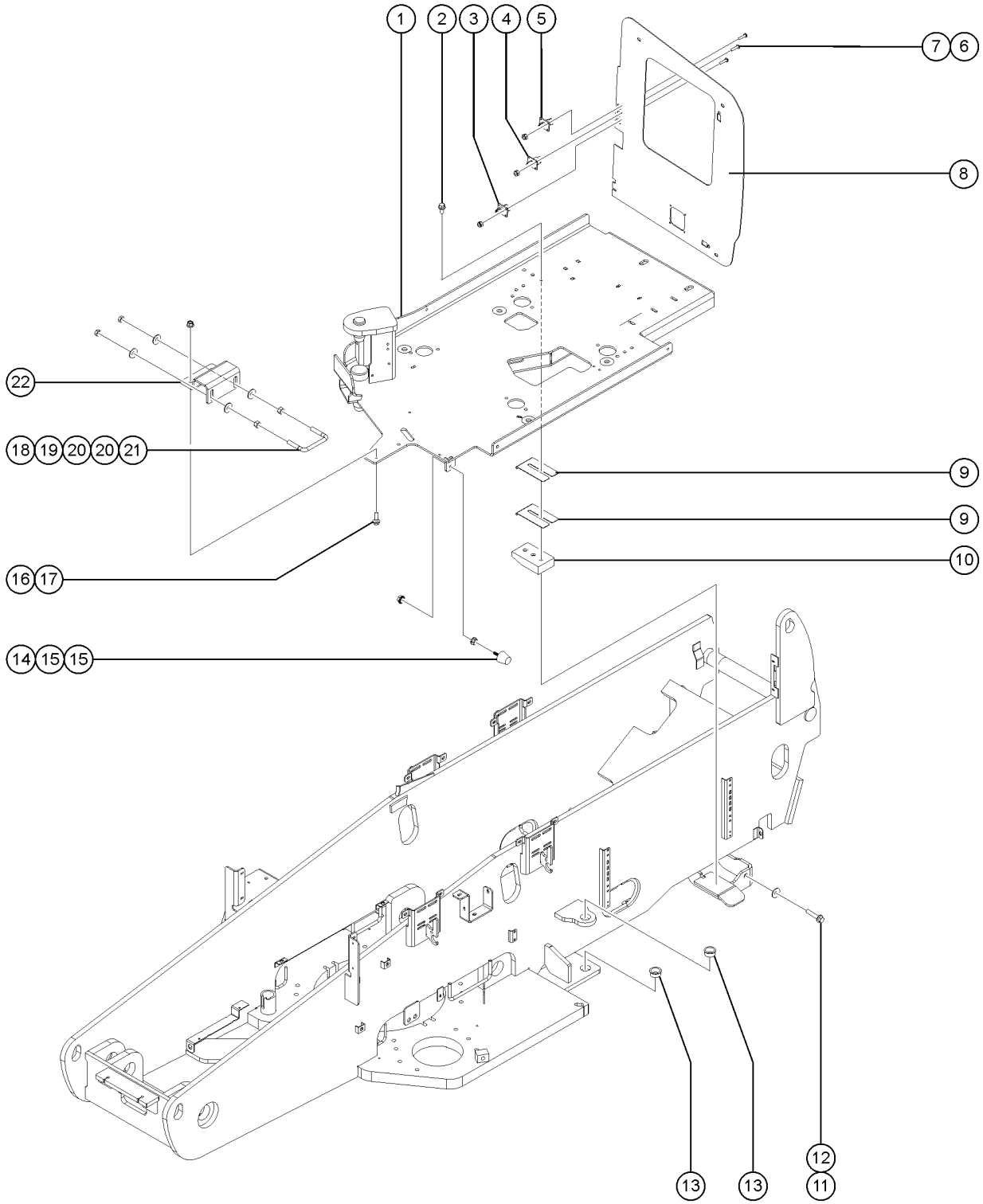

417.1 Engine Tray

Item	*Part No.*	*Description*	*Qty.*
22	1267070GT	FORMING,BRACKET,LATCH	1

418.1 Perkins 404F-E22TA Engine - View 1

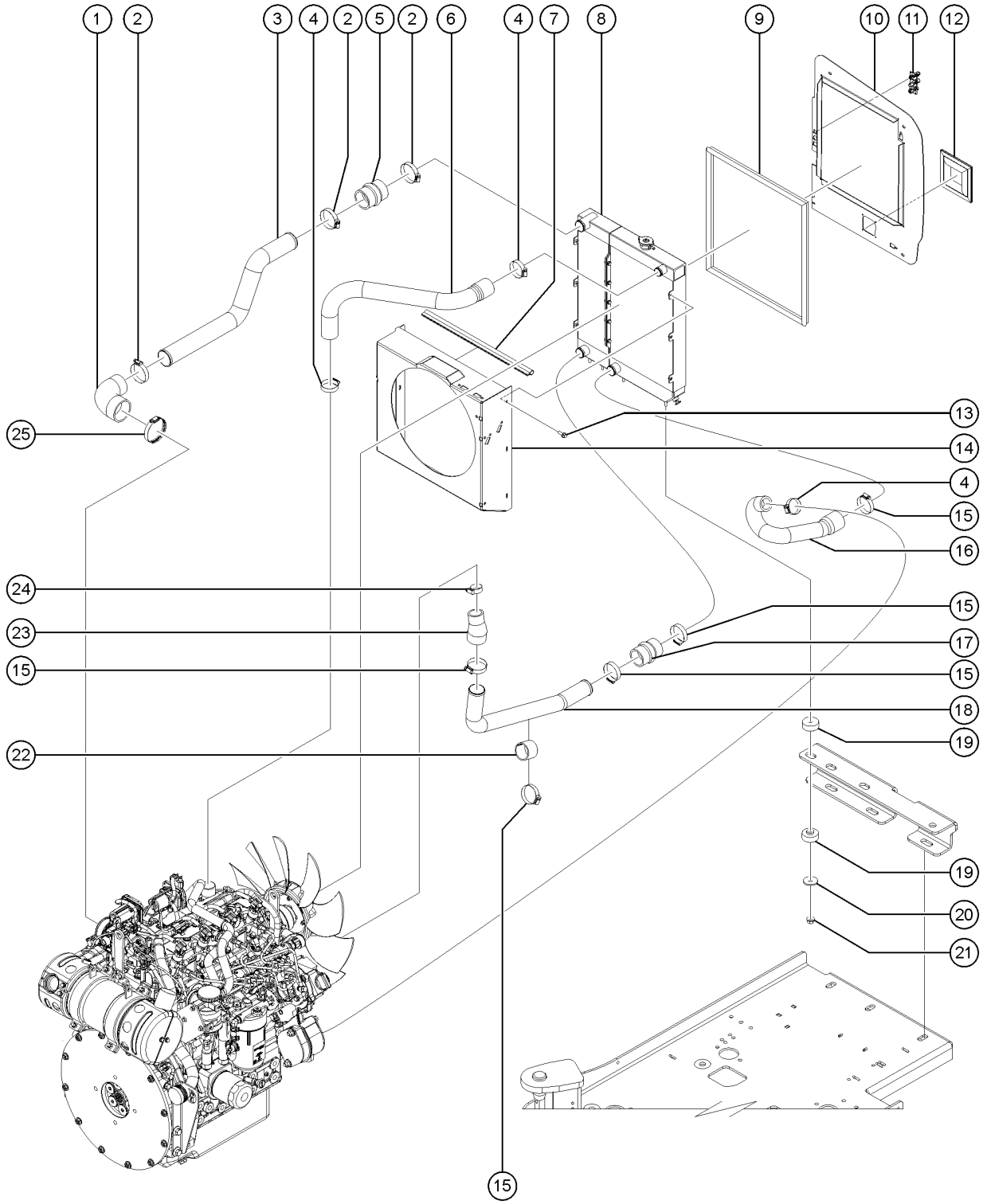

418.1 Perkins 404F-E22TA Engine - View 1

Item	Part No.	Description	Qty.
1	1285406GT	ADAPTER, ELBOW, 2IN X 2.4IN	1
2	35434GT	CLAMP,HOSE,2.00***	3
3	1285265GT	TUBE, AIR, CAC TO INTAKE	1
4	119053GT	CLAMP,HOSE,1.50	3
5	1285481GT	COUPLER, 2.00", HUMP, LT SILICONE, BLUE	1
6	1285269GT	HOSE, UPPER RADIATOR	1
7	119219GT	TRIM,EDGE,1/8X3/4 END BULB Qty. 2	23 inches
8	1285603GT	ASSEMBLY, COOLERS, CAC AND RAD	1
9	119219GT	TRIM,EDGE,1/8X3/4 END BULB	93 inches
10	1285632GT	FORMING, BULKHEAD, 404F-E22TA	1
11	1291404GT	ASSEMBLY, CONNECTOR PLUGS	1
11-	75629GT	CONN,RECEP 3 WAY,W/FLANGE	1
11-	1269704GT	CONNECTOR, RECEP, 2WAY, FL	1
11-	73723GT	CONN RECEPT,FLANGED	1
11-	119056GT	CONN, PLUG, 2 WAY, DEUTSCH, DT, ENDCAP	1
11-	119057GT	CONN, PLUG, 3 WAY, DEUTSCH, DT, ENDCAP	1
12	119219GT	TRIM,EDGE,1/8X3/4 END BULB	12 inches
13	824078GT	SCREW,HHF,1/4-20X.75,8,ZAG	6
14	1294251GT	WELDMENT, SHROUD, 404F-E22TA	1
15	22672GT	CLAMP,HOSE,1.75	5
16	1285270GT	HOSE, LOWER RADIATOR	1
17	1285480GT	COUPLER, 1.75", HUMP, HT SILICONE, RED	1
18	1285264GT	TUBE, AIR, TURBO TO CAC	1
19	24038GT	SHOCK MOUNT,SMALL	8
20	824120GT	WASHER, FLAT, .375 X 1.50 X .125, ZAG	4
21	1274322GT	NUT,NYLOCK FLG,3/8-16,F,ZAG	4

418.1 Perkins 404F-E22TA Engine - View 1

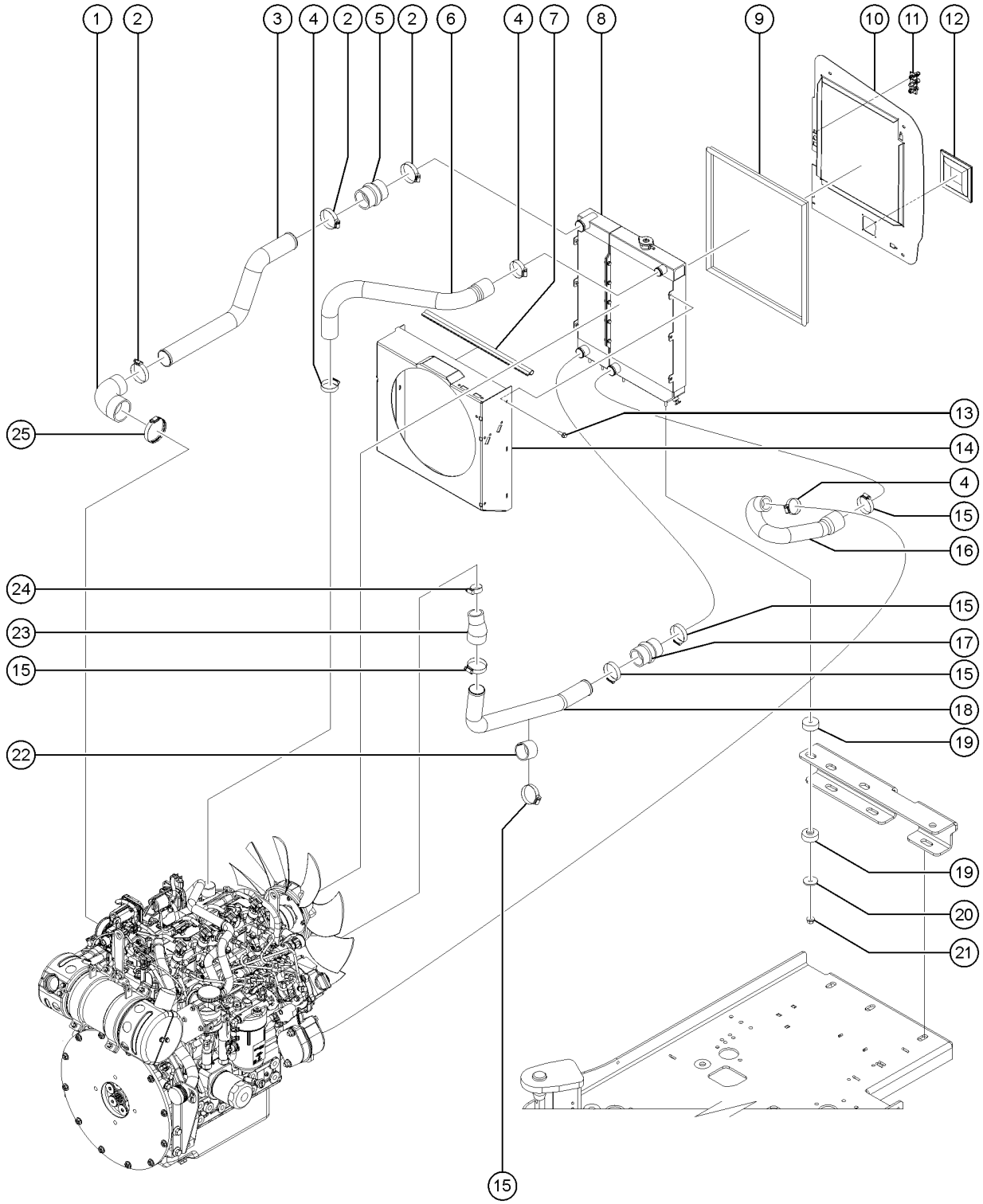

418.1 Perkins 404F-E22TA Engine - View 1

Item	Part No.	Description	Qty.
22	1287140GT	RUBBER, PIPE CUSHION	1
23	1285268GT	ADAPTER, TURBO OUTLET	1
24	36208GT	CLAMP,HOSE,1.25***	1
25	45435GT	CLAMP,HOSE,2.50"	1

419.1 Perkins 404F-E22TA Engine - View 2

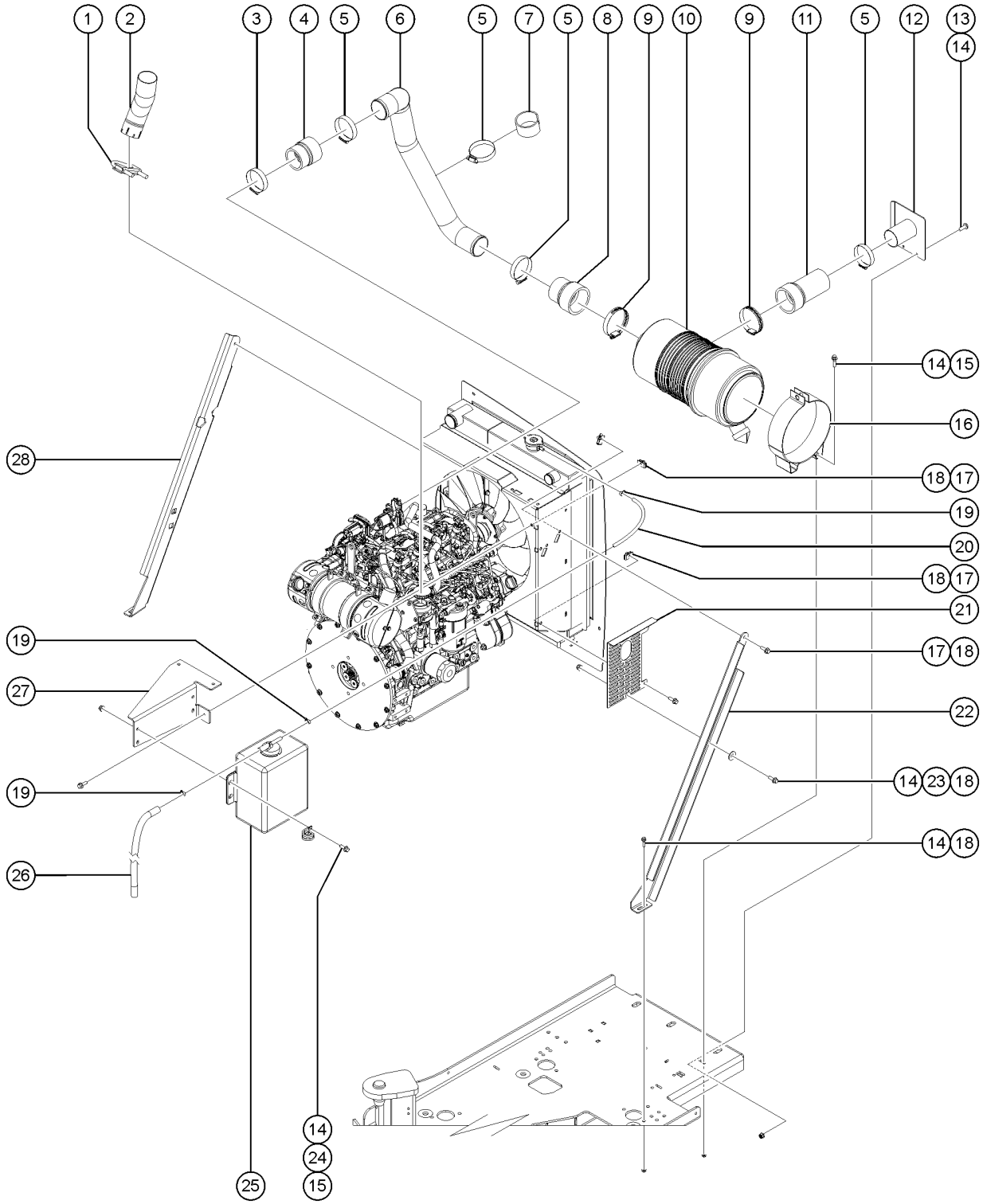

419.1 Perkins 404F-E22TA Engine - View 2

Item	Part No.	Description	Qty.
1	102121GT	CLAMP,MUFFLER,1-7/8 IN.	1
2	1287750GT	TUBE, TAILPIPE, 404F-E22TA, S80	1
3	22672GT	CLAMP,HOSE,1.75	1
4	1253487GT	ADAPTER, 2" TO 1.8", PERK 404F	1
5	35434GT	CLAMP,HOSE,2.00***	4
6	1285263GT	TUBE, AIR, CLEANER TO TURBO	1
7	1287140GT	RUBBER, PIPE CUSHION	1
8	216150GT	ADAPTER, AIR HOSE, PERK 404F	1
9	45435GT	CLAMP,HOSE,2.50"	2
10	63463GT	AIR CLEANER,NELSON***	1
10-	62420GT	FILTER, AIR D2.9L4	
10-	52866GT	EVACUATOR VALVE-AIR CLEANER	
11	1286204GT	ADAPTER, AIR CLEANER, 2.50 X 2.00	1
12	1253431GT	WELDMENT,INTAKE,PERKINS 404F-	1
13	1260984GT	SCREW,PHPM,1/4-20X.75,ZAG	2
14	1277924GT	NUT,NYLOCK FLG,1/4-20,F,ZAG	11
15	824079GT	SCREW,HHF,1/4-20X1,8,ZAG	6
16	53952GT	BRKT,AIR CLEANER ORIENTATION**	1
17	56912GT	SPRING CLIP,1/4-20,.025-.15X.54,ZAG	8
18	824078GT	SCREW,HHF,1/4-20X.75,8,ZAG	11
19	21465GT	CLAMP,HOSE, .25" TO .63" X .3125"	3
20	1294296GT	HOSE, HEATER, 1/4", S/Z80, PERKINS	1
21	1289890GT	FORMING, FAN GUARD, 404F-E22TA	1
22	1286205GT	FORMING, STRUT, COOLER, SUPPORT	1
23	824113GT	WASHER,FLAT,USS,1/4,ZAG	1
24	13268GT	CLAMP,0.75,#12 X 1/4,RUB CUSH	1
25	70367GT	BOTTLE,COOLANT RECOVERY,3.7***	1
26	106226GT	TUBING,VINYL,1/2" CLEAR	1

419.1 Perkins 404F-E22TA Engine - View 2

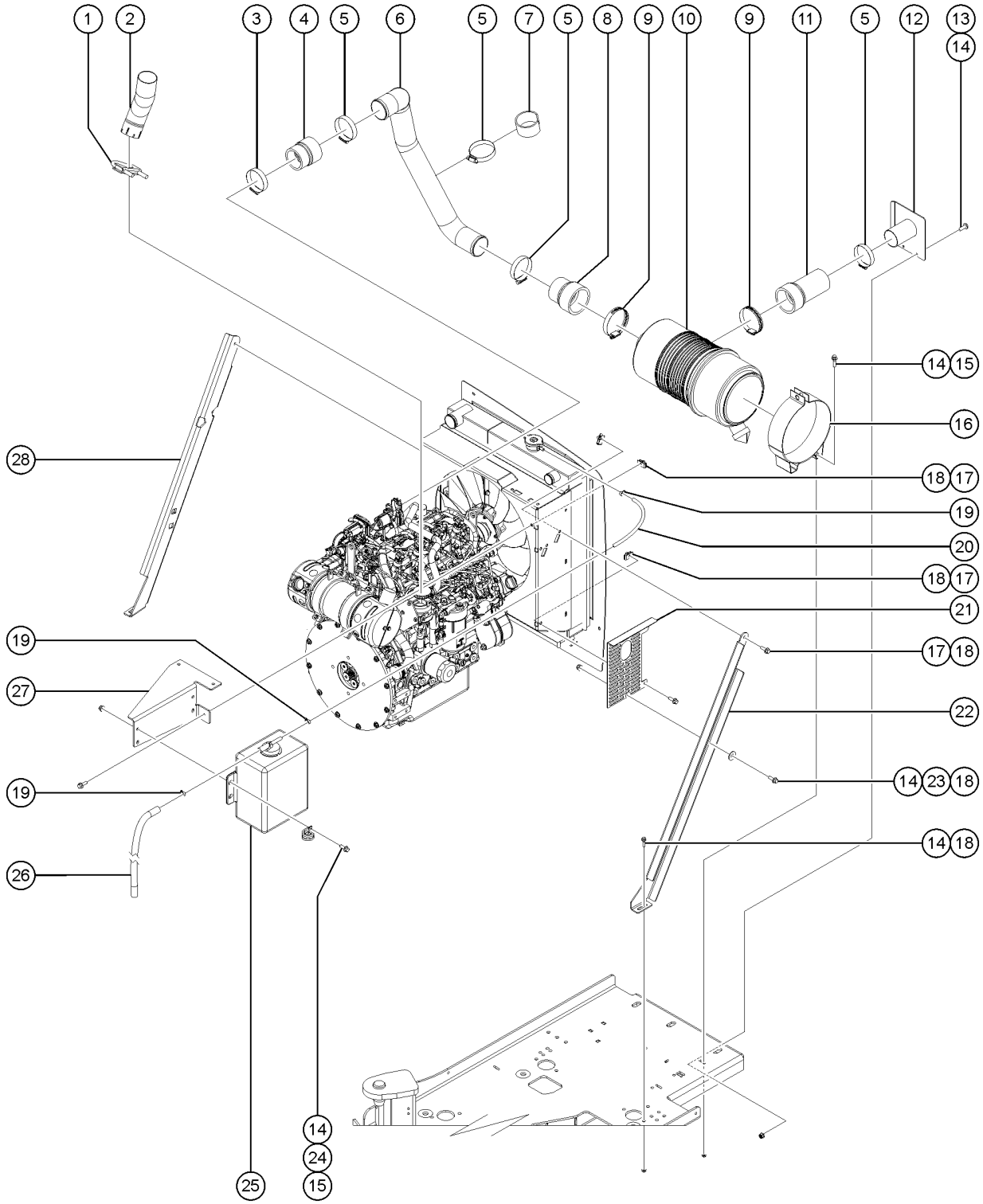

419.1 Perkins 404F-E22TA Engine - View 2

Item	*Part No.*	*Description*	*Qty.*
27	1286206GT	FORMING, OVERFLOW BOTTLE MOUNT	1
28	1285267GT	FORMING, STRUT, COOLER SUPPORT, LEFT	1

420.1 Perkins 404F-E22TA Engine - View 3

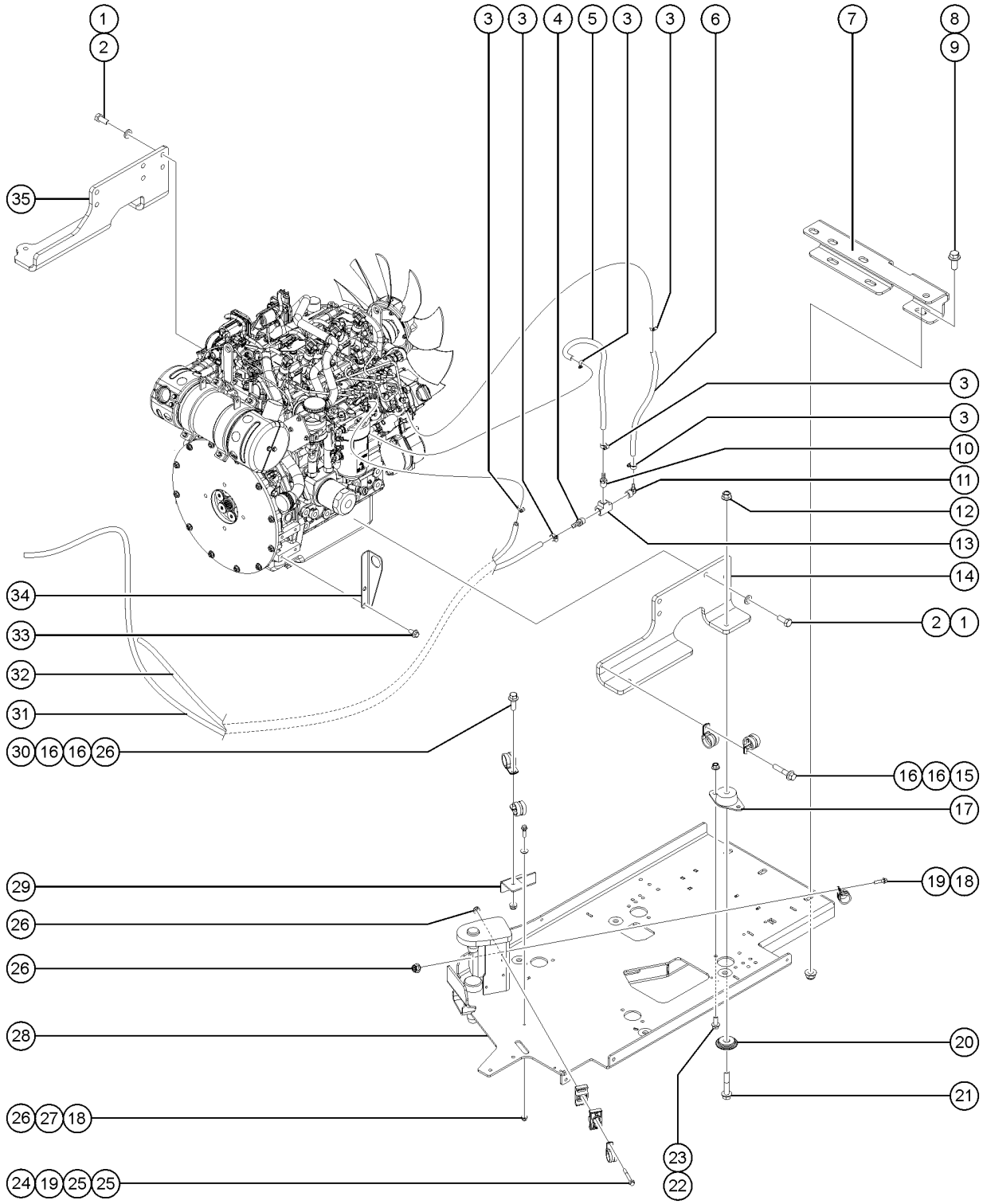

420.1 Perkins 404F-E22TA Engine - View 3

Item	Part No.	Description	Qty.
1	1257705GT	SCREW,HHC,M14-1.5X35,DIN961,10	10
2	1257810GT	WASHER,FLAT,M14,DIN6916,HRD,ZAB	10
3	21465GT	CLAMP,HOSE, .25" TO .63" X .3125"	6
4	27901GT	HOSE END,BARBED,RIGID,-6-6	1
5	1290920GT	HOSE, FUEL, 5/16, MAIN FILTER RELIF TO T	1
6	1290921GT	HOSE, FUEL, 1/4, INJECTOR DRAIN TO T	1
7	1285266GT	FORMING, COOLER MOUNT	1
8	1253208GT	SCREW,HHF,5/8-11X1.5,8,ZAG	3
9	1283007GT	NUT,NYLOCK FLG,5/8-11,F,ZAG	3
10	54124GT	HOSE END,BARB,3/8 MNPT X 5/16	1
11	824874GT	FITTING,3/8NPT TO 1/4BARB,90	1
12	1274172GT	NUT,NYLOCK FLG,1/2-13,G,ZAG	4
13	1287879GT	FITTING, TEE, 3/8 FEMALE NPT	1
14	1253573GT	FORMING, ENGINE MOUNT, RH	1
15	824080GT	SCREW, HHF, 1/4-20 X 1.25, 8, ZAG	1
16	16073GT	CLAMP,0.63,#10 X 1/4,RUB CUSH	4
17	70452GT	ISOLATOR,ENGINE VIBRATION	4
18	824079GT	SCREW,HHF,1/4-20X1,8,ZAG	2
19	18666GT	CLAMP,1.00,#16 X 1/4,RUB CUSH	2
20	102066GT	CASTING,WASHER,REBOUND	4
21	1257862GT	SCREW,HHF,1/2-13X2.75,8,ZAG	4
22	824090GT	SCREW,HHF,3/8-16X1,8,ZAG	8
23	1274322GT	NUT,NYLOCK FLG,3/8-16,F,ZAG	8
24	1257866GT	SCREW,HHF,1/4-20X2.25,8,ZAG	1
25	78736GT	CLAMP,2 HOSE,PLASTIC	2
26	1277924GT	NUT,NYLOCK FLG,1/4-20,F,ZAG	4
27	824113GT	WASHER,FLAT,USS,1/4,ZAG	1
28	1267076GT	WELDMENT,ENGINE TRAY,2.9L DEUT (refer to 417.1)	1

420.1 Perkins 404F-E22TA Engine - View 3

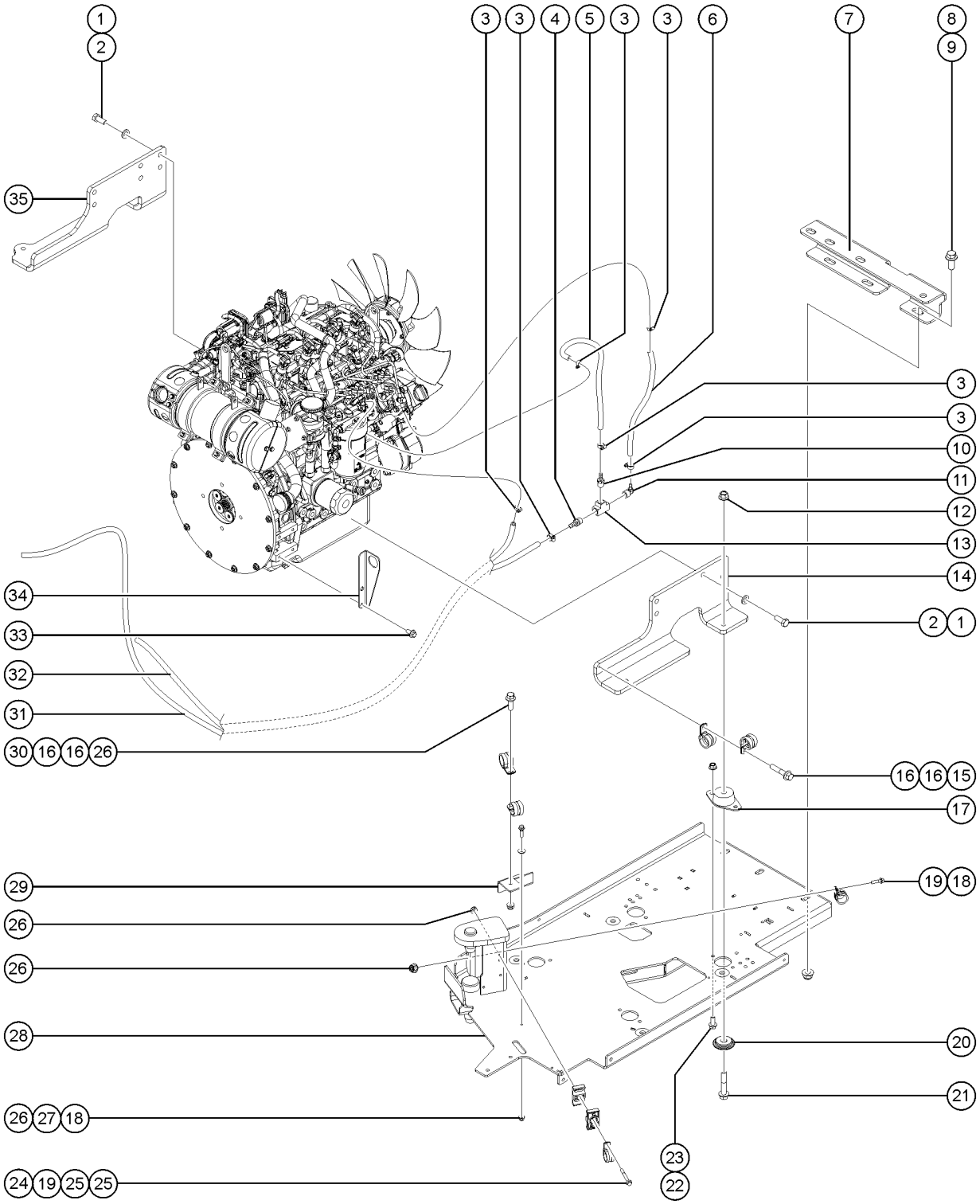

420.1 Perkins 404F-E22TA Engine - View 3

Item	Part No.	Description	Qty.
29	1288215GT	FORMING, BRACKET, FUEL, LINE SUPPORT	1
30	824078GT	SCREW,HHF,1/4-20X.75,8,ZAG	1
31	1290922GT	HOSE, FUEL, 3/8, T TO TANK	1
32	1290919GT	HOSE, FUEL, 5/16, ELP, TO MAIN FILTER	1
33	231087GT	SCREW,HHF,M12-1.75X25,DIN6921,10.9,ZAB	2
34	1286546GT	ECU HARNESS BRACKET, PERKINS 404F-E22T	1
35	1253574GT	FORMING, ENGINE MOUNT, LH	1

421.1 Perkins 404F-E22TA Engine - View 4

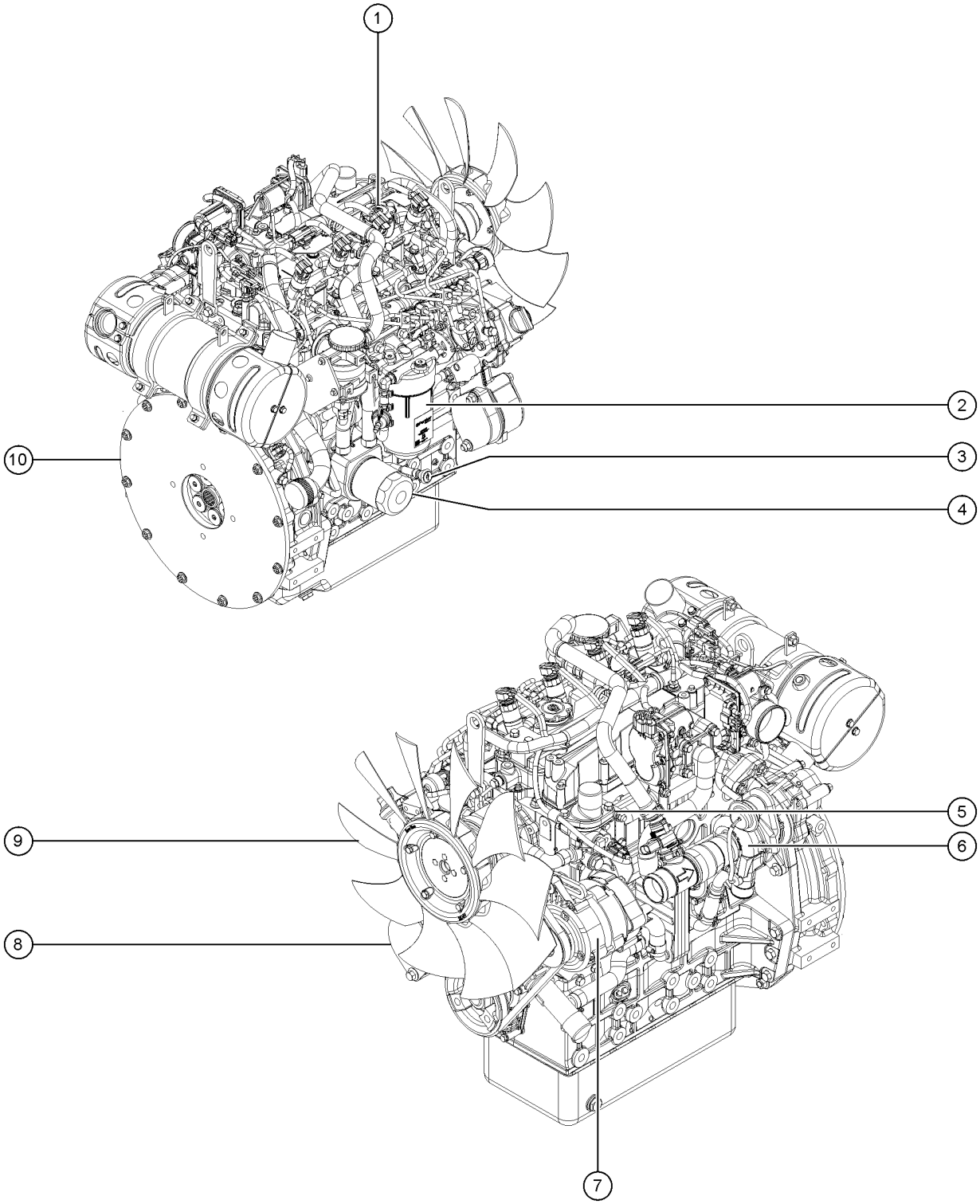

421.1 Perkins 404F-E22TA Engine - View 4

Item	Part No.	Description	Qty.
-	1297341GT	SWITCH, PRESSURE, OIL, PERKINS	1
-	1297342GT	SUMP, OIL, PERKINS	1
-	1297343GT	SENSOR, TEMPERATURE, WATER, PERKINS	1
-	1297344GT	MANIFOLD, INTAKE, PERKINS	1
-	1297345GT	MANIFOLD, EXHAUST, PERKINS	1
-	1251819GT	GASKET,EXHAUST MANIFOLD,PERK	1
-	1297348GT	PUMP, PRESSURE, PERKINS	1
-	1291207GT	INJECTOR, PERKINS	1
-	1291208GT	TURBOCHARGER, 67HP, PERKINS	1
-	1291210GT	GLOW PLUGS, PERKINS	1
-	1297351GT	PUMP, INJECTOR, PERKINS	1
1	65636GT	CAP, OIL FILLER	1
1-	65638GT	SEAL, OIL FILLER CAP	1
2	1291205GT	FILTER, PRIMARY, FUEL, PERKINS	1
2-	1297346GT	ASSEMBLY, PREFILTER, FUEL, PERKINS	1
3	1297340GT	DIPSTICK, PERKINS	1
4	94762GT	OIL FILTER - PERKINS	1
5	128991GT	THERMOSTAT	1
6	1252940GT	STARTER,PERKINS 404F	1
7	1251814GT	ALTERNATOR - 85 AMP, INT REGU	1
7-	1297349GT	BRACKET, ALTERNATOR, PERKINS	1
8	1252942GT	PUMP,WATER,PERKINS 404F	1
8-	77482GT	PULLEY, WATER PUMP	1
9	1252686GT	FAN,10 BLADE,17",PERKINS 404F-	1
9-	1291206GT	BELT, FAN, PERKINS	1
9-	1297350GT	PULLEY, FAN, PERKINS	1
10	1297339GT	GEAR, RING, FLYWHEEL\STARTER, PERKINS	1

501.1 Cable Track Installation

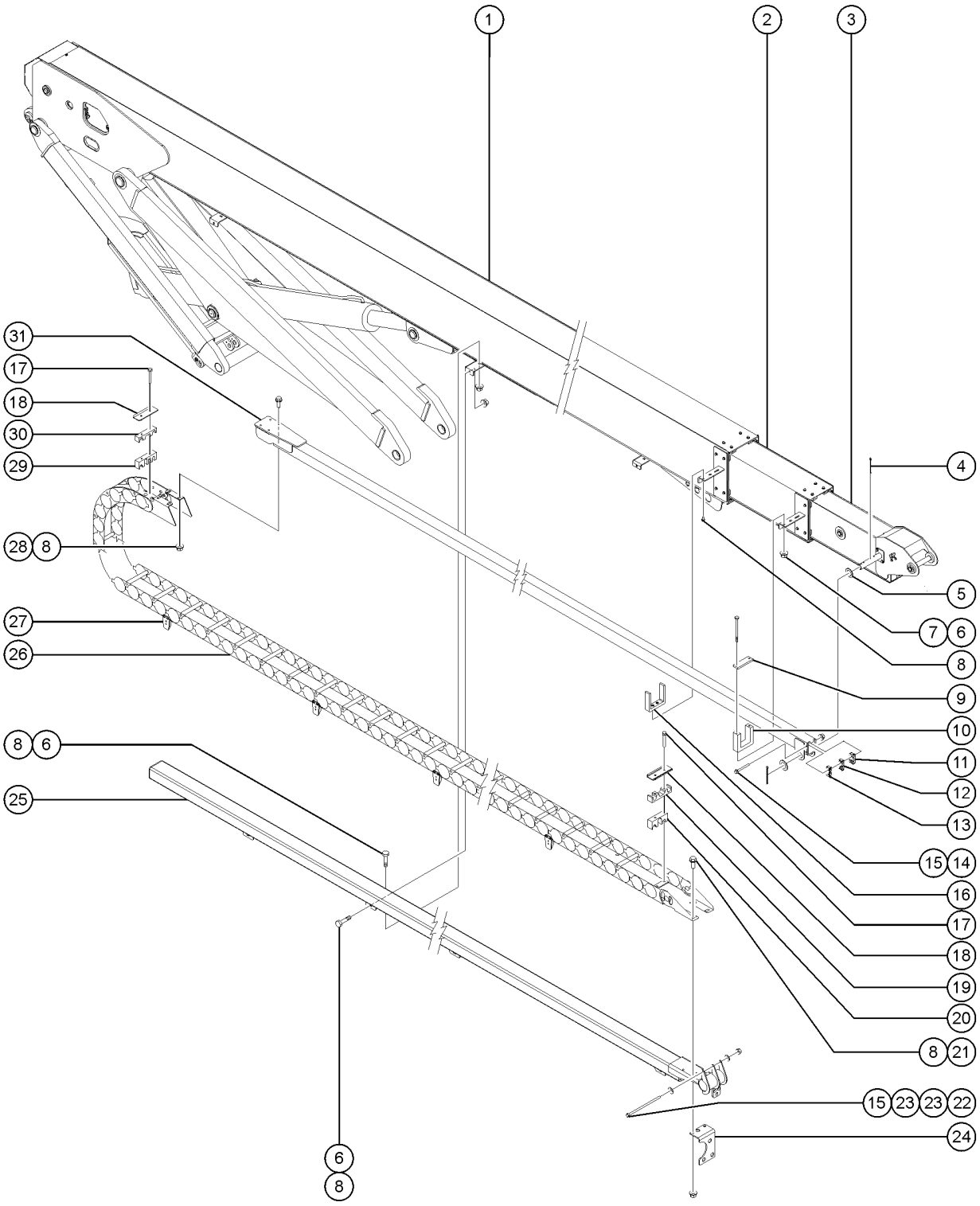

Item	Part No.	Description	Qty.
1		REF. BOOM NUMBER 1 (refer to 502.1)	1
2		REF. BOOM NUMBER 2 (refer to 503.1)	1
3		REF. BOOM NUMBER 3 (refer to 504.1)	1
4	42079GT	PIN,COTTER,.156 X 2.5	2
5	1251565GT	WASHER,SHIM,1.56X2.5X.061,ZAG	2
6	1274322GT	NUT,NYLOCK FLG,3/8-16,F,ZAG	12
7	1255391GT	SCREW,HHC,3/8-16X7,8,ZAG	2
8	824090GT	SCREW,HHF,3/8-16X1,8,ZAG	20
9	81342GT	WEAR PAD,5.5 X 1.75 X .5	1
10	81341GT	WEAR PAD,CABLE TRACK PULL TUBE	1
11	1288009GT	CLAMP, PULL TUBE, RIGHT, OPTIONS	1
12	1288010GT	CLAMP, PULL TUBE, CENTER	1
12-	T115764GT	CLAMP,PULL TUBE,RIGHT,WK LT (worklight option)	1
13	1288011GT	CLAMP, PULL TUBE, LEFT	1
13-	T115763GT	CLAMP,PULL TUBE,LEFT,WK LT (worklight option)	1
14	1257867GT	SCREW,HHF,1/4-20X3.5,8,ZAG	2
15	1277924GT	NUT,NYLOCK FLG,1/4-20,F,ZAG	3
16	81340GT	WEAR PAD ASSEMBLY,CABLE TRACK	1
17	1256123GT	SCREW,HHC,1/4-20X3.25,8,ZAG	4
17-	1271993GT	SCREW, HHC, 1/4-20 X 3.75,GR8,ZAG (Welder and Air Line options)	4
18	121065GT	FORMING,CLAMP,TOP,CABLE TRACK	2
19	1283306GT	CLAMP, OPTIONS, CABLE TRACK	1
20	1288012GT	CLAMP, CABLE TRACK	1
21	824091GT	SCREW, HHF, 3/8-16 X 1.25, 8, ZAG	2
22	1268605GT	SCREW,HHC,1/4-20X6,8,ZAG	1
23	824113GT	WASHER,FLAT,USS,1/4,ZAG	2
24	1283938GT	FORMING,ARCTIC KIT,BULKHEAD	1
25	1283383GT	WELDMENT,CABLE TRACK TRAY	1

501.1 Cable Track Installation

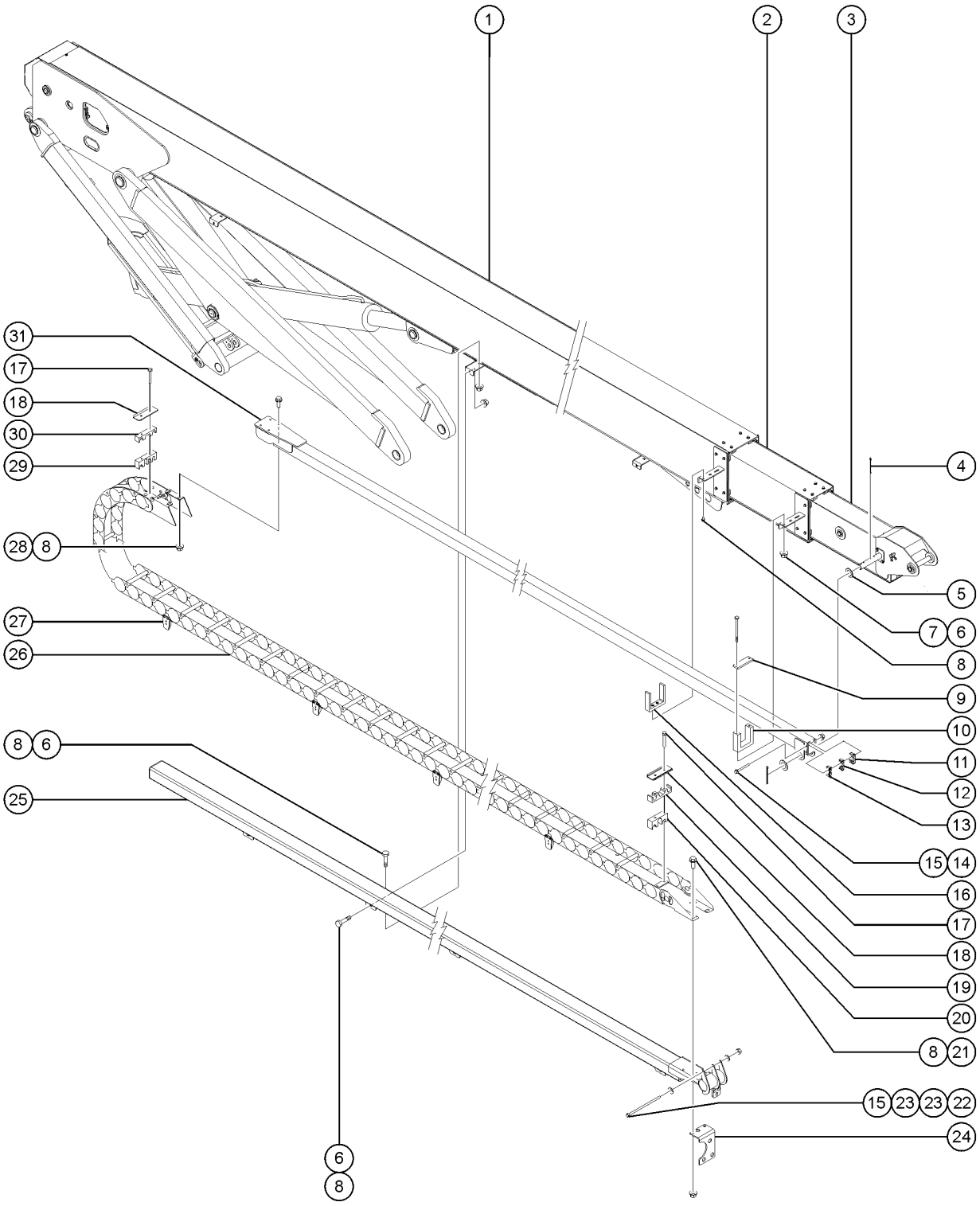

Item	Part No.	Description	Qty.
26	121064GT	CABLE TRACK,SX,70 LNK (Include items 18 & 28)	1
26-	122661GT	REPAIR KIT,4 LINK,W/GUIDE	
26-	122662GT	END BRACKET,MOVING END	
26-	122663GT	END BRACKET,FIXED END	
26-	122664GT	ALUMINUM FLAT CROSS BAR	
26-	122665GT	FLAT BAR W/PEM NUTS	
26-	122666GT	SEPERATOR,PLASTIC	
27	218448GT	FINGER,GUIDE,CABLE TRACK	16
27-	122668GT	GUIDE FINGER,PLASTIC	
27-	87085GT	RIVET,ALUM,P,.188 X .25	
28	1274322GT	NUT,NYLOCK FLG,3/8-16,F,ZAG	6
29	1283304GT	CLAMP,CABLE TRACK,WK LT	1
30	1288013GT	CLAMP, CABLE TRACK, OPTIONS	1
31	121063GT	WELDMENT,LONG,GUIDE TUBE	1

502.1 Extension Boom Tube 1 (to SN S85XCH-4384)

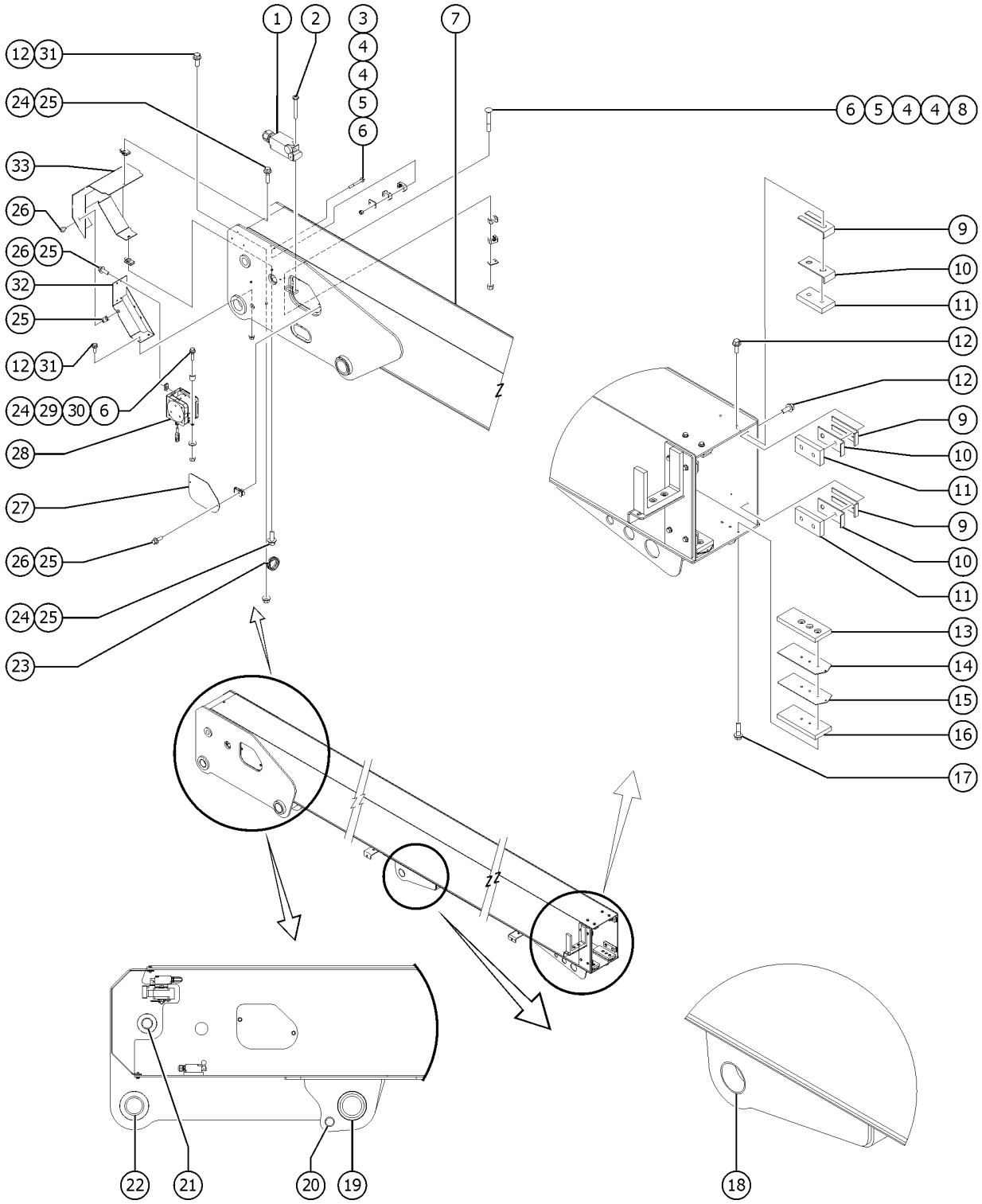

502.1 Extension Boom Tube 1 (to SN S85XCH-4384)

Item	Part No.	Description	Qty.
1		REF. LIMIT SWITCH LSB1RS (Boom Retract Limit Switch) (refer to 316.1 and 317.1)	1
2	824216GT	SCREW, PHPM, 10-32 X 1.5, ZAG	2
3	824083GT	SCREW,HHF,1/4-20X2.5,8,ZAG	2
4	117310GT	CLAMP HALF SET,SINGLE,5/8"TUBE	4
5	117312GT	CLAMP CVR PLATE,SINGLE,GRP 2	2
6	1274165GT	NUT,NYLOCK,1/4-20,C,ZAG	5
7	1273660GT	ASSEMBLY,BOOM #1 includes bearings	1
8	1255797GT	BOLT,CARRIAGE,1/4-20X2,5,ZAG	2
9	1276017GT	SHIM,WEAR PAD,7 X 1.5,16GA	6
10	1276018GT	SHIM,WEAR PAD,7 X 1.5,14GA	6
11	1273674GT	WEAR PAD,7 X 1.5 X .875 W/INSERT	6
12	824090GT	SCREW,HHF,3/8-16X1,8,ZAG	15
13	1276021GT	WEAR PAD,7 X 3 X .625 W/INSERT	2
14	60304GT	SHIM,WEAR PAD,7 X 3,12GA	2
15	60840GT	SHIM,WEAR PAD,7 X 3,16GA	2
16	121164GT	BAR,SPACER	2
17	824092GT	SCREW, HHF, 3/8-16 X 1.5, 8, ZAG	4
18	27697GT	BEARING,2.50IDX2.75ODX1.50L	2
19	121754GT	BEARING,3.00IDX3.50DX2.25LG	2
20	119619GT	BEARING,1.5 ID X 1.75 ODX1.5L	1
21	110876GT	BEARING,1.5"ID X 1.75OD X1.25L	2
22	101559GT	BEARING,FL,2.50IDX2.75ODX1.61L	2
23	61745GT	CLAMP,2.25,#36 X 3/8,RUB CUSH	1
24	824079GT	SCREW,HHF,1/4-20X1,8,ZAG	3
25	56912GT	SPRING CLIP,1/4-20,.025-.15X.54,ZAG	11
26	824078GT	SCREW,HHF,1/4-20X.75,8,ZAG	9
27	121029GT	COVER PLATE,BOOM	2
28	1278666GT	LENGTH TRANSDUCER, 400 IN, CAN ID 47	1

502.1 Extension Boom Tube 1 (to SN S85XCH-4384)

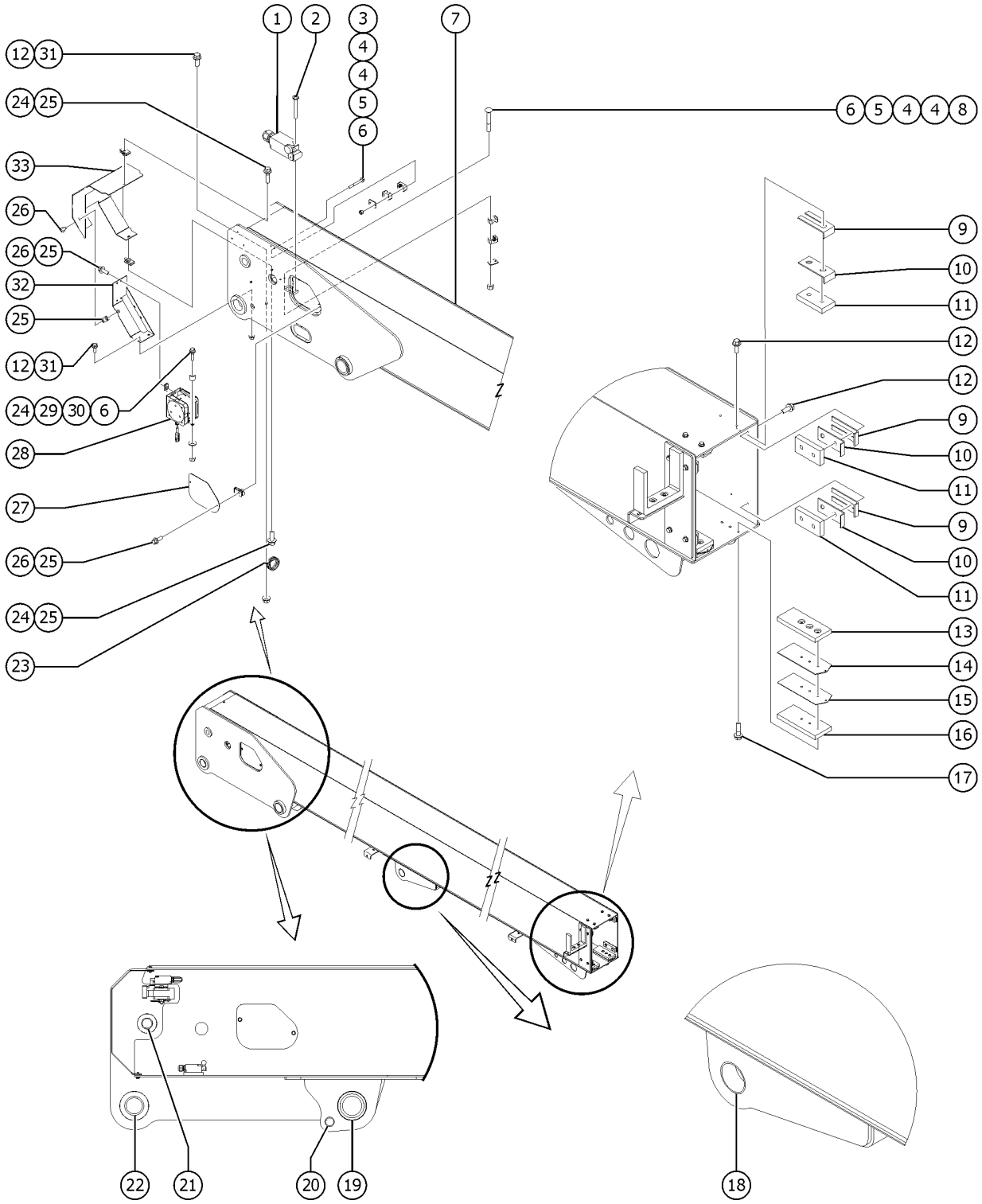

502.1 Extension Boom Tube 1 (to SN S85XCH-4384)

Item	*Part No.*	*Description*	*Qty.*
29	35732GT	SPACER,TUBE,1/4 X 3/8 **	1
30	824113GT	WASHER,FLAT,USS,1/4,ZAG	1
31	1274322GT	NUT,NYLOCK FLG,3/8-16,F,ZAG	3
32	1274633GT	WELDMENT, STRING POT MOUNT	1
33	1277597GT	WELDMENT, COVER, PRIMARY BOOM	1

502.2 Extension Boom Tube 1 (from SN S85XCH-4385)

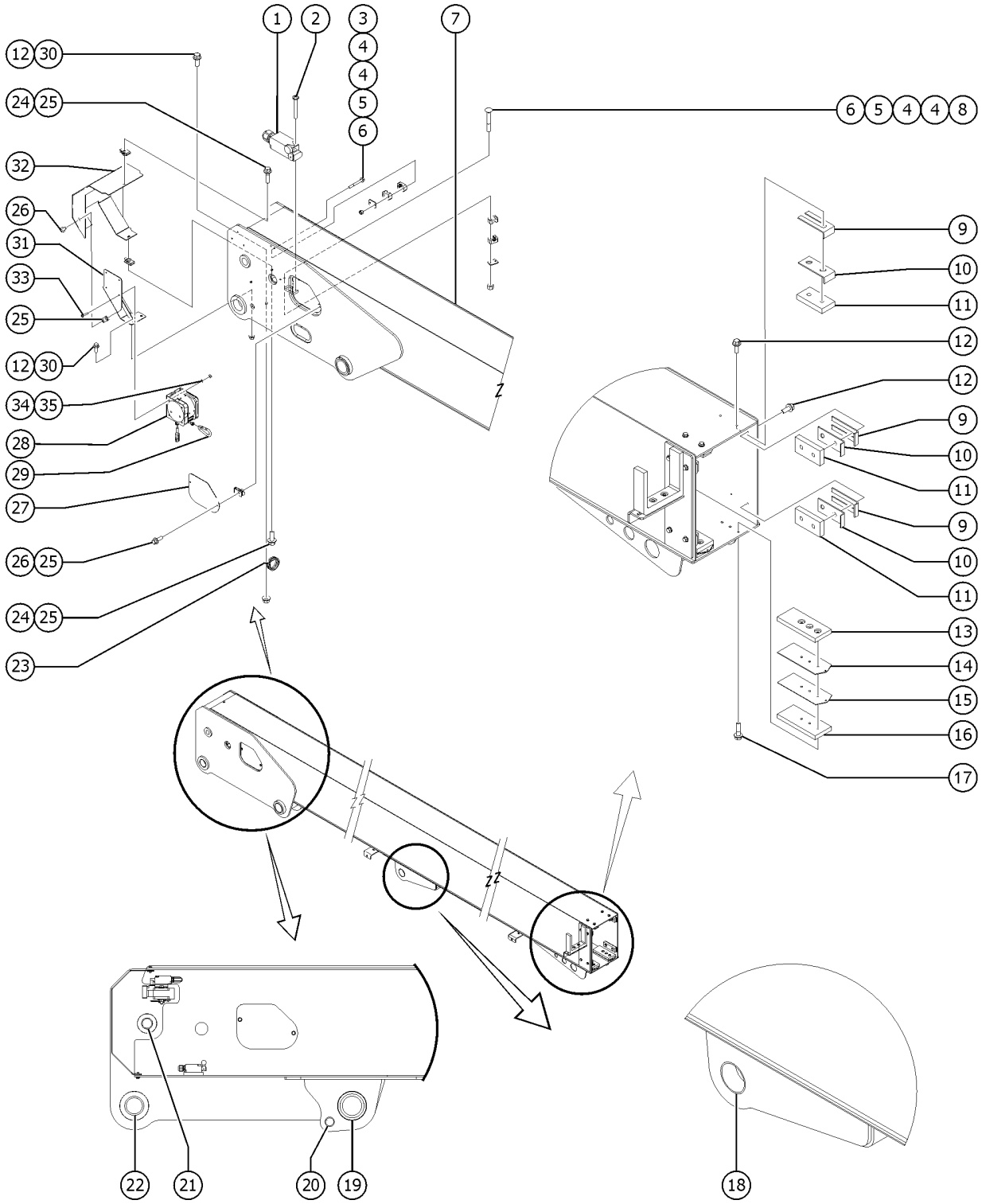

502.2 Extension Boom Tube 1 (from SN S85XCH-4385)

Item	Part No.	Description	Qty.
1		REF. LIMIT SWITCH LSB1RS (Boom Retract Limit Switch) (refer to 316.1 and 317.1)	1
2	824216GT	SCREW, PHPM, 10-32 X 1.5, ZAG	2
3	824083GT	SCREW,HHF,1/4-20X2.5,8,ZAG	2
4	117310GT	CLAMP HALF SET,SINGLE,5/8"TUBE	4
5	117312GT	CLAMP CVR PLATE,SINGLE,GRP 2	2
6	1274165GT	NUT,NYLOCK,1/4-20,C,ZAG	1
7	1273660GT	ASSEMBLY,BOOM #1 includes bearings	1
8	1255797GT	BOLT,CARRIAGE,1/4-20X2,5,ZAG	2
9	1276017GT	SHIM,WEAR PAD,7 X 1.5,16GA	6
10	1276018GT	SHIM,WEAR PAD,7 X 1.5,14GA	6
11	1273674GT	WEAR PAD,7 X 1.5 X .875 W/INSERT	6
12	824090GT	SCREW,HHF,3/8-16X1,8,ZAG	15
13	1276021GT	WEAR PAD,7 X 3 X .625 W/INSERT	2
14	60304GT	SHIM,WEAR PAD,7 X 3,12GA	2
15	60840GT	SHIM,WEAR PAD,7 X 3,16GA	2
16	121164GT	BAR,SPACER	2
17	824092GT	SCREW, HHF, 3/8-16 X 1.5, 8, ZAG	4
18	27697GT	BEARING,2.50IDX2.75ODX1.50L	2
19	121754GT	BEARING,3.00IDX3.50DX2.25LG	2
20	119619GT	BEARING,1.5 ID X 1.75 ODX1.5L	1
21	110876GT	BEARING,1.5"ID X 1.75OD X1.25L	2
22	101559GT	BEARING,FL,2.50IDX2.75ODX1.61L	2
23	61745GT	CLAMP,2.25,#36 X 3/8,RUB CUSH	1
24	824079GT	SCREW,HHF,1/4-20X1,8,ZAG	2
25	56912GT	SPRING CLIP,1/4-20,.025-.15X.54,ZAG	7
26	824078GT	SCREW,HHF,1/4-20X.75,8,ZAG	5
27	121029GT	COVER PLATE,BOOM	2
28	1319559GT	LENGTH TRANSDUCER, 400 IN, CAN ID 47	1

502.2 Extension Boom Tube 1 (from SN S85XCH-4385)

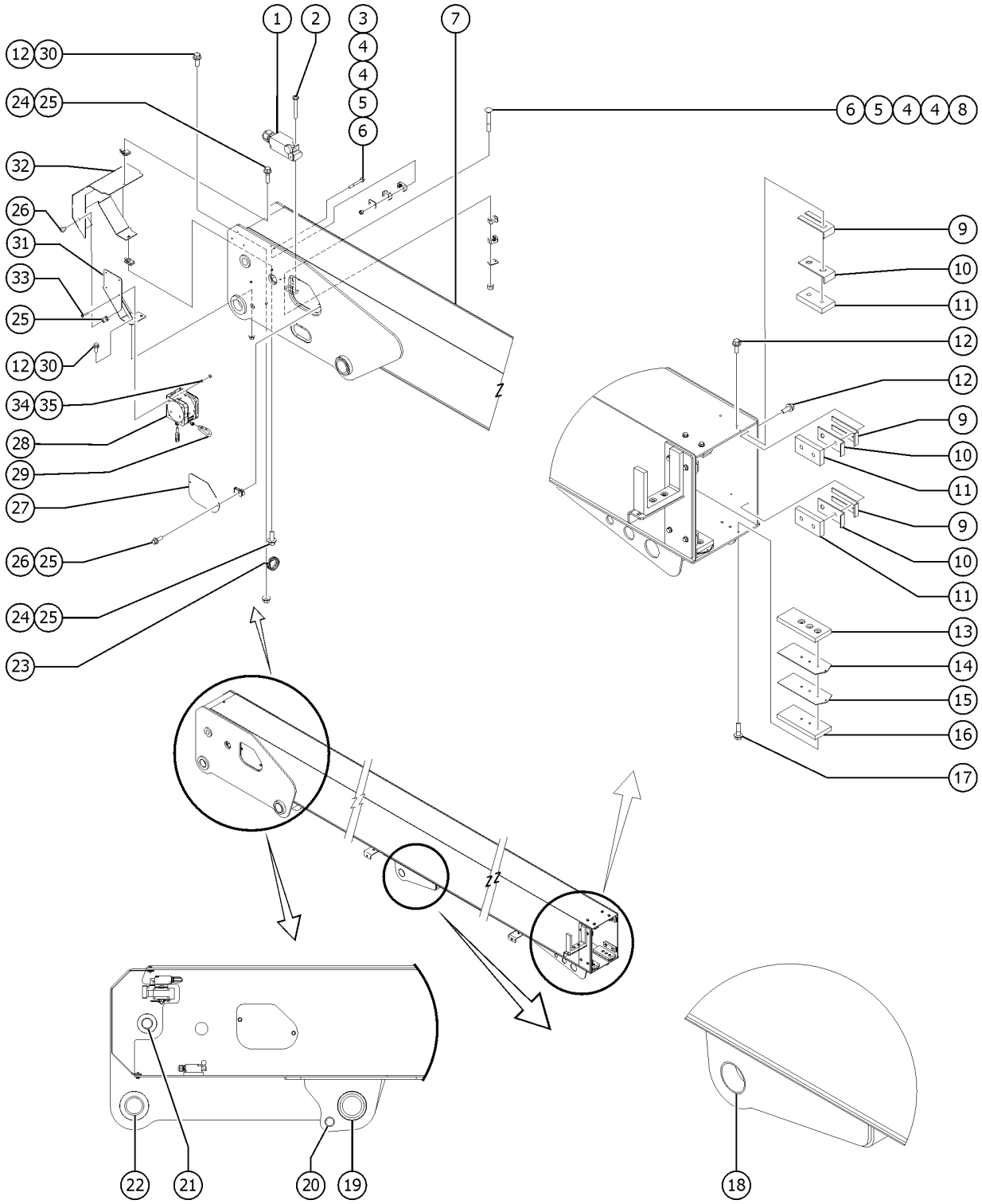

502.2 Extension Boom Tube 1 (from SN S85XCH-4385)

Item	Part No.	Description	Qty.
29	1323139GT	CARABINER, 1/4 X 2.375, 170 LBS CAPACIT	1
30	1274322GT	NUT,NYLOCK FLG,3/8-16,F,ZAG	3
31	1321041GT	WELDMENT, SENSOR MOUNT	1
32	1321271GT	WELDMENT, COVER, MAST #1	1
33	826516GT	SCREW, PHPM, 10-32 X 1.0, ZAG	4
34	1253185GT	WASHER,FLAT,#10,USS,ZAG	4
35	1274168GT	NUT,NYLOCK,10-32,A,ZAG	4

503.1 Extension Boom Tube 2

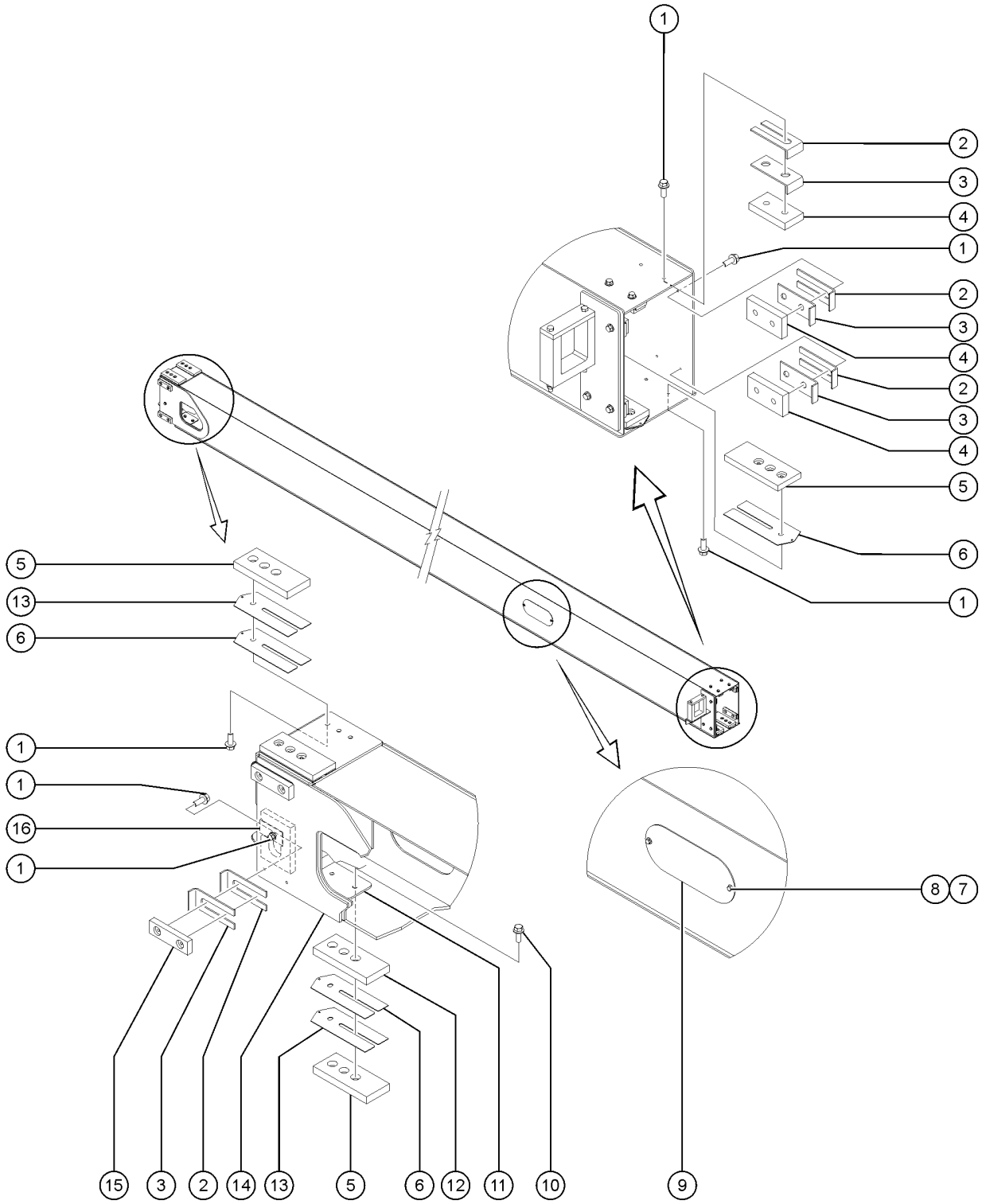

Item	Part No.	Description	Qty.
1	824090GT	SCREW,HHF,3/8-16X1,8,ZAG	30
2	1276017GT	SHIM,WEAR PAD,7 X 1.5,16GA	10
3	1276018GT	SHIM,WEAR PAD,7 X 1.5,14GA	10
4	1273674GT	WEAR PAD,7 X 1.5 X .875 W/INSERT	6
5	1276021GT	WEAR PAD,7 X 3 X .625 W/INSERT	5
6	60840GT	SHIM,WEAR PAD,7 X 3,16GA	5
7	824078GT	SCREW,HHF,1/4-20X.75,8,ZAG	4
8	56912GT	SPRING CLIP,1/4-20,.025-.15X.54,ZAG	4
9	77884GT	COVER,BOOM SECTION #2	2
10	824092GT	SCREW, HHF, 3/8-16 X 1.5, 8, ZAG	2
11	121045GT	FORMING,LS RAMP	1
12	121164GT	BAR,SPACER	1
13	60304GT	SHIM,WEAR PAD,7 X 3,12GA	5
14	1273689GT	WELDMENT,BOOM #2	1
15	1276019GT	WEAR PAD,7 X 1.5 X .625 W/INSERT	4
16	121658GT	CAP,EXTENSION	2

504.1 Extension Boom Tube 3

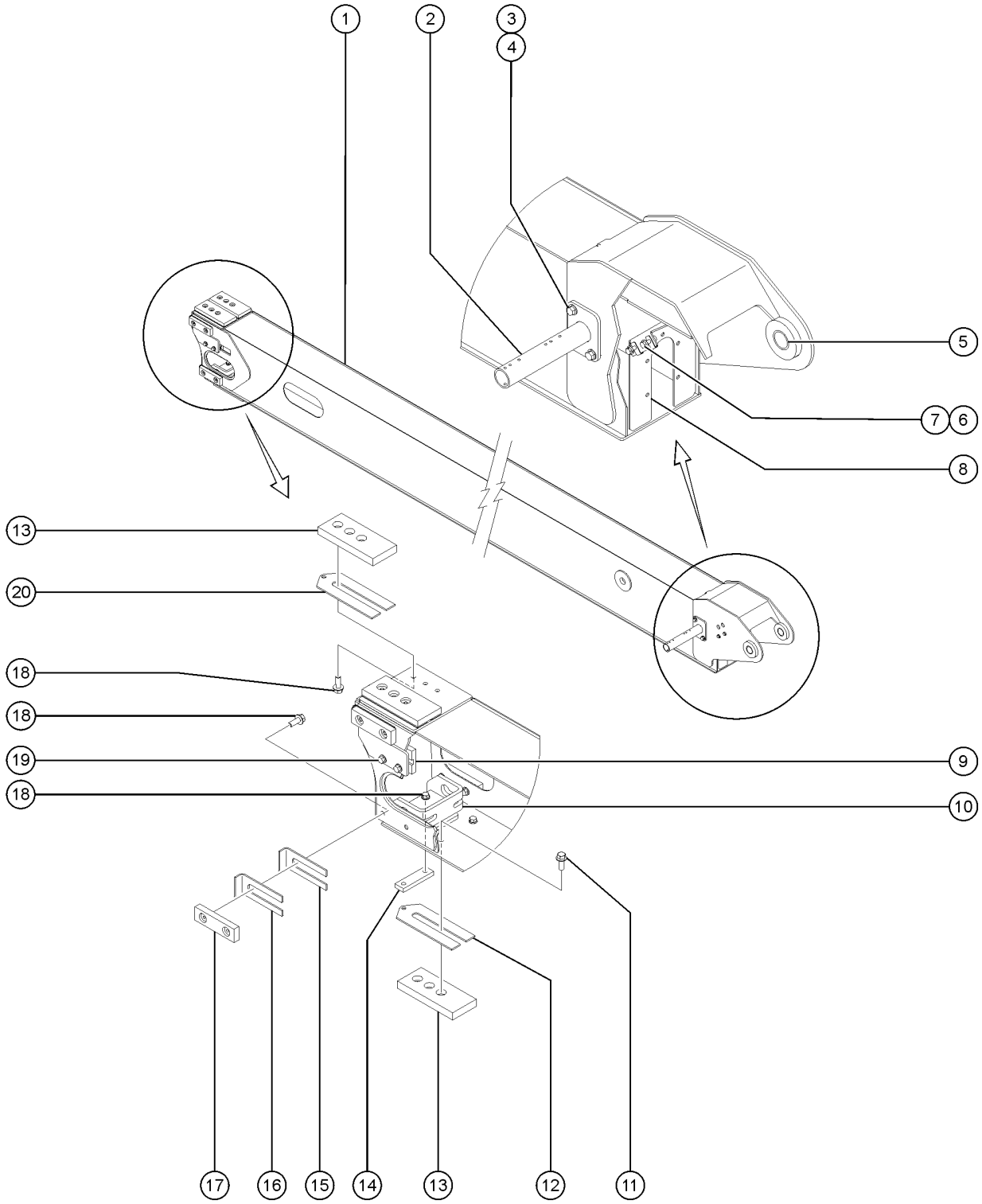

504.1 Extension Boom Tube 3

Item	Part No.	Description	Qty.
1	1273678GT	ASSEMBLY,BOOM #3 includes bearings	1
2	81347GT	WELDMENT,TRACK PULL TUBE PIVOT	1
3	824091GT	SCREW, HHF, 3/8-16 X 1.25, 8, ZAG	2
4	1274322GT	NUT,NYLOCK FLG,3/8-16,F,ZAG	2
5	1273706GT	BEARING,1.5IDX1.75ODX1.825L	2
6	824078GT	SCREW,HHF,1/4-20X.75,8,ZAG to SN S85XCH-3754	4
7	56912GT	SPRING CLIP,1/4-20,.025-.15X.54,ZAG to SN S85XCH-3754	4
8	1274869GT	FORMING, DEBRIS COVER, SEC #3 to SN S85XCH-3754	1
9	121163GT	PLATE,CABLE BLOCK	2
10	1274348GT	WELDMENT,EXTENSION BRACKET	1
11	824089GT	SCREW, HHF, 3/8-16 X .75, 8, ZAG	4
12	60840GT	SHIM,WEAR PAD,7 X 3,16GA	2
13	1276021GT	WEAR PAD,7 X 3 X .625 W/INSERT	4
14	1264897GT	PLATE,TAP BLOCK	1
15	1276017GT	SHIM,WEAR PAD,7 X 1.5,16GA	4
16	1276018GT	SHIM,WEAR PAD,7 X 1.5,14GA	4
17	1276019GT	WEAR PAD,7 X 1.5 X .625 W/INSERT	4
18	824090GT	SCREW,HHF,3/8-16X1,8,ZAG	14
19	824068GT	SCREW, HHC, 3/8-16 X 1.25, 8, ZAG	4
20	60304GT	SHIM,WEAR PAD,7 X 3,12GA	2

505.1 Cable Assembly and Primary Extension Cylinder

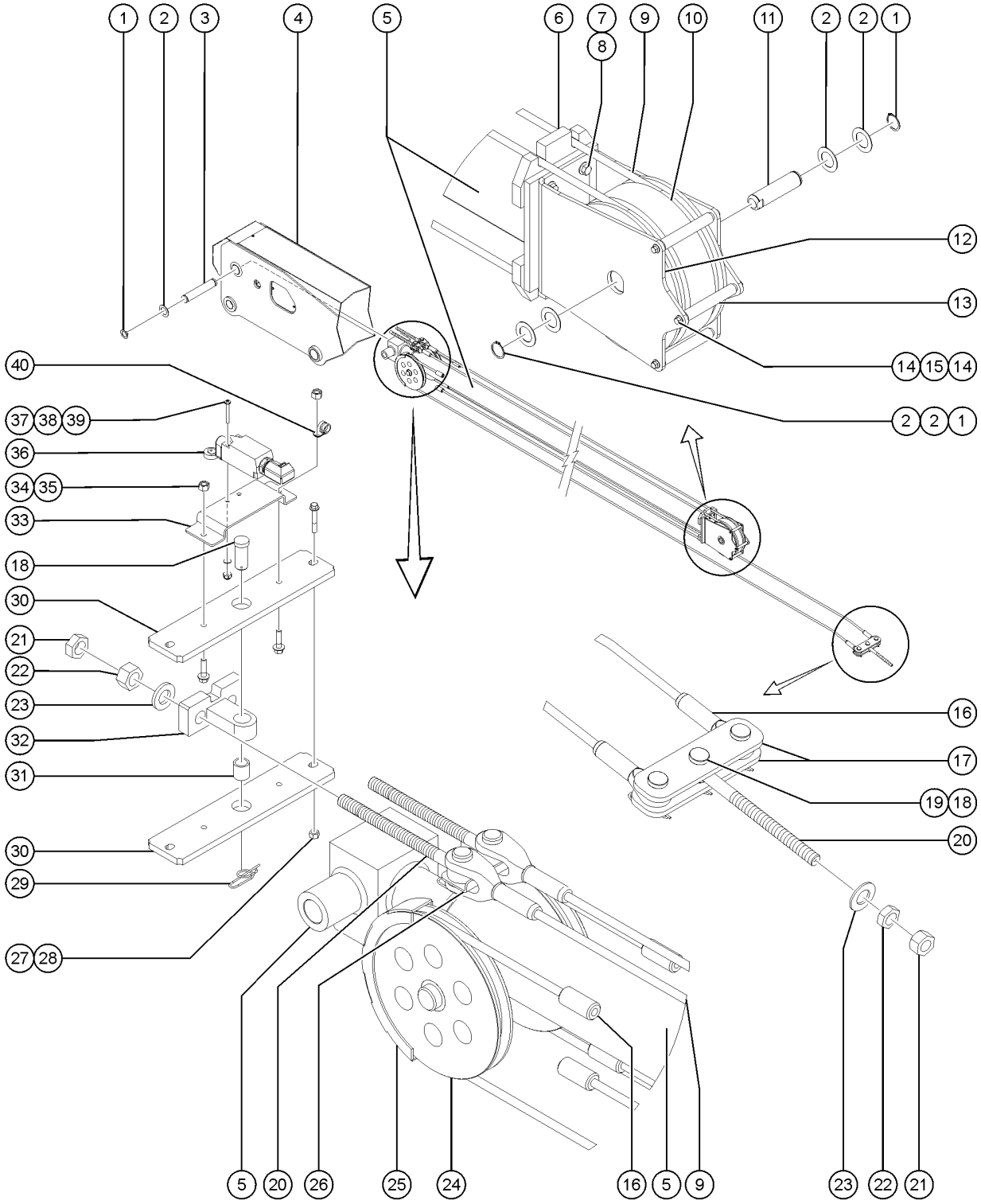

Item	Part No.	Description	Qty.
1	825796GT	SNAP RING,EXTERNAL,1.50,ZAG	4
2	1251565GT	WASHER,SHIM,1.56X2.5X.061,ZAG	6
3	121034GT	PIN,1.500 X 15.000,2 RINGS	1
4		REF. BOOM NUMBER 1 (refer to 502.1)	
5	1274253GT	CYLINDER, PRIMARY EXTENSION to SN S80XCH-2585 & S85XCH-2928	1
5-	1279051GT	SEAL KIT, CYLINDER, EXTEND	
5-	1274314GT	VALVE, COUNTERBALANCE, CACA-LHN@1200 3:1	
5-	1274315GT	VALVE, COUNTERBALANCE, CABG-LHN@1200 4.5:1	
5B	1304000GT	CYLINDER, PRIMARY EXTENSION from SN S80XCH-2585 & S85XCH-2929	1
5B-	1304001GT	SEAL KIT, EXTEND CYLINDER 1304000	
5B-	1274314GT	VALVE, COUNTERBALANCE, CACA-LHN@1200 3:1	
5B-	1274315GT	VALVE, COUNTERBALANCE, CABG-LHN@1200 4.5:1	
6	121155GT	GUIDE,EXT. CABLES	2
7	1253478GT	SCREW,HHF,3/8-16X2,8,ZAG	4
8	1274322GT	NUT,NYLOCK FLG,3/8-16,F,ZAG	4
9	1274252GT	CABLE ASSY,EXTEND	2
10	1274251GT	SHEAVE,EXTEND	1
11	121156GT	PIN,DIA. 1.50 X 5.875	1
12	121146GT	FORMING,BRACKET,EXTEND SHEAVE	1
13	121670GT	ROLLER,1/2" PVC	3
14	824078GT	SCREW,HHF,1/4-20X.75,8,ZAG	6
15	121671GT	ROLLER,1/2" ALUMINUM	3
16	232844GT	CABLE ASSEMBLY,RETRACT SET	1
17	121044GT	PLATE,RETRACT CABLE EQUALIZER	2
18	826379GT	PIN,CLEVIS,1X2.250,ZAG	4
19	74389GT	RUE RING 1.00	5
20	77656GT	ROD END,CABLE	3
20-	1274252GT	CABLE ASSY,EXTEND	

505.1 Cable Assembly and Primary Extension Cylinder

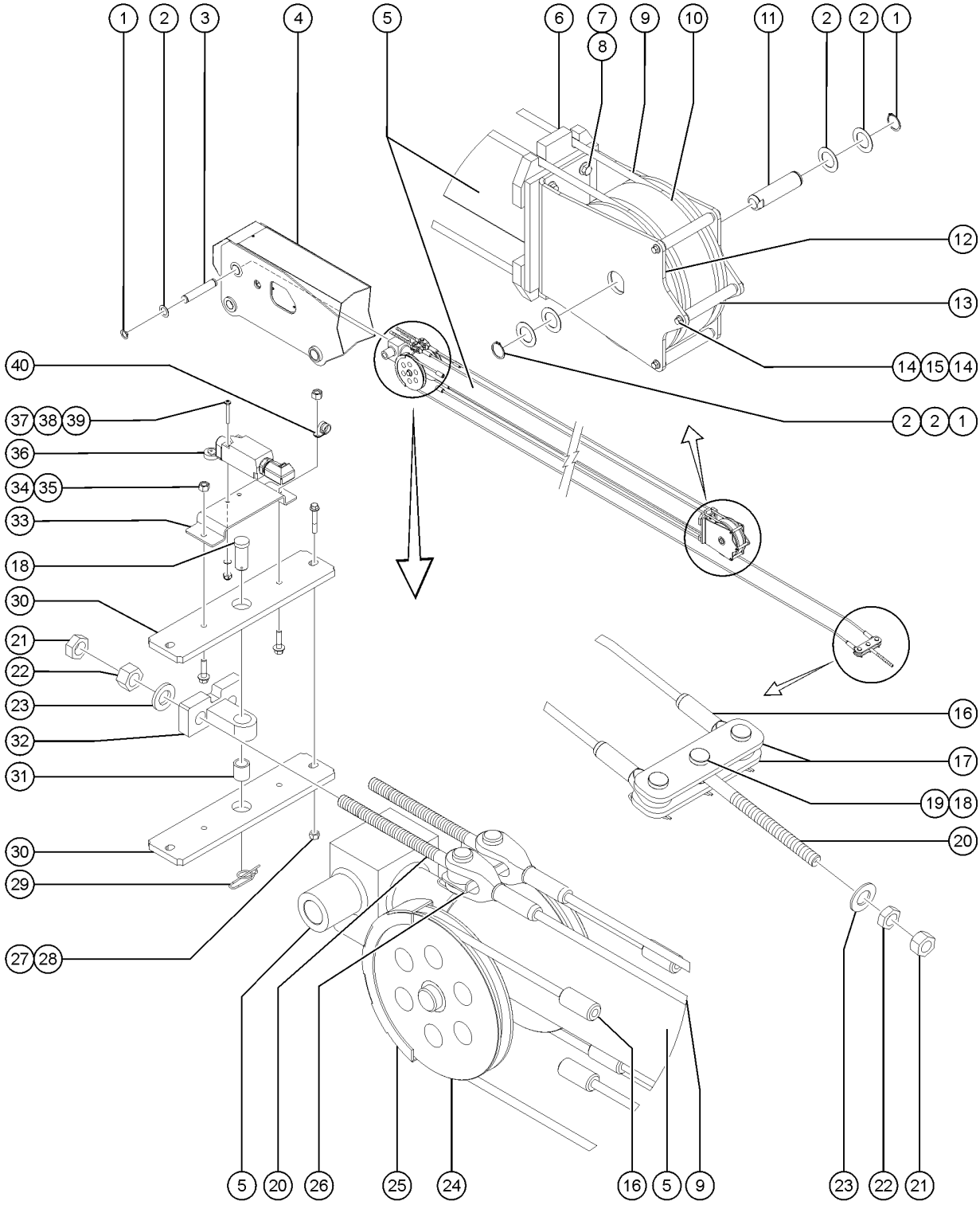

Item	Part No.	Description	Qty.
21	1256837GT	NUT,JAM,3/4-10,A, ZAG	3
22	1268597GT	NUT,3/4-10,8,ZAG	3
23	1256863GT	WASHER,FLAT,.75,F436,HRD,ZAG	3
24	88568GT	SHEAVE,RETRACT CABLE(SMALLER)	2
25	1274868GT	WELDMENT, RETRACT SHEAVE COVER	1
25-	824078GT	SCREW,HHF,1/4-20X.75,8,ZAG	
26	121189GT	PLATE,ANTIROTATION	1
27	1274166GT	NUT,NYLOCK,3/8-16,C,ZAG	2
28	1256856GT	SCREW,HHF,3/8-16X2.5,8,ZAG	2
29	824129GT	RUE RING,1.0,ZAG	5
30	121028GT	PLATE,ROCKER	2
31	25817GT	BEARING,1.00IDX1.25ODX1.00L	1
32	121181GT	MACH.,PIVOT PLATE WELDMENT	1
33	77653GT	FORMING,LIMIT SWITCH BRACKET	1
34	1274165GT	NUT,NYLOCK,1/4-20,C,ZAG	2
35	824079GT	SCREW,HHF,1/4-20X1,8,ZAG	2
36		REF. HARNESS,LS,CHAIN BREAK (Chain Break Limit Switch) (refer to 316.1 or 317.1)	1
37	824216GT	SCREW, PHPM, 10-32 X 1.5, ZAG	2
38	1253185GT	WASHER,FLAT,#10,USS,ZAG	2
39	1283005GT	NUT,NYLOCK FLG,10-32,A,ZAG	2
40	6833GT	CLAMP,0.50,#8 X 1/4,RUB CUSH	1

506.1 Boom Link Assembly - View 1

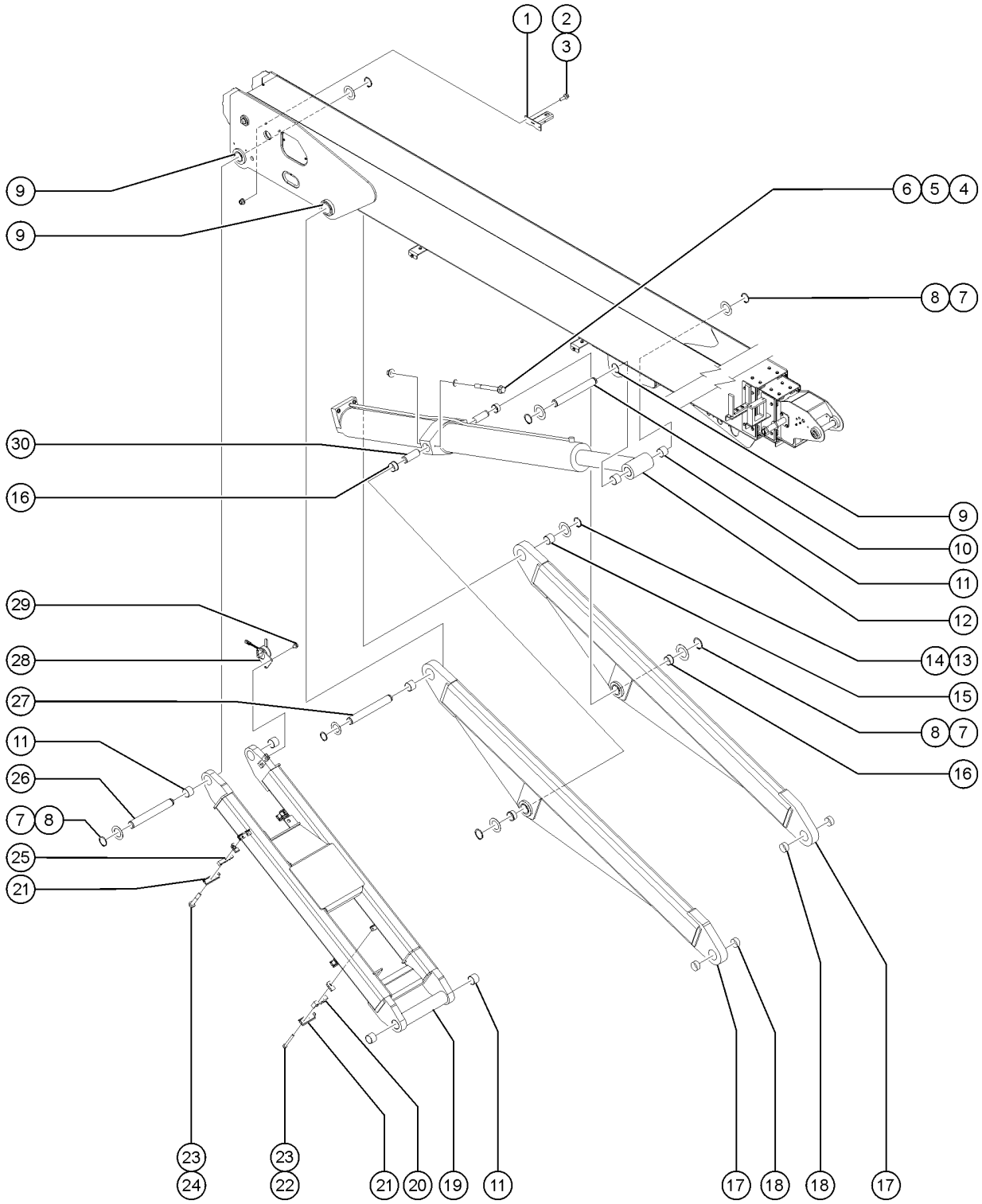

506.1 Boom Link Assembly - View 1

Item	Part No.	Description	Qty.
1	1277859GT	WELDMENT,SENSOR RETAINER,PRIMARY	1
2	824091GT	SCREW, HHF, 3/8-16 X 1.25, 8, ZAG	2
3	1274322GT	NUT,NYLOCK FLG,3/8-16,F,ZAG	2
4	1256112GT	SCREW,HHC,1/2-13X6,8,ZAG	2
5	824146GT	WASHER, FLAT, DIN125, M12, ZAB	2
6	1274172GT	NUT,NYLOCK FLG,1/2-13,G,ZAG	2
7	825760GT	SNAP RING,EXTERNAL,2.50,ZAG	6
8	1288285GT	WASHER,SHIM,2.5X3.25X.062,ZAG	6
9		REF. BEARING (refer to 502.1)	
10	121031GT	PIN,2.50 X 12.200,2 RINGS	1
11	27698GT	BEARING,2.50IDX2.75ODX2.00L	6
12	1303998GT	CYLINDER,LIFT,S80/85,XC	1
12-	1303999GT	SEAL KIT, LIFT CYLINDER 1303998	
12-	27698GT	BEARING,2.50IDX2.75ODX2.00L	
12-	60984GT	VALVE COUNTERBAL.CBBD-LJN@5000	
12-	1273414GT	VALVE,COUNTERBALANCE,CBCB-LHN 3500	
12-	75064GT	VALVE, COUNTERBALANCE, CWCG-LGN.5000	
12-	75097GT	CHOCK,SERVICE	
13	825762GT	SNAP RING,EXTERNAL,3.00,ZAG	2
14	1258728GT	WASHER,FLAT,3.062X4.5X.05,ZAG	2
15	121406GT	BEARING,3.00IDX3.25ODX2.50LG	2
16	101566GT	BEARING,FL,2.50IDX2.75ODX1.36L	4
17	1273328GT	ASSEMBLY,LONG LINK, METRIC includes bearings	2
18	121399GT	BEARING,2.50IDX2.75OBX1.25LG	4
19	1273449GT	ASSEMBLY, SHORT LINK, METRIC includes bearings	1
20	1277861GT	CLAMP,ES,SHORT LINK	3
21	121089GT	CLAMP,TOP,SHORT LINK	5
22	1256803GT	SCREW,HHC,1/4-20X2.75,8,ZAG	6

506.1 Boom Link Assembly - View 1

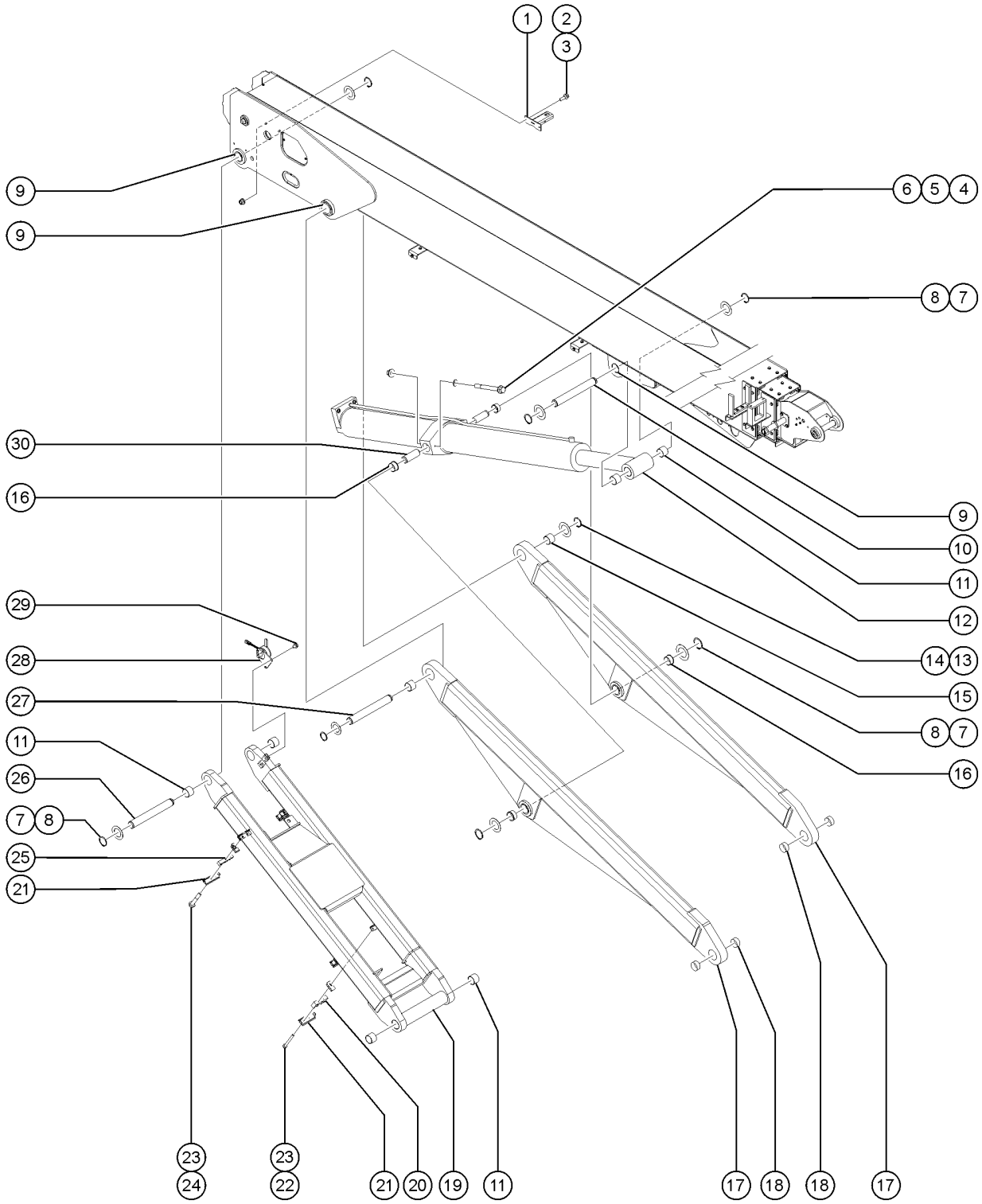

506.1 Boom Link Assembly - View 1

Item	Part No.	Description	Qty.
23	56912GT	SPRING CLIP,1/4-20,.025-.15X.54,ZAG	10
24	824064GT	SCREW, HHC, 1/4-20 X 2.25, 8, ZAG	4
25	1283305GT	CLAMP, TS, SHORT LINK	2
26	1277777GT	PIN,2.500 X 19.750,2 RINGS,2 HOLES	1
27	121033GT	PIN, 3.00 X 21.50, 2 RINGS	1
28	1277869GT	ASSEMBLY,ROTARY SENSOR MOUNT	1
28-	1286642GT	KIT,BOOM ANGLE SENSOR	
28-	1275625GT	CARRIER,SENSOR,PRIMARY	
28-	237242GT	SCREW,FHS,M3-0.5X8,DIN7991,10.9,ZAB	2
28-	237241GT	SCREW,FHS,M3-0.5X14,DIN7991,10	2
28-	1268505GT	HOUSING, SENSOR, PRIMARY	
28-	1253815GT	SNAP RING,EXTERNAL,2.00,ZAG	
28-	1277775GT	PLATE,SENSOR MAG RETAINER	
28-	1277776GT	PIN,GUIDE,SENSOR MOUNT	
29	1256857GT	SCREW,HHF,3/8-16X.625,8,ZAG	2
30	1274338GT	PIN,2.50DIA.X6.25LG.,1 RING,1 HOLE	2

507.1 Boom Link Assembly - View 2

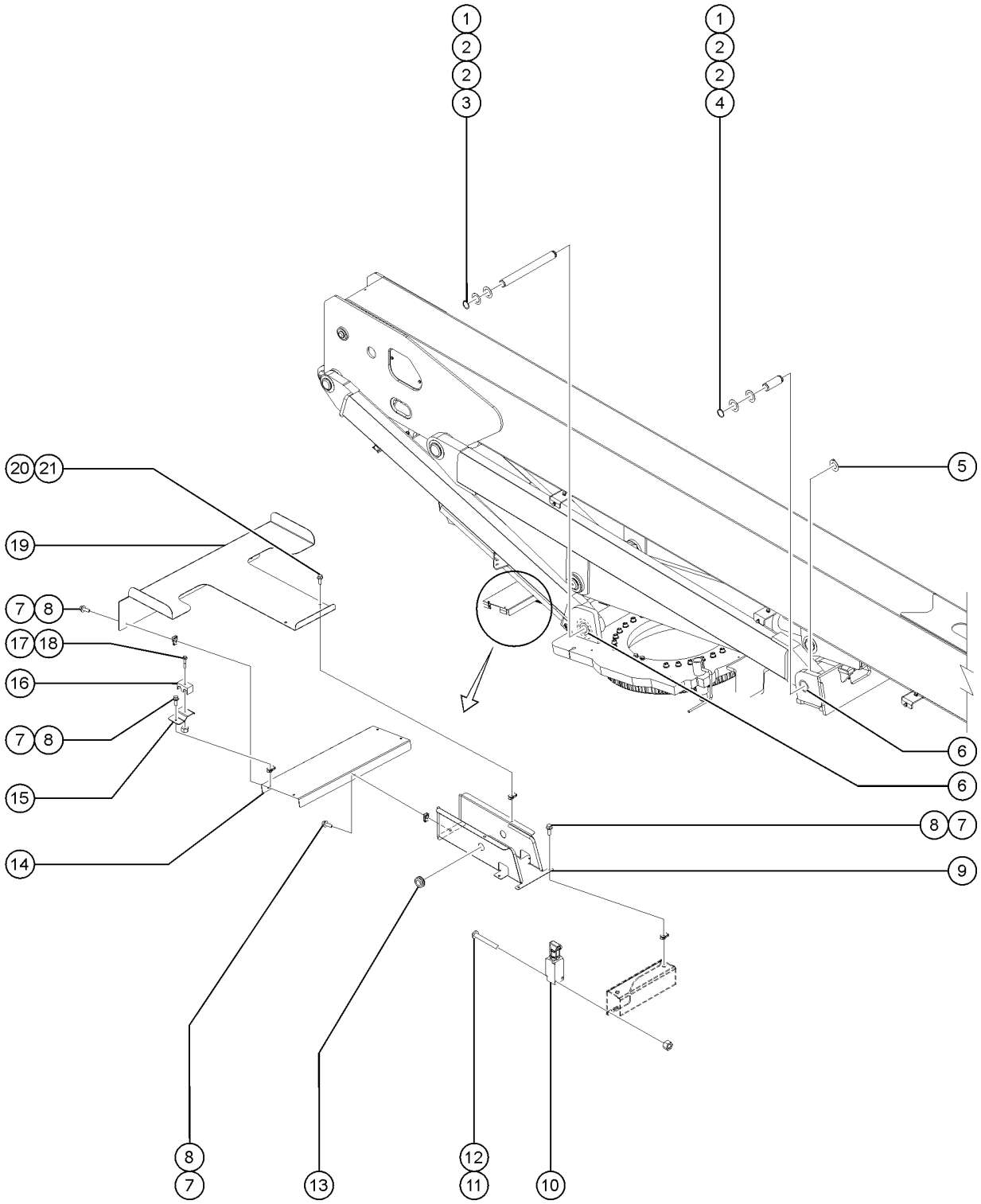

507.1 Boom Link Assembly - View 2

Item	Part No.	Description	Qty.
1	825760GT	SNAP RING,EXTERNAL,2.50,ZAG	6
2	1256111GT	WASHER,SHIM,2.5X4X.062,ZAG	12
3	121388GT	PIN,2.50DIAX24.50,2RINGS,TAPER	1
4	121387GT	PIN,2.50DIAX7.00,2 RINGS,TAPER	2
5	121869GT	FORMING,LINK THRUST WASHER	4
6	121399GT	BEARING,2.50IDX2.75OBX1.25LG	6
7	824078GT	SCREW,HHF,1/4-20X.75,8,ZAG	8
8	56912GT	SPRING CLIP,1/4-20,.025-.15X.54,ZAG	8
9	121822GT	WELDMENT,CABLE GUIDE	1
10	1280395GT	HARNESS LST3S S80/85 (Boom Down Limit Switch) (refer to 316.1 or 317.1)	1
11	824216GT	SCREW, PHPM, 10-32 X 1.5, ZAG	2
12	1274168GT	NUT,NYLOCK,10-32,A,ZAG	2
13	104570GT	GROMMET,RUBBER .688 X .25 X 1	1
14	121819GT	FORMING,CABLE SUPPORT	1
15	219393GT	FORMING,BRACKET BATTERY CABLE	1
16	70289GT	CLAMP,LINK,LH WELD WIRE	1
17	824081GT	SCREW, HHF, 1/4-20 X 1.5, 8, ZAG	1
18	1274165GT	NUT,NYLOCK,1/4-20,C,ZAG	1
19	1275052GT	FORMING, CABLE COVER to SN S85XCH-4183	1
20	824078GT	SCREW,HHF,1/4-20X.75,8,ZAG to SN S85XCH-4183	2
21	56912GT	SPRING CLIP,1/4-20,.025-.15X.54,ZAG to SN S85XCH-4183	2

508.1 Platform Rotator, S-80 XC

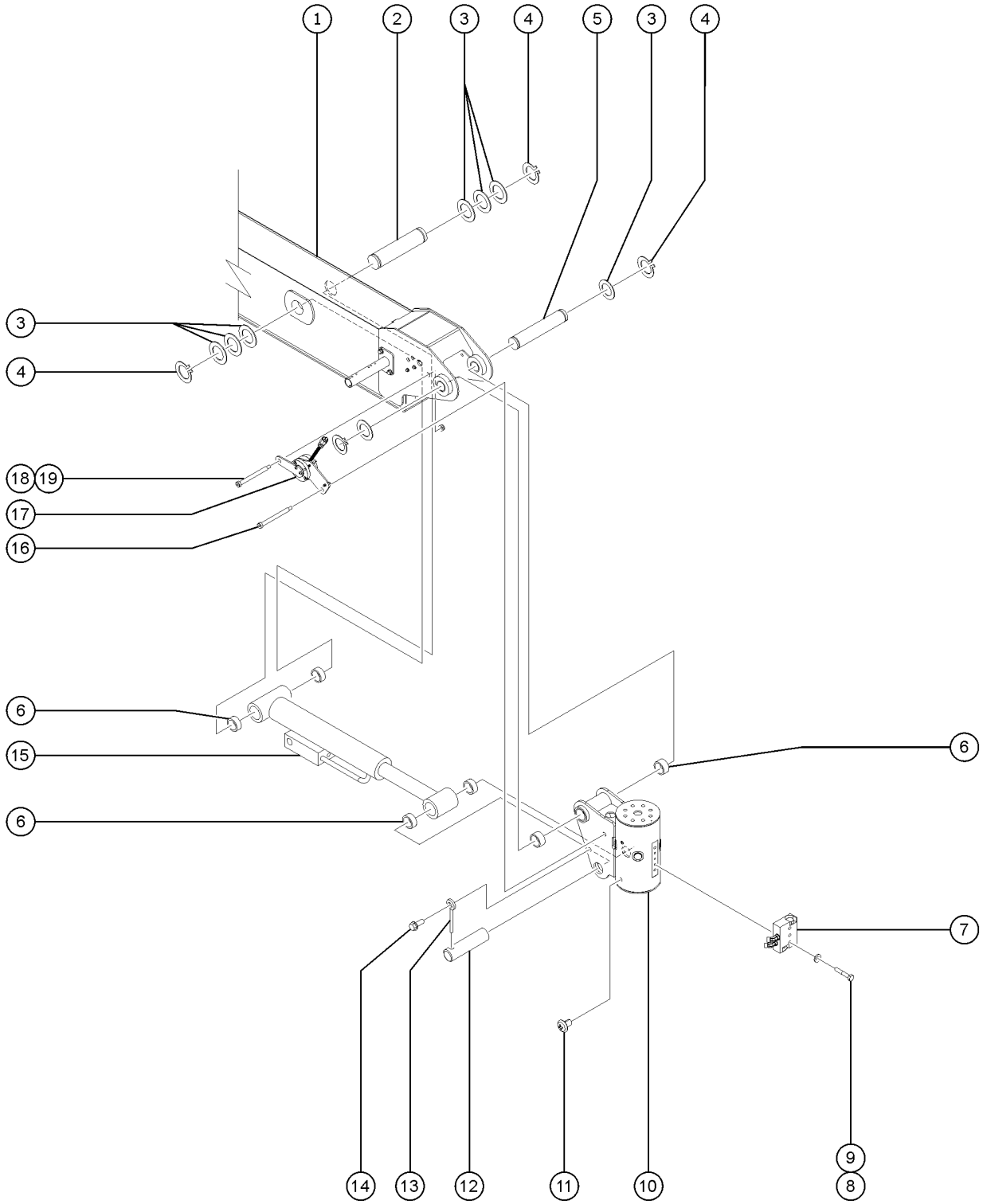

Item	Part No.	Description	Qty.
A	61283GT	SLEAVING,PARKER TEK,2.00"	1
1		REF. BOOM TUBE 3 (refer to 504.1)	
2	1279567GT	PIN, 1.50DIA X 8.50LG, 2RING	1
3	1251565GT	WASHER,SHIM,1.56X2.5X.061,ZAG	8
4	825796GT	SNAP RING,EXTERNAL,1.50,ZAG	4
5	1307726GT	PIN,1.50DIAX10.25LG,2RING,1THRD	1
6	18396GT	BEARING,1.5IDX1.75ODX1.0L	6
7		REF. ROTATOR MANIFOLD (refer to 703.1)	
8	824081GT	SCREW, HHF, 1/4-20 X 1.5, 8, ZAG	3
9	824109GT	WASHER, LOCK, 1/4, ZAG	3
10	1275169GT	ROTATOR,PLATFORM,15K,NON-JIB	1
10-	226542GT	SEAL KIT, 15K ROTATOR	
11	88516GT	SCREW,BLEEDER,M5X0.8	2
12	108855GT	PIN,1.50DIAX5.25LG,1HOLE	1
13	825019GT	ROD END, .375X3.69, ZAG	1
14	824067GT	SCREW, HHC, 3/8-16 X 1, 8, ZAG	1
15	1279049GT	SEAL KIT, CYLINDER, LEVEL	1
15-	61602GT	VALVE,COUNTERBAL.CBBB-LHN@3500	
15-	54065GT	VALVE,COUNTERBALANCE,3500***	
16	1310739GT	BOLT,SHS,1/2X5.0X3/8-16,ZAG	1
17	1306378GT	ASSEMBLY, ANGLE SENSOR, ROTATOR	1
18	1310738GT	BOLT,SHS,1/2X4.0X3/8-16,ZAG	1
19	1283028GT	NUT,LP NYLOCK,3/8-16,2,ZAG	1

509.1 Jib Boom and Platform Rotator, S-85 XC (to SN S85XCH-3699)

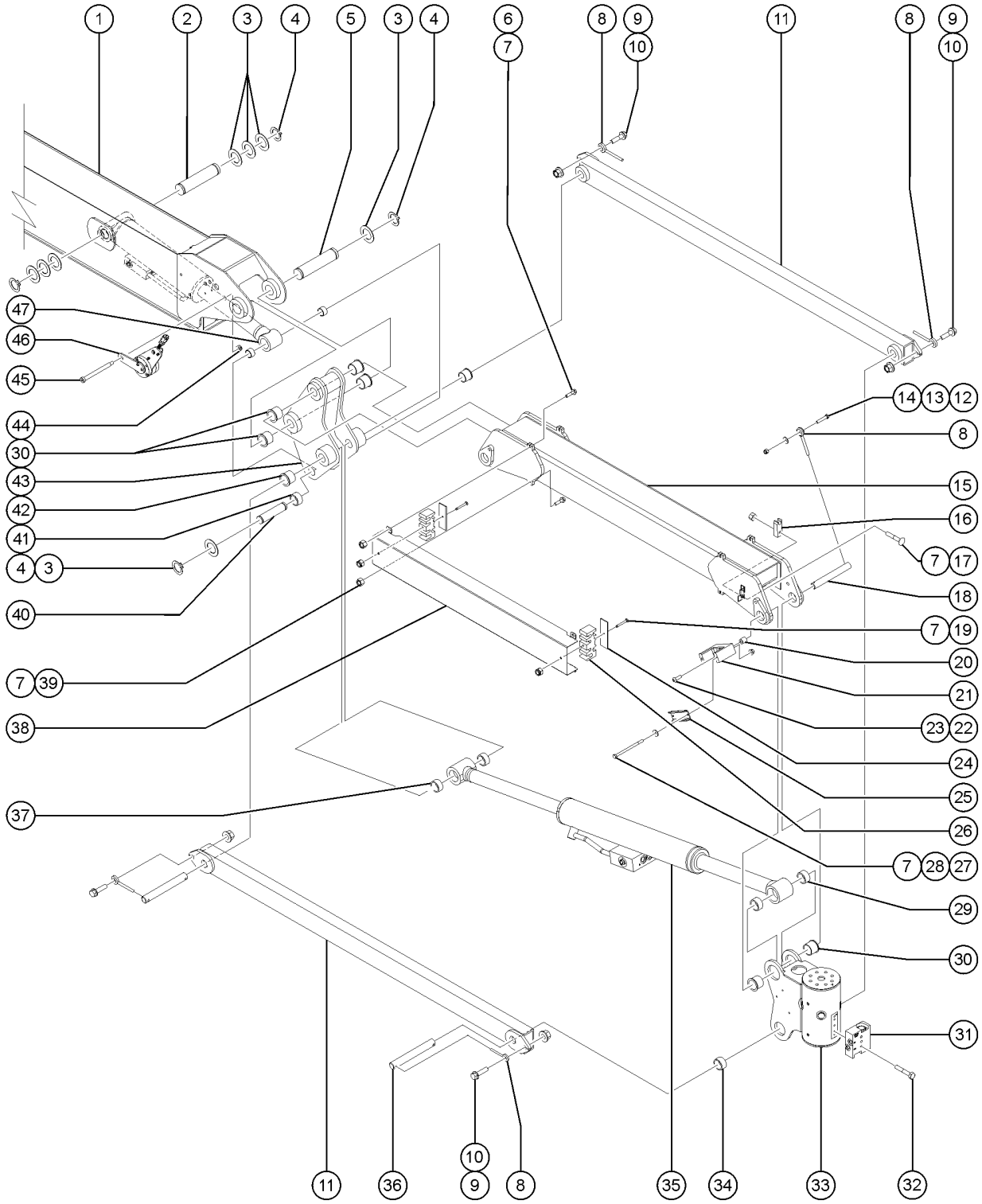

509.1 Jib Boom and Platform Rotator, S-85 XC (to SN S85XCH-3699)

Item	Part No.	Description	Qty.
-	61283GT	SLEAVING,PARKER TEK,2.00"	
1		REF. BOOM TUBE 3 (refer to 504.1)	
2	1279567GT	PIN, 1.50DIA X 8.50LG, 2RING	
3	1251565GT	WASHER,SHIM,1.56X2.5X.061,ZAG	10
4	825796GT	SNAP RING,EXTERNAL,1.50,ZAG	6
5	1307726GT	PIN,1.50DIAX10.25LG,2RING,1THRD	1
6	824079GT	SCREW,HHF,1/4-20X1,8,ZAG	2
7	1277924GT	NUT,NYLOCK FLG,1/4-20,F,ZAG	10
8	825019GT	ROD END, .375X3.69, ZAG	6
9	824092GT	SCREW, HHF, 3/8-16 X 1.5, 8, ZAG	4
10	1274322GT	NUT,NYLOCK FLG,3/8-16,F,ZAG	5
11	1274511GT	MACHINING, COMPRESSION LINK	2
12	5224GT	SCREW,HHC,3/8-16 X 2	2
13	6097GT	WASHER, FLAT, USS, 3/8", Y	2
14	4828GT	NUT, NYLOCK, 3/8-16	2
15	1269424GT	MACHINING, 5 FT JIB BOOM	1
16	1269642GT	CLAMP, HOSE	2
17	1255756GT	BOLT,CARRIAGE,1/4-20X1.5,5,ZAG	2
18	76695GT	PIN,1.50 DIA X 8.75"LG,1HOLE	2
19	1256180GT	BOLT,CARRIAGE,1/4-20X2.75,5,ZAG	2
20	101932GT	TUBE, RD., STL., DOM .75 X .437 X .78	1
21	1284573GT	GUIDE,CABLE,UHMW	1
22	1256110GT	SCREW,BHC,3/8-16X2.25,F835,ZAG	2
23	1283028GT	NUT,LP NYLOCK,3/8-16,2,ZAG	2
24	128483GT	BACKING PLATE, HOSE BLOCK, JIB	2
25	1265019GT	FORMING, CABLE GUIDE	1
26	1283307GT	CLAMP, JIB HOSE/CABLE	2
27	824065GT	SCREW,HHC,1/4-20X4,8,ZAG	4

509.1 Jib Boom and Platform Rotator, S-85 XC (to SN S85XCH-3699)

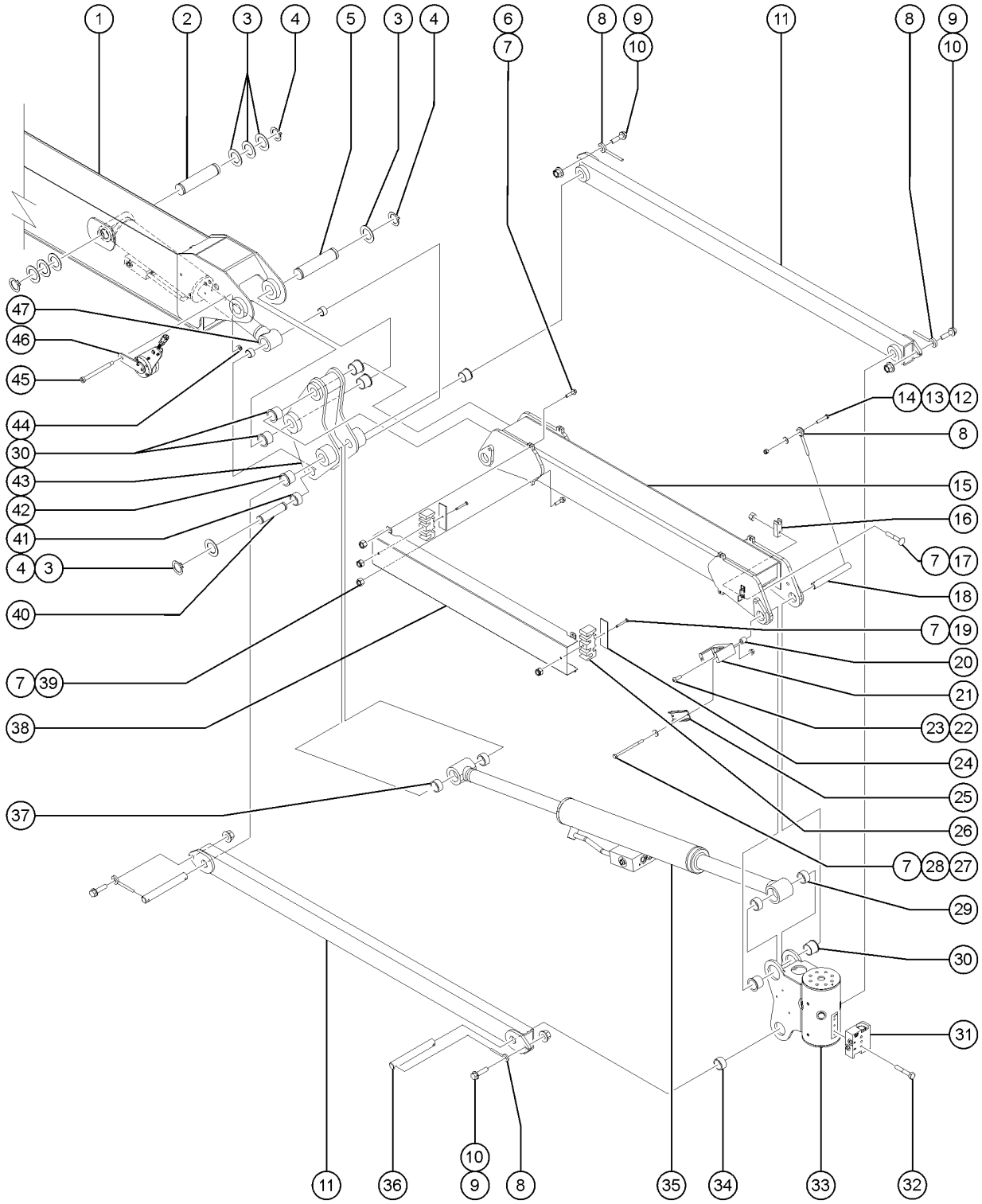

509.1 Jib Boom and Platform Rotator, S-85 XC (to SN S85XCH-3699)

Item	Part No.	Description	Qty.
28	824113GT	WASHER,FLAT,USS,1/4,ZAG	4
29	88280GT	BEARING,1.5IDX1.75ODX0.75L	2
30	214226GT	BEARING,FL,1.75IDX2.00ODX1.61L	4
31		REF. ROTATOR MANIFOLD (refer to 703.1)	1
32	824081GT	SCREW, HHF, 1/4-20 X 1.5, 8, ZAG	3
33	214225GT	ROTATOR,PLATFORM,15K,JIB	1
33-	226542GT	SEAL KIT, 15K ROTATOR	
33-	88516GT	SCREW,BLEEDER,M5X0.8	
34	30222GT	BEARING,FL,1.25IDX1.41ODX1.50L	2
35	1276820GT	CYLINDER, JIB	1
35-	1268011GT	SEAL KIT	
36	81175GT	PIN,1.25DIAX14.45LG,2HOLE	2
37	30220GT	BEARING,1.25ID X 1.5OD X 0.69L	2
38	1269367GT	FORMING, HOSE COVER	1
39	824080GT	SCREW, HHF, 1/4-20 X 1.25, 8, ZAG	2
40	1276484GT	PIN, 1.50X5.625, 2 RING	1
41	18396GT	BEARING,1.5IDX1.75ODX1.0L	4
42	128268GT	BEARING,FL, 1.25X1.5X2.13	2
43	1288386GT	ASSY, JIB BELLCRANK WITH BEARINGS	1
44	1283028GT	NUT,LP NYLOCK,3/8-16,2,ZAG	1
45	1310738GT	BOLT,SHS,1/2X4.0X3/8-16,ZAG	2
46	1306377GT	ASSEMBLY, ANGLE SENSOR, BELLCRANK	1
47	1311457GT	CYLINDER, PLATFORM LEVEL	1
47-	1279049GT	SEAL KIT, CYLINDER, LEVEL	1
47-	61602GT	VALVE,COUNTERBAL.CBBB-LHN@3500	
47-	54065GT	VALVE,COUNTERBALANCE,3500***	

509.2 Jib Boom and Platform Rotator, S-85 XC (from SN S85XCH-3700)

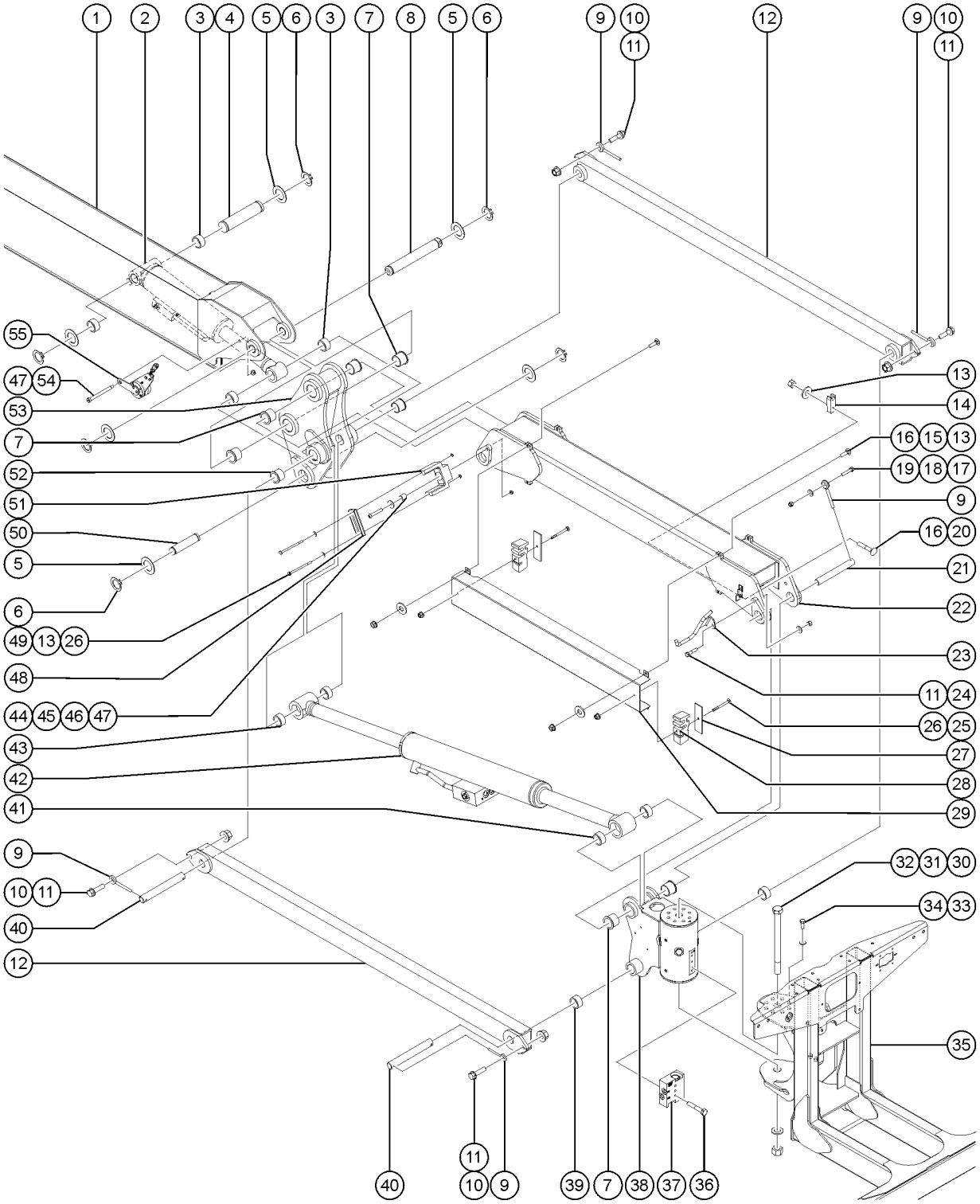

509.2 Jib Boom and Platform Rotator, S-85 XC (from SN S85XCH-3700)

Item	Part No.	Description	Qty.
A	61283GT	SLEAVING,PARKER TEK,2.00"	
1		ASSEMBLY, BOOM #2 WITH BEARINGS, S40/45XC (refer to 504.1)	1
2	1311457GT	CYLINDER, PLATFORM LEVEL includes bearings	1
2-	54065GT	VALVE,COUNTERBALANCE,3500***	1
2-	61602GT	VALVE,COUNTERBAL.CBBB-LHN@3500	1
2-	1279049GT	SEAL KIT, CYLINDER, LEVEL	
3	18396GT	BEARING,1.5IDX1.75ODX1.0L	4
4	1279567GT	PIN, 1.50DIA X 8.50LG, 2RING	1
5	1251565GT	WASHER,SHIM,1.56X2.5X.061,ZAG	6
6	825796GT	SNAP RING,EXTERNAL,1.50,ZAG	6
7	214226GT	BEARING,FL,1.75IDX2.00ODX1.61L	6
8	1307726GT	PIN,1.50DIAX10.25LG,2RING,1THRD	1
9	825019GT	ROD END, .375X3.69, ZAG	6
10	824092GT	SCREW, HHF, 3/8-16 X 1.5, 8, ZAG	4
11	1274322GT	NUT,NYLOCK FLG,3/8-16,F,ZAG	5
12	1274511GT	MACHINING, COMPRESSION LINK	2
13	824113GT	WASHER,FLAT,USS,1/4,ZAG	8
14	1269642GT	CLAMP, HOSE	2
15	1256127GT	BOLT,CARRIAGE,1/4-20X1",GR 5,ZAG to SN S85XCH-4571	4
15B	824079GT	SCREW,HHF,1/4-20X1,8,ZAG from SN S85XCH-4572	4
16	1274165GT	NUT,NYLOCK,1/4-20,C,ZAG	6
17	1253478GT	SCREW,HHF,3/8-16X2,8,ZAG	2
18	1255758GT	WASHER,FLAT,3/8,USS,ZAG	2
19	1274166GT	NUT,NYLOCK,3/8-16,C,ZAG	2
20	1255756GT	BOLT,CARRIAGE,1/4-20X1.5,5,ZAG	2
21	76695GT	PIN,1.50 DIA X 8.75"LG,1HOLE	2
22	1269424GT	MACHINING, 5 FT JIB BOOM	1
23	1286171GT	WELDMENT, JIB HOSE GUIDE	1

509.2 Jib Boom and Platform Rotator, S-85 XC (from SN S85XCH-3700)

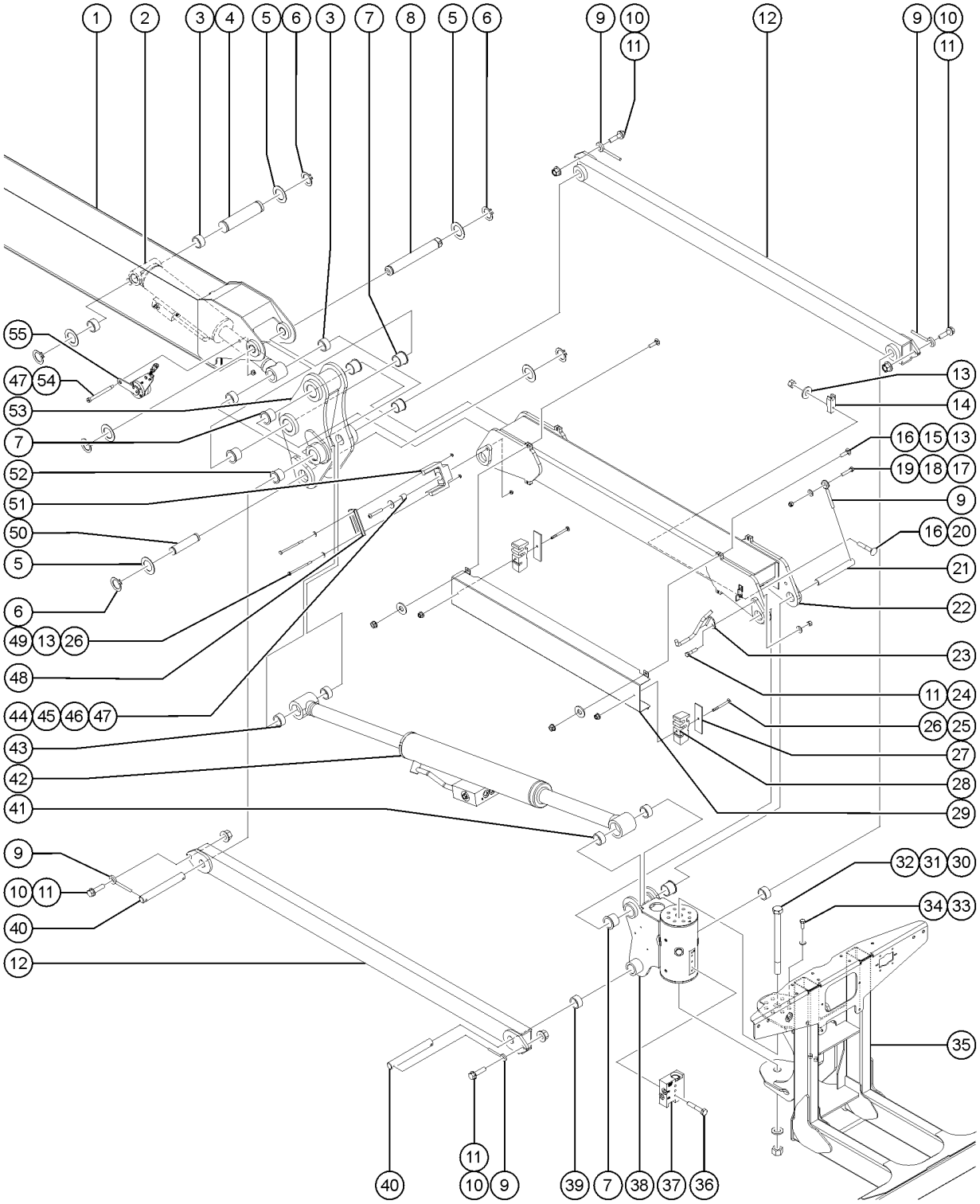

509.2 Jib Boom and Platform Rotator, S-85 XC (from SN S85XCH-3700)

Item	Part No.	Description	Qty.
24	824093GT	SCREW, HHF, 3/8-16 X 1.75, 8, ZAG	1
25	1256180GT	BOLT,CARRIAGE,1/4-20X2.75,5,ZAG	2
26	1277924GT	NUT,NYLOCK FLG,1/4-20,F,ZAG	4
27	128483GT	BACKING PLATE, HOSE BLOCK, JIB	2
28	1283307GT	CLAMP, JIB HOSE/CABLE	2
29	1269367GT	FORMING, HOSE COVER	1
30	824075GT	SCREW, HHC, 1-8 X 12.75, 5, ZAG	1
31	824116GT	WASHER,FLAT,1.0,F436,HRD,ZAG	1
32	1283024GT	NUT,NYLOCK,1-8,8,ZAG	1
33	1256843GT	SCREW,HHC,1/2-13X1.25,8,ZAG	8
34	825353GT	WASHER,FLAT,1/2,SAE,HRD,ZAG	8
35	1273734GT	WELDMENT,PLAT SUPPORT,15K,LS	1
36	824081GT	SCREW, HHF, 1/4-20 X 1.5, 8, ZAG	3
37		MANIFOLD, ROTATOR, CB (refer to 703.1)	
38	214225GT	ROTATOR,PLATFORM,15K,JIB	1
38-	226542GT	SEAL KIT, 15K ROTATOR	
38-	88516GT	SCREW,BLEEDER,M5X0.8	
39	30222GT	BEARING,FL,1.25IDX1.41ODX1.50L	2
40	81175GT	PIN,1.25DIAX14.45LG,2HOLE	2
41	88280GT	BEARING,1.5IDX1.75ODX0.75L	2
42	1276820GT	CYLINDER, JIB includes item 43 & 45	1
42-	33428GT	VALVE,COUNTERBALANCE	2
42-	1276822GT	SEAL KIT FOR JIB CYLINDER	
43	30220GT	BEARING,1.25ID X 1.5OD X 0.69L	2
44	233509GT	WASHER,FLAT,M10X30X2.5,DIN9021,ZAB	1
45	1256110GT	SCREW,BHC,3/8-16X2.25,F835,ZAG	1
46	101932GT	TUBE, RD., STL., DOM .75 X .437 X .78	1
47	1283028GT	NUT,LP NYLOCK,3/8-16,2,ZAG	2

509.2 Jib Boom and Platform Rotator, S-85 XC (from SN S85XCH-3700)

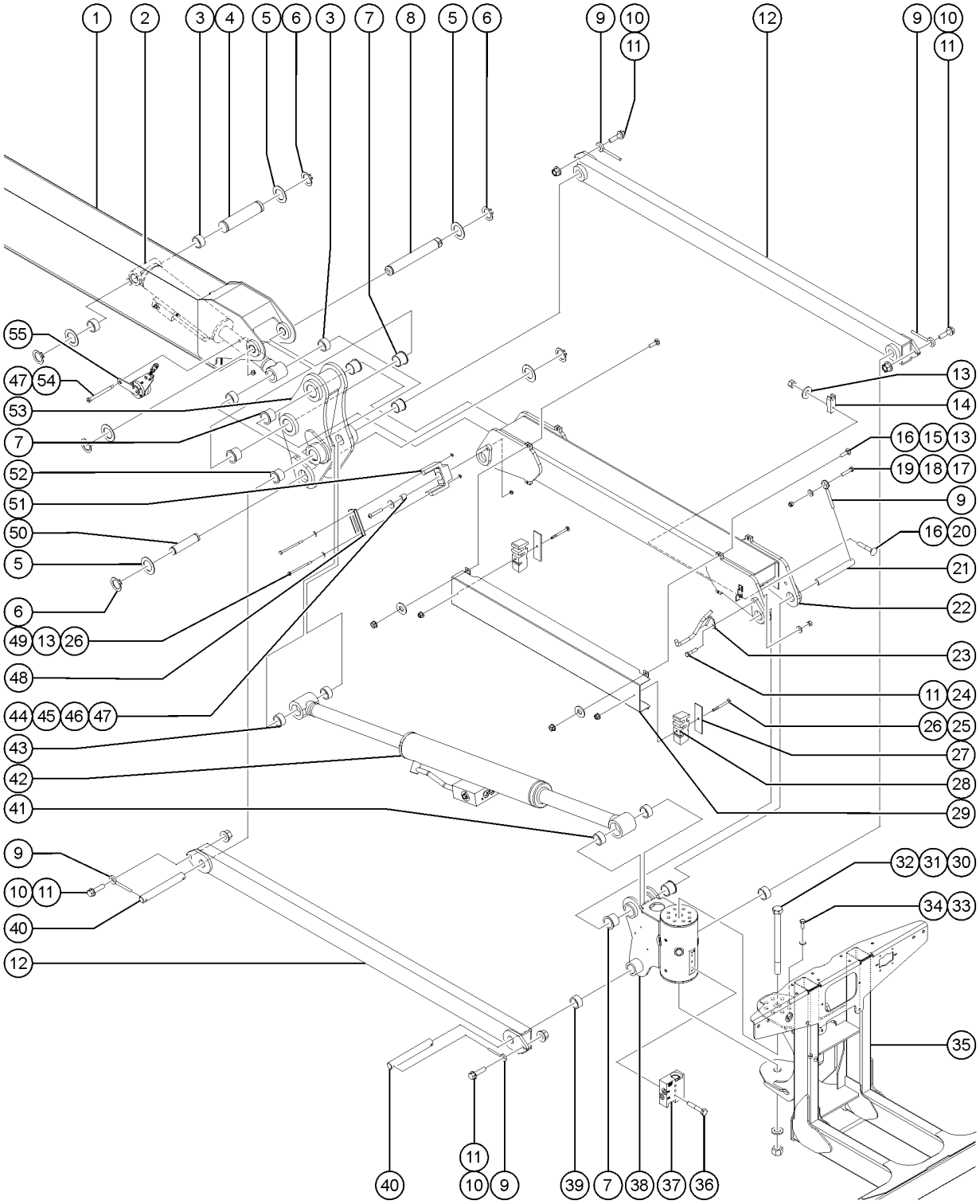

509.2 Jib Boom and Platform Rotator, S-85 XC (from SN S85XCH-3700)

Item	*Part No.*	*Description*	*Qty.*
48	1265019GT	FORMING, CABLE GUIDE	1
49	824065GT	SCREW,HHC,1/4-20X4,8,ZAG	2
50	1276484GT	PIN, 1.50X5.625, 2 RING	1
51	1284573GT	GUIDE,CABLE,UHMW	1
52	128268GT	BEARING,FL, 1.25X1.5X2.13	2
53	238330GT	MACH. JIB BELLCRANK	1
54	1310738GT	BOLT,SHS,1/2X4.0X3/8-16,ZAG	2
55	1306377GT	ASSEMBLY, ANGLE SENSOR, BELLCRANK	1

510.1 Platform Installation

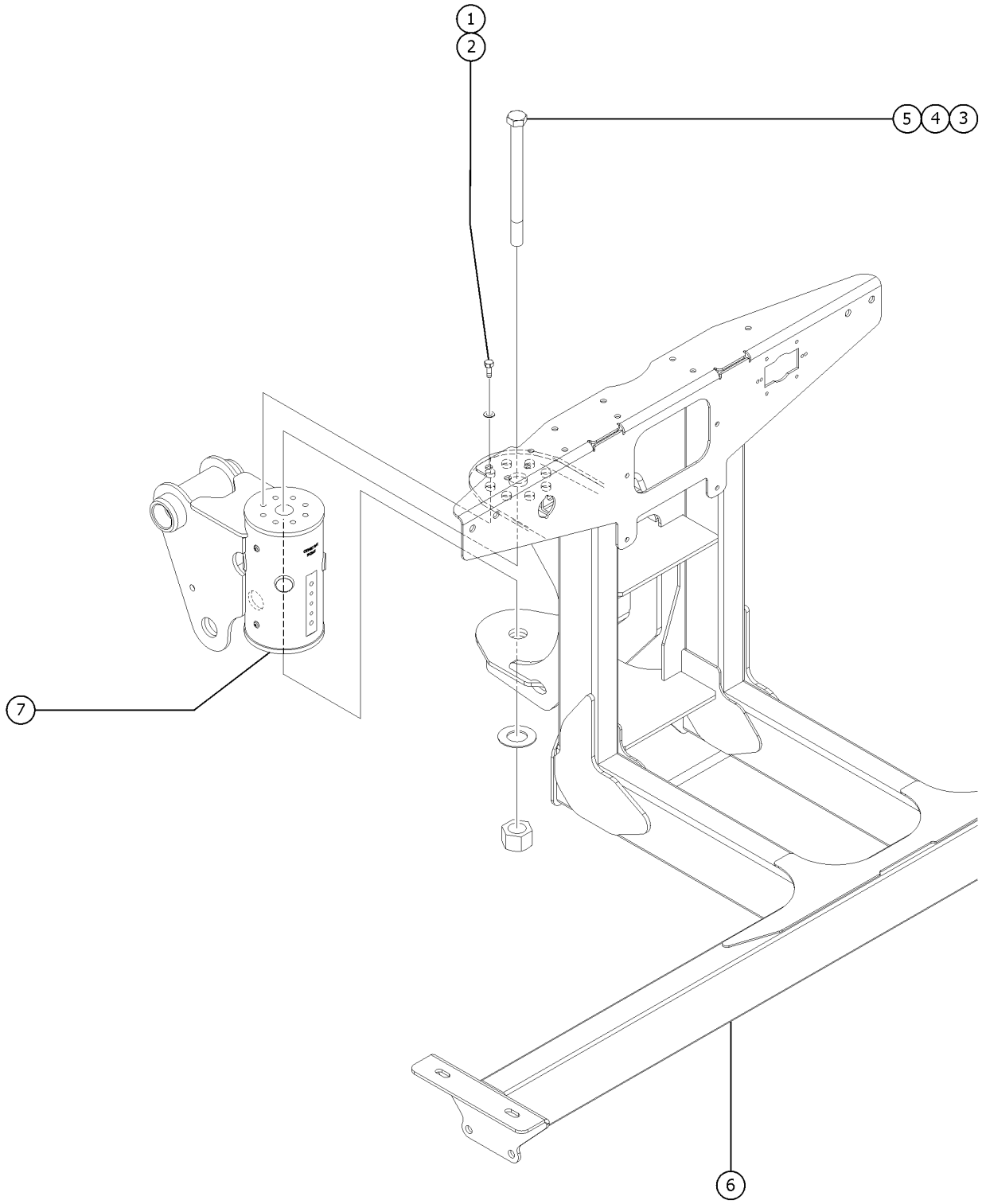

Item	Part No.	Description	Qty.
1	1256843GT	SCREW,HHC,1/2-13X1.25,8,ZAG	8
2	825353GT	WASHER,FLAT,1/2,SAE,HRD,ZAG	1
3	824075GT	SCREW, HHC, 1-8 X 12.75, 5, ZAG	1
4	824116GT	WASHER,FLAT,1.0,F436,HRD,ZAG	1
5	1283024GT	NUT,NYLOCK,1-8,8,ZAG	1
6		REF. PLATFORM MOUNT (refer to 601.1)	
7		REF. PLATFORM ROTATOR (refer to 508.1 or 509.1)	

511.1 Platform Overload Components

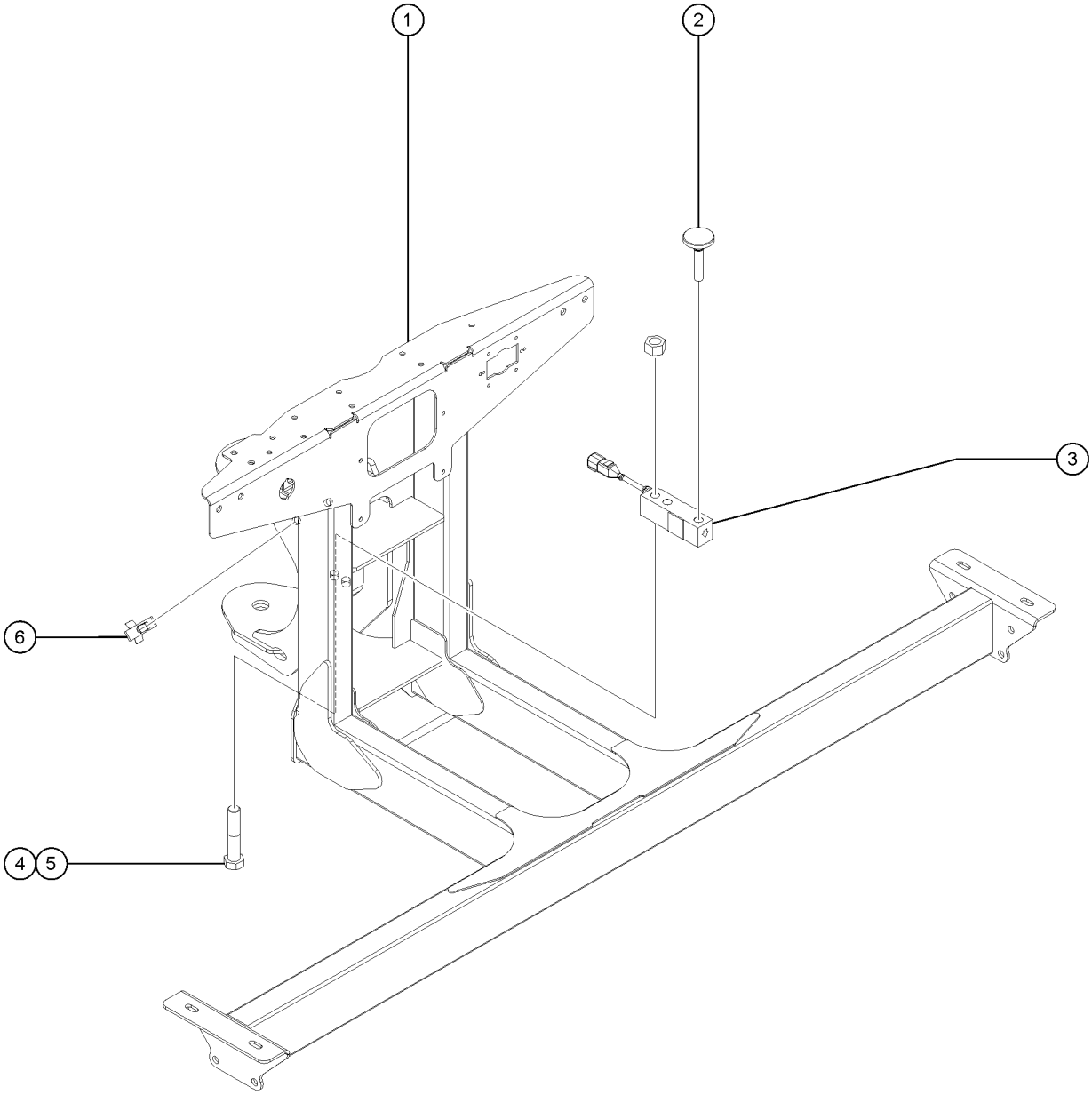

Item	Part No.	Description	Qty.
A	1274068GT	ASSEMBLY,PLAT SUPPORT,15K,LS	1
1		REF. WELDMENT, PLATFORM SUPPORT, 15 (refer to 601.1)	1
2	1270337GT	LEVELING MOUNT, SWIVEL, 1/2-20	1
3	1270278GT	LOAD CELL,J1939,650KG/1433LB NOTE: install with arrows pointing downwards (Calibration required after replacement)	1
4	1257464GT	SCREW,HHC,1/2-13X2.5,8,ZAG	2
5	1259106GT	NUT,1/2-13,8,ZAG	2
6	105214GT	CABLE TIE MOUNT, WINGED	2

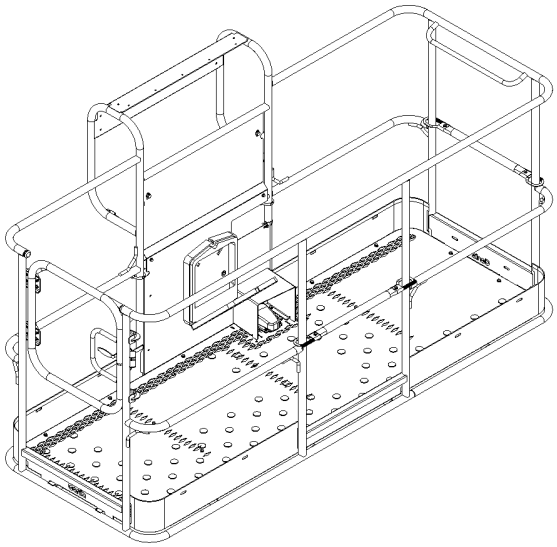

(1) Side Swing Gate Platform

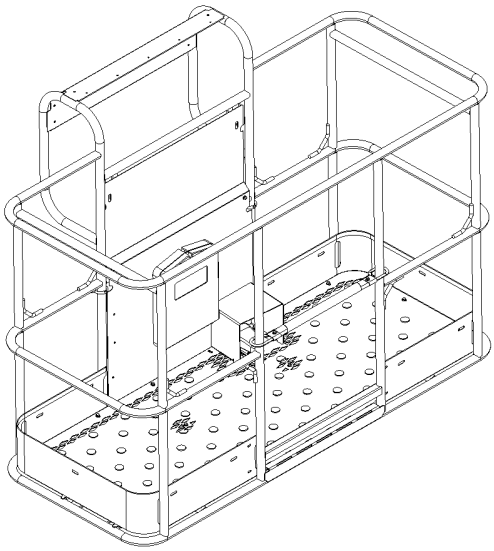

(2) Front Single Entry Platform

Item	Part No.	Description	Qty.
-		Complete Platform Assemblies with Decals	
A-		PLAT ASSY,8' W/SIDE GATE,S80/85 XC ANSI WORD USA and Canadian models	
B-		PLAT ASSY,8' W/SIDE GATE,S80/85 XC CE European models	
C-		PLAT ASSY,8' W/SIDE GATE,S80/85 XC AUS Australian models	
D-		PLAT ASSY,8' W/SIDE GATE,S80/85 XC ANSI SYM Asia and South America models	
E-		Complete Platform Assemblies and Platform Weldments without Decals (Warning tape & decals not included, refer to section 100 for decals)	
1A	1272304GT	ASSY,8FT PLAT TRI LG,BLANK front and side entry	
1A-	1274859GT	ASSY,8' PLAT WELDMENT W/SIDE GATE flooring and decal plate not included (refer to 602.1)	
1B	1272303GT	ASSY,6FT PLAT DUAL LG,BLANK front and side entry	
1B	1278858GT	6' PLATFORM W/SIDE SWING GATE KIT CE front and side entry	
2	160809GT	ASSY,6FT PLATFORM,NO DECALS single entry	
2-	73900GT	WELDMNT,6 FT PLATFORM flooring and decal plate not included (refer to 602.1)	

602.1 Platform Components, S-80 XC

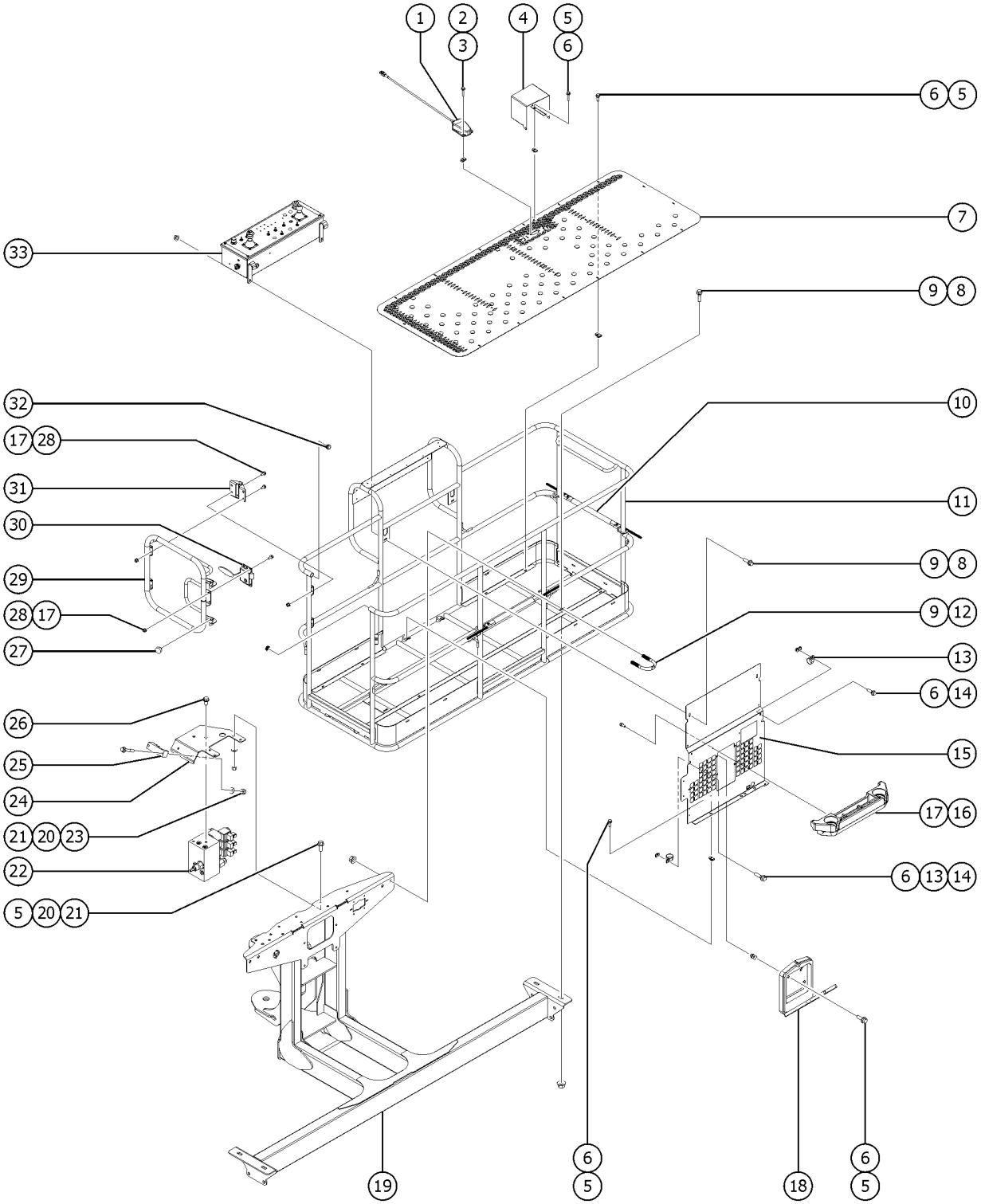

Item	Part No.	Description	Qty.
1	227618GT	ASSEMBLY,FOOTSWITCH	1
2	1269641GT	SCREW,HHF-S,10-24X1,5,ZAG	2
3	73575GT	SPRING CLIP,10-24,.025-.125X.468,ZAG	2
4	147121GT	COVER, FOOT SWITCH, LARGE	1
5	824078GT	SCREW,HHF,1/4-20X.75,8,ZAG	
6	56912GT	SPRING CLIP,1/4-20,.025-.15X.54,ZAG	
7	73478PGT	FLOORING, 8 FT PLATFORM*** for 8' platform	1
7B	1267746GT	FLOORING, 72X30 PLATFORM for 6' platform	1
8	824091GT	SCREW, HHF, 3/8-16 X 1.25, 8, ZAG	
9	1274322GT	NUT,NYLOCK FLG,3/8-16,F,ZAG	
10	102992GT	SLIDING MIDRAIL KIT,PTD for 8' platform	2
10B	102992GT	SLIDING MIDRAIL KIT,PTD for 6' platform	1
11	1274859GT	ASSY,8' PLAT WELDMENT W/SIDE GATE for 8' platform (includes item 10) (order floor separately)	
11B	1272303GT	ASSY,6FT PLAT DUAL LG,BLANK	1
12	1251600GT	U-BOLT, FLATTENED, 1.5DIA. X 3/8 UNC,ZAG	2
13	56424GT	CLAMP,1.25X.5 RUBBER-CUSHION	3
14	824079GT	SCREW,HHF,1/4-20X1,8,ZAG	3
15	1275088GT	FORMING, ALUM. DECAL PLATE	1
16	1289552GT	KIT, PLATFORM WORK TRAY	1
17	1256855	SCREW,HHF,1/4-20X.625,8,ZAG	12
18	24514GT	BOX, INSTRUCTION STORAGE**	1
19	1273734GT	WELDMENT,PLAT SUPPORT,15K,LS	1
20	824113GT	WASHER,FLAT,USS,1/4,ZAG	6
21	1274165GT	NUT,NYLOCK,1/4-20,C,ZAG	6
22		REF. MANIFOLD,PLATFORM (S-80 XC) (refer to 704.1)	
23	824082GT	SCREW, HHF, 1/4-20 X 1.75, 8, ZAG	2
24	1275285GT	FORMING, PLATFORM MANIFOLD MT	1
25	121582GT	CLAMP,CABLE STRAIN RELIEF	1

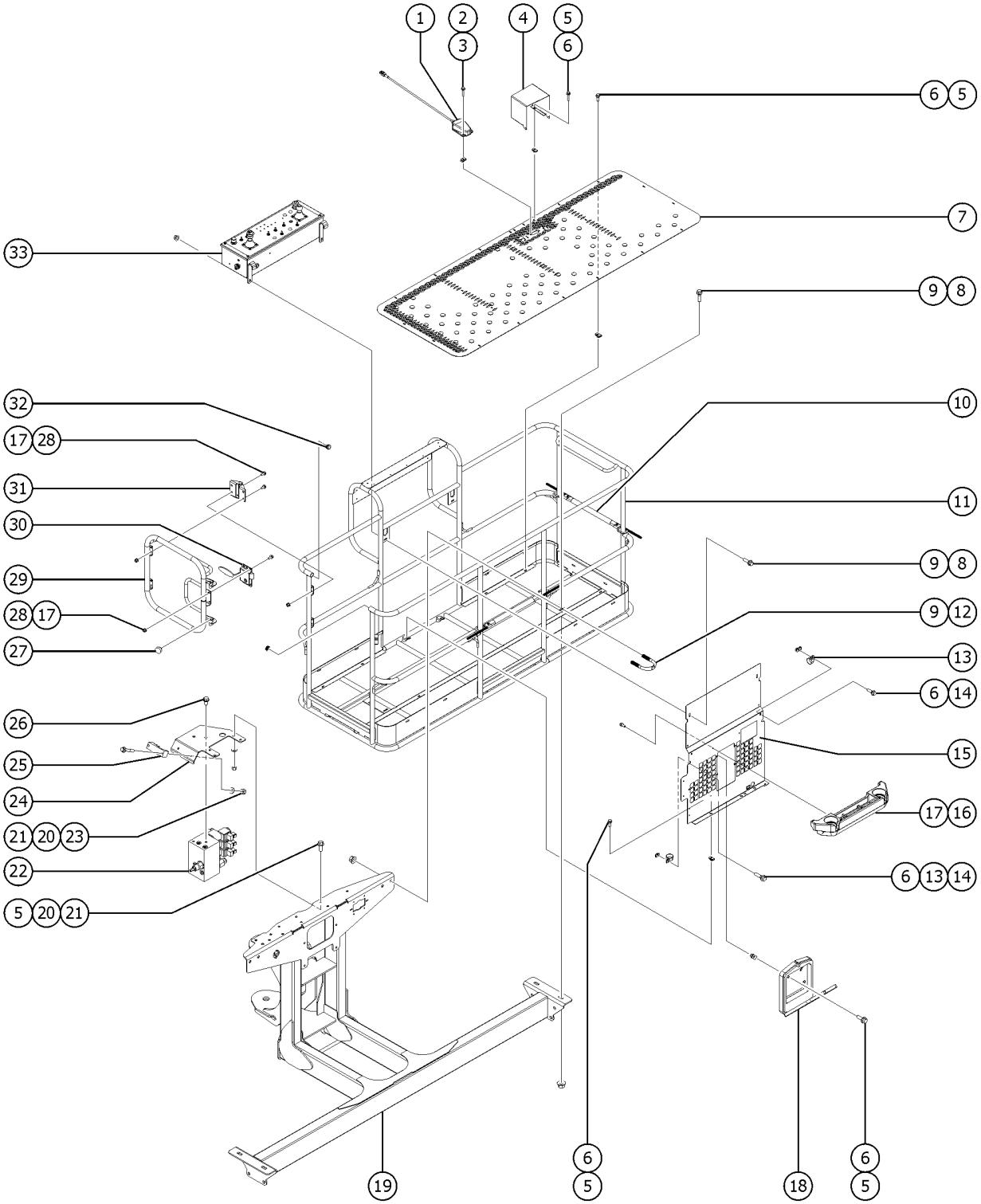
1
2
3
4
5
6
6
5
7
33
9
8
32
10
17
28
31
11
30
9
8
29
9
12
28
17
13
27
6
14
26
15
25
24
17
16
21
20
23
6
13
14
22
5
20
21
19
6
5
18
6
5

Item	Part No.	Description	Qty.
25-	T115766GT	CLAMP,STRAIN RELIEF,WK LT (Worklight option)	
26	824089GT	SCREW, HHF, 3/8-16 X .75, 8, ZAG	2
27	43392GT	BUMPER,BATTERY BOX & RAILS	2
28	1277924GT	NUT,NYLOCK FLG,1/4-20,F,ZAG for 8' platform	12
28B	824027GT	NUT, TL FLG, 1/4-20, G, ZAG for 6' platform	12
29	1265397GT	WELDMENT, SWING GATE	1
30	1267747GT	LATCH, SWING GATE	1
31	104804GT	HINGE, SPRING, LONG LEG	2
32	55753GT	BUMPER, PLASTIC, 1.25 O.D.	2
33		REF. PLATFORM CONTROL BOX ASSEMBLY (refer to 603.1)	

602.2 Platform Components, S-85 XC

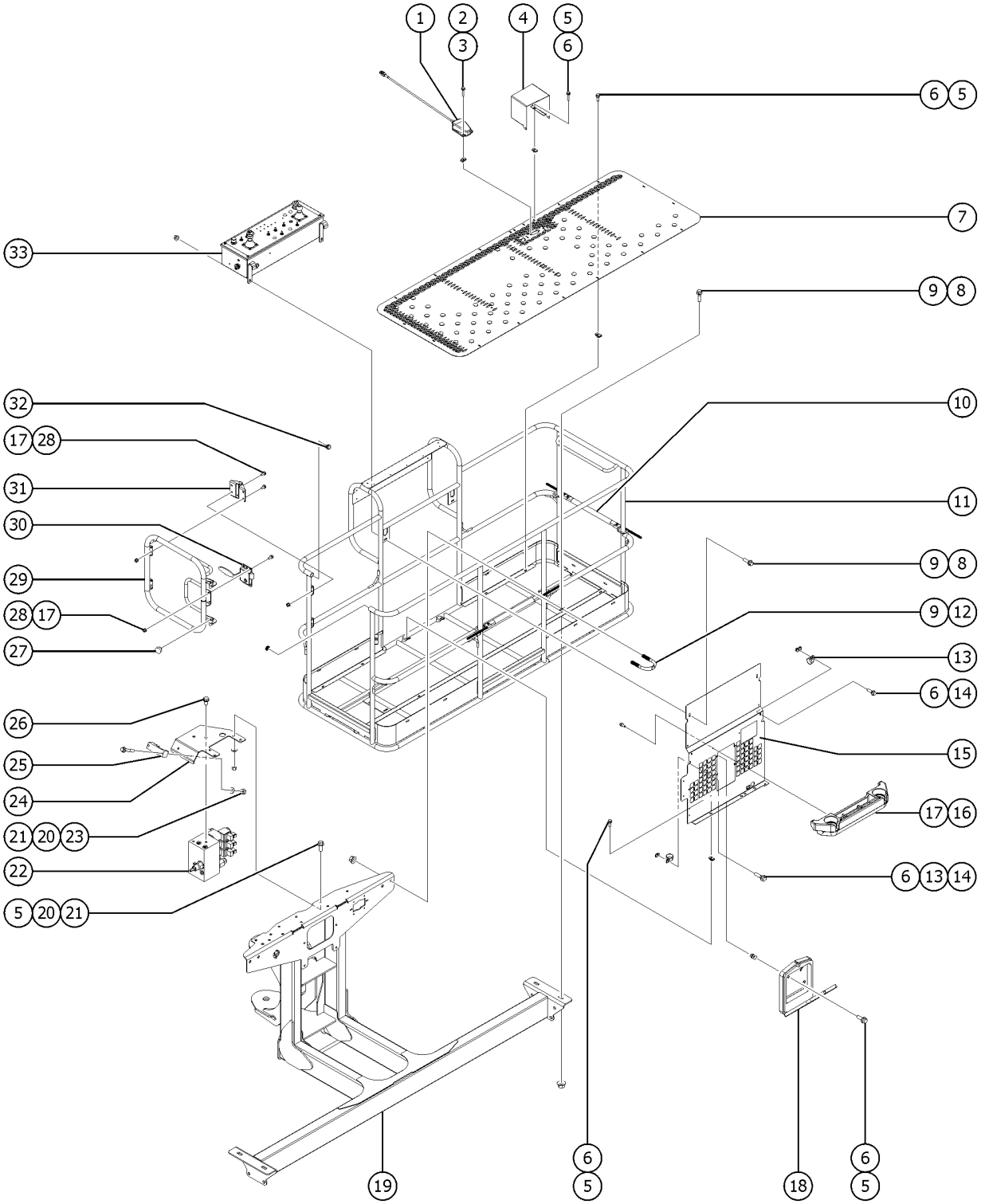

Item	Part No.	Description	Qty.
1	227618GT	ASSEMBLY,FOOTSWITCH	1
2	1269641GT	SCREW,HHF-S,10-24X1,5,ZAG	2
3	73575GT	SPRING CLIP,10-24,.025-.125X.468,ZAG	2
4	147121GT	COVER, FOOT SWITCH, LARGE	1
5	824078GT	SCREW,HHF,1/4-20X.75,8,ZAG	
6	56912GT	SPRING CLIP,1/4-20,.025-.15X.54,ZAG	
7	73478PGT	FLOORING, 8 FT PLATFORM*** for 8' platform	1
7B	1267746GT	FLOORING, 72X30 PLATFORM for 6' platform	1
8	824091GT	SCREW, HHF, 3/8-16 X 1.25, 8, ZAG	
9	1274322GT	NUT,NYLOCK FLG,3/8-16,F,ZAG	
10	102992GT	SLIDING MIDRAIL KIT,PTD for 8' platform	2
10B	102992GT	SLIDING MIDRAIL KIT,PTD for 6' platform	1
11		REF. WELDMENT, 8' PLATFORM for 8' platform refer to 601.1	1
11B		REF. WELDMENT, 6' PLATFORM for 6' platform refer to 601.1	1
12	1251600GT	U-BOLT, FLATTENED, 1.5DIA. X 3/8 UNC,ZAG	2
13	56424GT	CLAMP,1.25X.5 RUBBER-CUSHION	3
14	824079GT	SCREW,HHF,1/4-20X1,8,ZAG	3
15	1275088GT	FORMING, ALUM. DECAL PLATE	1
16	1289552GT	KIT, PLATFORM WORK TRAY	1
17	1256855	SCREW,HHF,1/4-20X.625,8,ZAG	16
18	24514GT	BOX, INSTRUCTION STORAGE**	1
19	1273734GT	WELDMENT,PLAT SUPPORT,15K,LS	1
20	824113GT	WASHER,FLAT,USS,1/4,ZAG	6
21	1274165GT	NUT,NYLOCK,1/4-20,C,ZAG	6
22		REF. MANIFOLD,PLATFORM (S-85 XC) (refer to 705.1)	
23	824082GT	SCREW, HHF, 1/4-20 X 1.75, 8, ZAG	2
24	1275285GT	FORMING, PLATFORM MANIFOLD MT	1
25	121582GT	CLAMP,CABLE STRAIN RELIEF	1

602.2 Platform Components, S-85 XC

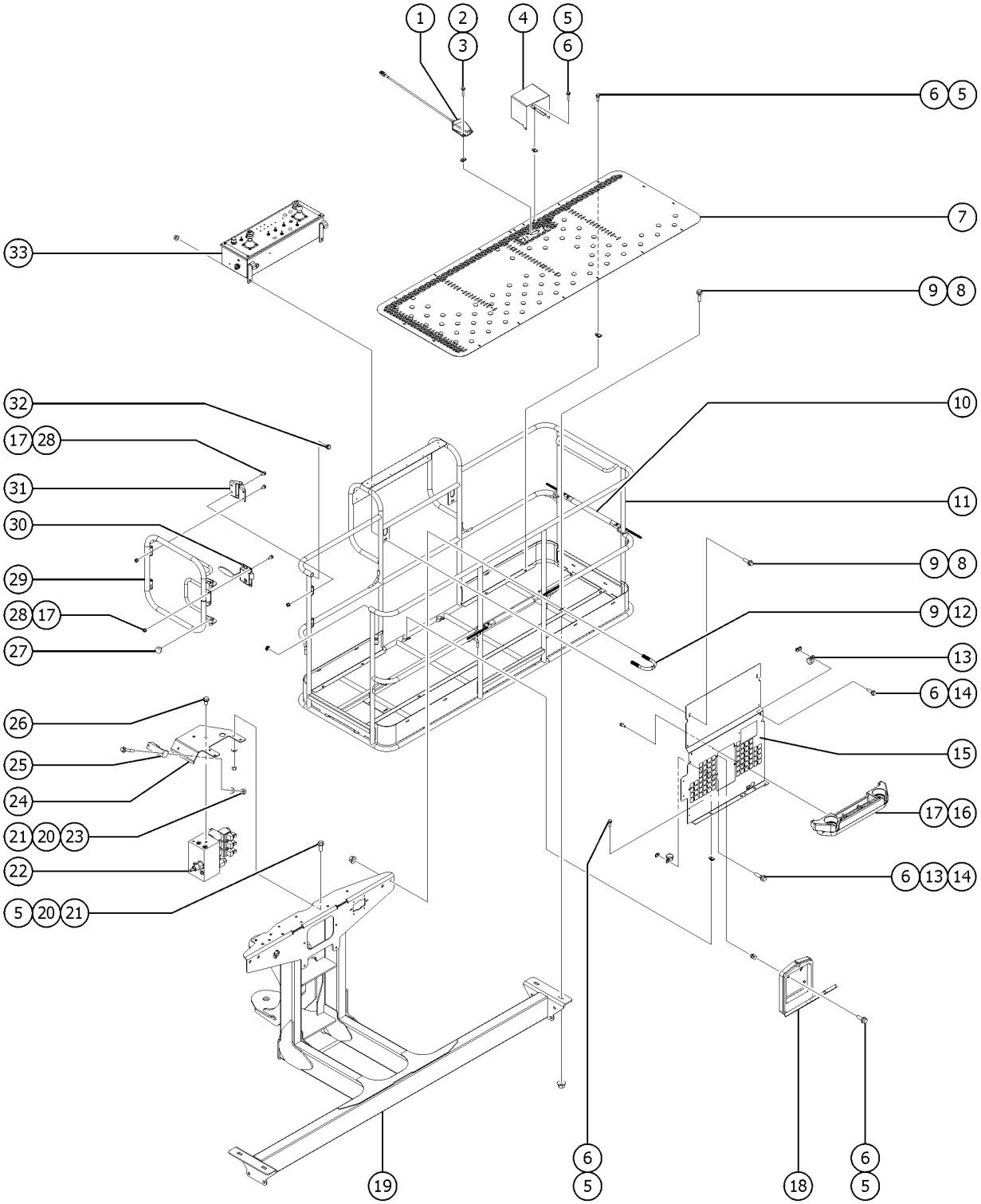

Item	Part No.	Description	Qty.
25-	T115766GT	CLAMP,STRAIN RELIEF,WK LT (Worklight option)	
26	824089GT	SCREW, HHF, 3/8-16 X .75, 8, ZAG	2
27	43392GT	BUMPER,BATTERY BOX & RAILS	2
28	1277924GT	NUT,NYLOCK FLG,1/4-20,F,ZAG for 8' platform	12
28B	824027GT	NUT, TL FLG, 1/4-20, G, ZAG for 6' platform	12
29	1265397GT	WELDMENT, SWING GATE	1
30	1267747GT	LATCH, SWING GATE	1
31	104804GT	HINGE, SPRING, LONG LEG	2
32	55753GT	BUMPER, PLASTIC, 1.25 O.D.	2
33		REF. PLATFORM CONTROL BOX ASSEMBLY (refer to 602.1)	

603.1 Platform Control Box, S-80 XC

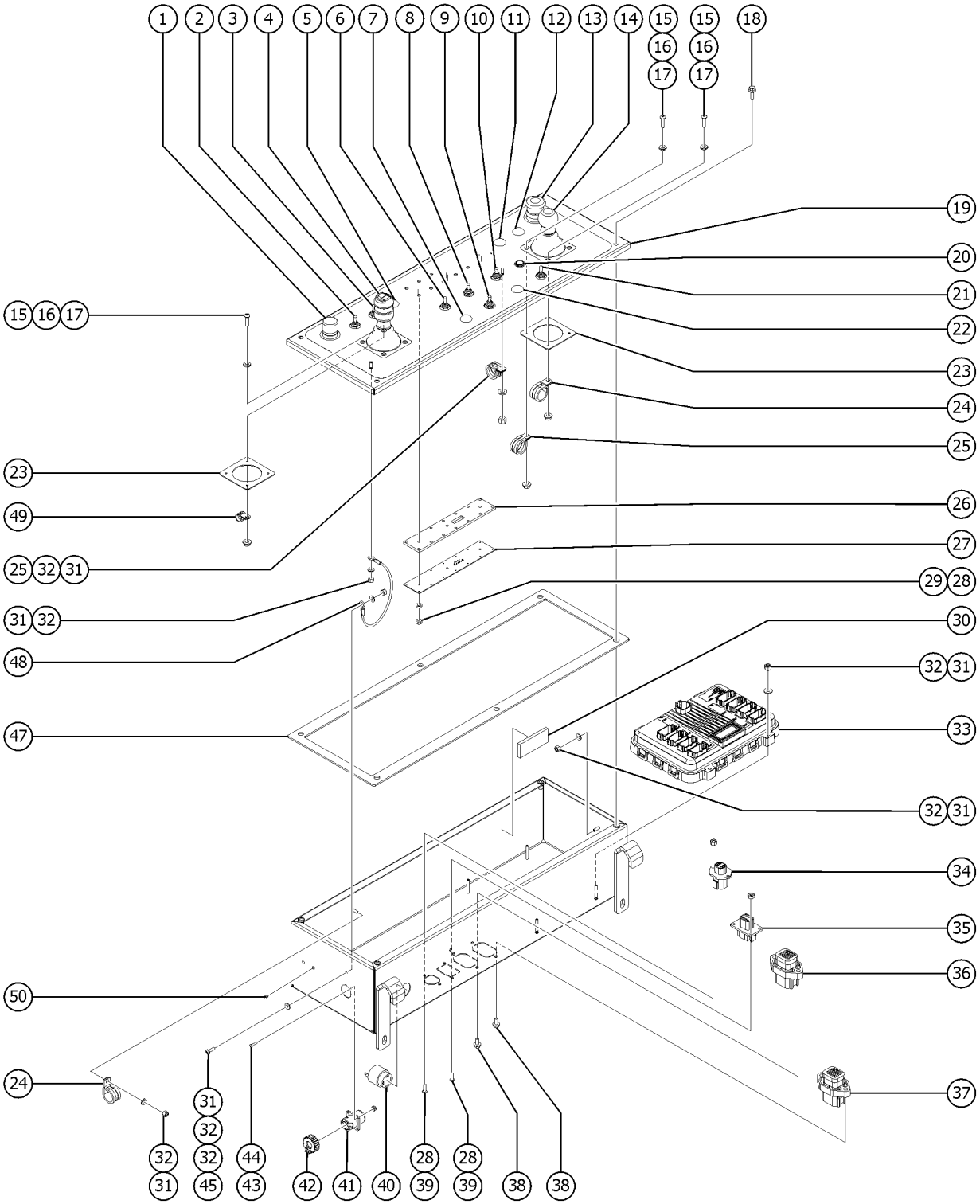

Item	Part No.	Description	Qty.
A	1306210GT	ASSEMBLY, PBOX, S-BOOM, XC, EPL	1
1	66813GT	BUTTON,PUSH,BLACK W/SEAL***	1
1-	66815GT	BASE, W/1 N.O. CONTACTS***	
2	128200GT	SWITCH TOGGLE ASSY SPDT 3P MOM (platform level up/down)	1
3	128200GT	SWITCH TOGGLE ASSY SPDT 3P MOM (platform rotate left /right)	1
4		REF. JOYSTICK refer to 604.1	
5	229567GT	PLUG,SANTOPRENE .5 BLACK DOME	1
6	128200GT	SWITCH TOGGLE ASSY SPDT 3P MOM (engine start)	1
7	229567GT	PLUG,SANTOPRENE .5 BLACK DOME (Deutz TD2011L04i, Deutz 2.9L4 and Perkins 404D-22T)	1
7B	128584-SGT	SWITCH TOGGLE SPDT 2P MNT SHDR (GM 3.0L)	1
8	128203GT	SWITCH TOGGLE ASSY SPDT 2P MOM (emergency power)	1
9	128204GT	SWITCH TOGGLE ASSY SPDT 2P MNT (engine RPM select)	1
10	128204GT	SWITCH TOGGLE ASSY SPDT 2P MNT (drive speed select)	1
11	229567GT	PLUG,SANTOPRENE .5 BLACK DOME	1
11B	128204GT	SWITCH TOGGLE ASSY SPDT 2P MNT (Models with Generator option)	1
12	229567GT	PLUG,SANTOPRENE .5 BLACK DOME	1
12B	128203GT	SWITCH TOGGLE ASSY SPDT 2P MOM (Models with Aircraft Protection package)	1
13	66812GT	BUTTON,PUSH,RED MUSHROOM HEAD	1
13-	146478GT	BOOT(BELLOWS),E-STOP,BLACK	
13-	66817GT	E-STOP W/ NC CONTACT	
14		REF. JOYSTICK Drive joystick needs to be ordered separately; (refer to 604.1)	
15	139338GT	SCREW PH M5-0.8X20 DIN 7500CE	8
16	1269498GT	SHOULDER WASHER, NYLON	8
17	1255753GT	NUT,FLG,M5-0.8,DIN6923,8,ZAB	3
18	824078GT	SCREW,HHF,1/4-20X.75,8,ZAG	4
19	1282472GT	WELDMENT, LID, CONTROLS, PLATFORM	1
20	218165GT	LIGHT,INDICATOR,RED 12V H-BRI	1
21	128200GT	SWITCH TOGGLE ASSY SPDT 3P MOM (drive enable)	1

603.1 Platform Control Box, S-80 XC

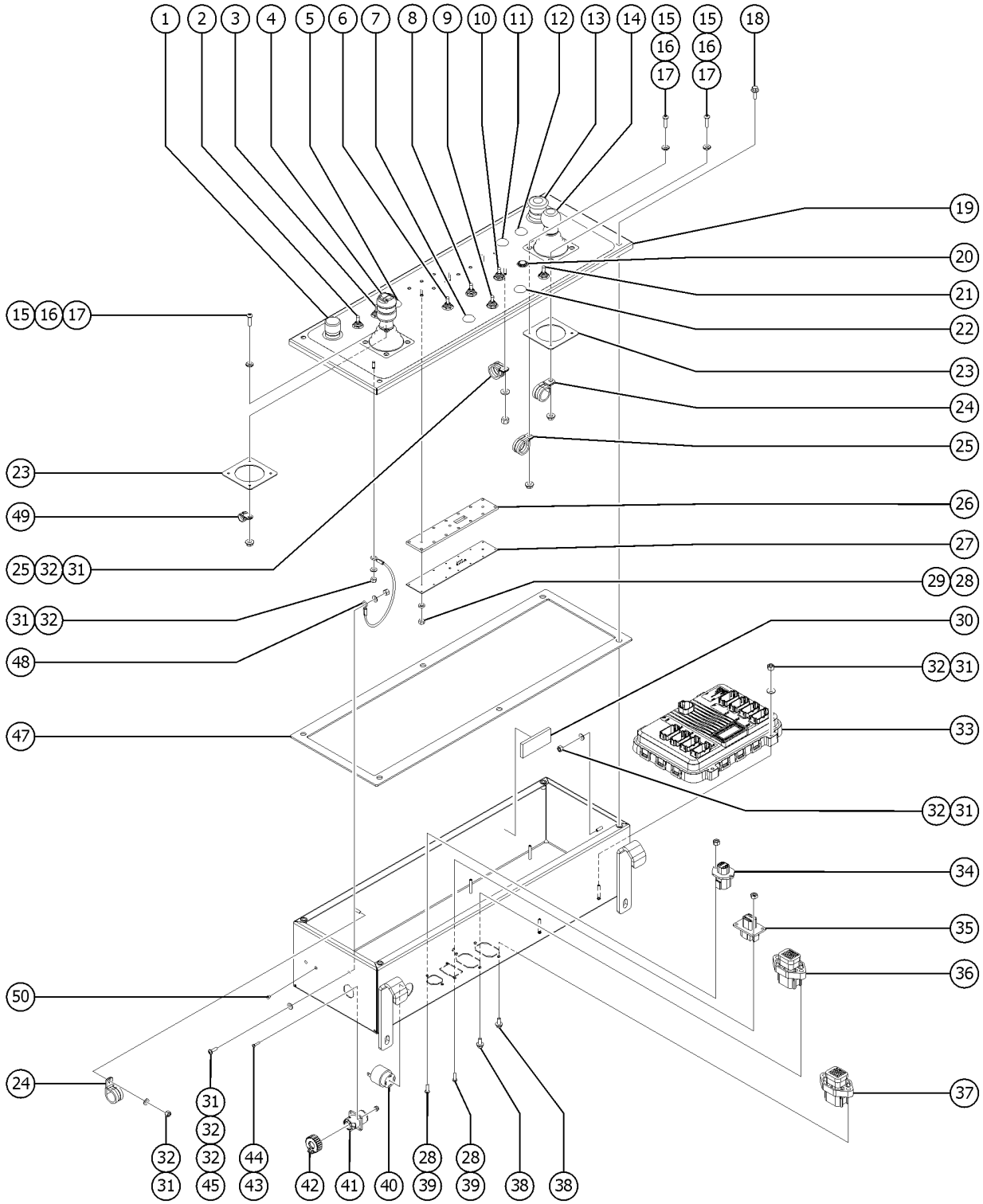

Item	Part No.	Description	Qty.
22	229567GT	PLUG,SANTOPRENE .5 BLACK DOME	1
23	1269497GT	GASKET, ISOLATION, JOYSTICK	2
24	18666GT	CLAMP,1.00,#16 X 1/4,RUB CUSH	3
25	13268GT	CLAMP,0.75,#12 X 1/4,RUB CUSH	2
26	1278613GT	SPACER, XC PLATFORM INDICATORS	1
27	1278612GT	PCBA, XC PLATFORM INDICATORS	1
28	1274164GT	NUT,NYLOCK,6-32,A,ZAG	7
29	822224GT	WASHER, NYLON #10, 0.093	3
30	30997GT	CORROSION INHIBITOR,FOAM to SN S80XCH-9758	1
31	1274168GT	NUT,NYLOCK,10-32,A,ZAG	12
32	1253185GT	WASHER,FLAT,#10,USS,ZAG	13
33	1284524GT	ECU, PLATFORM, S-XC, PROGRAMMED (Contact Genie Parts Sales with full model and SN)	1
34	73717GT	CONN, RECEP, 4 WAY, DEUTSCH, DTP, FLANGE	1
35	87755GT	CONN, RECEP, 8 WAY, DEUTSCH, DT, GRAY/FLANGE	1
36	1265862GT	CONN, RECEP, 18 WAY, DEUTSCH, DTV, GRAY/FLANGE	1
37	226948GT	CONN, RECEP, 18 WAY, DEUTSCH, DTV, BLACK/FLANGE	1
38	218457GT	SCREW,HHF,M5X12,DIN6921,10.9,Z	4
39	824214GT	SCREW,PHPM,6-32X.50,ZAG	4
40	39540GT	ALARM, STEADY TONE***	1
41	1272122GT	CONN, RECEP, 5 WAY, DEUTSCH, HD10	1
42	1272123GT	DUST CAP, RECEPTACLE, 5 WAY, CIRCULAR	1
43	1253477GT	SCREW,PHPM,4-40X.5,ZAG	2
44	40766GT	NUT,NYLOCK,4-40	2
45	1257227GT	SCREW,PHPM,10-32X.625,ZAG	1
46	1279851GT	WELDMENT,BOX,PLATFORM CONTROL,XC	1
47	81488GT	GASKET,PLATFORM CONTROL BOX	1
48	1258952GT	LANYARD, BOX, CONTROL, PLATFORM	2
49	6833GT	CLAMP,0.50,#8 X 1/4,RUB CUSH	1

603.1 Platform Control Box, S-80 XC

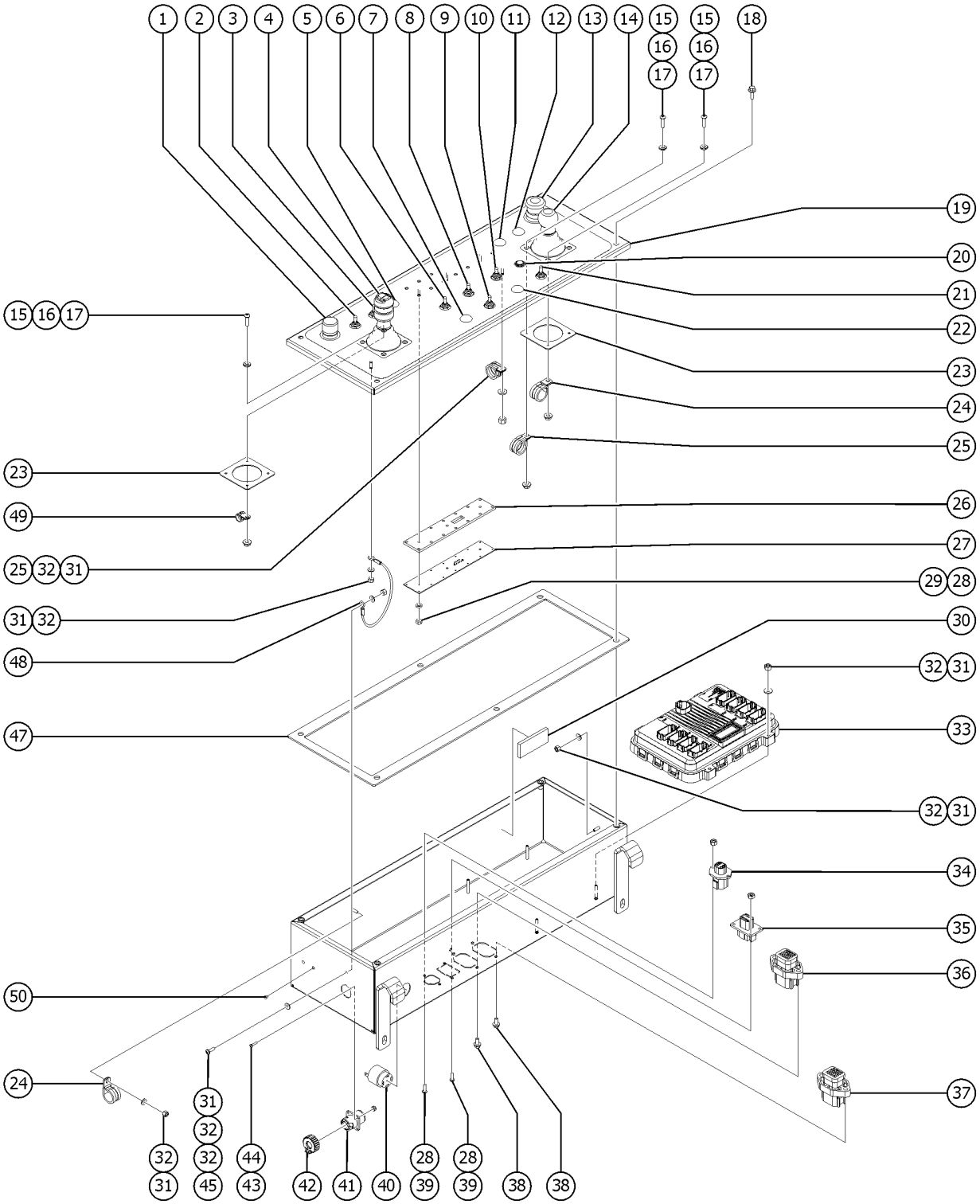

Item	*Part No.*	*Description*	*Qty.*
50	1323761GT	PLUG, NYLON 5.5MM BLACK DOMED from SN S80XCH-303	4

603.2 Platform Control Box, S-85 XC

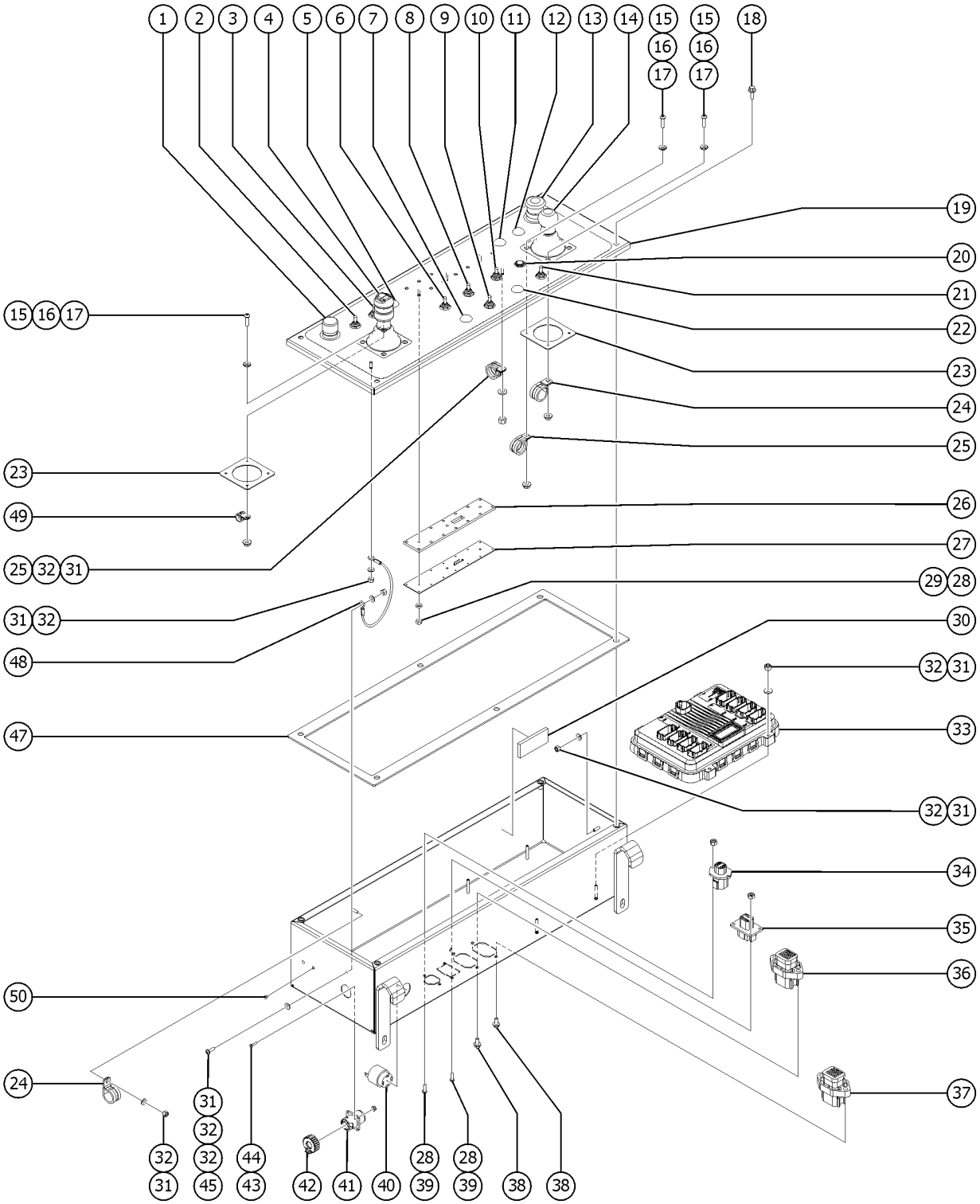

Item	Part No.	Description	Qty.
A		ASSEMBLY, PBOX, S-BOOM, XC contact Genie customer service for this part quotation.	1
1	66813GT	BUTTON,PUSH,BLACK W/SEAL***	1
1-	66815GT	BASE, W/1 N.O. CONTACTS***	
2	128200GT	SWITCH TOGGLE ASSY SPDT 3P MOM (platform level up/down)	1
3	128200GT	SWITCH TOGGLE ASSY SPDT 3P MOM (platform rotate left /right)	1
4		REF. JOYSTICK (refer to 604.1)	
5	128200GT	SWITCH TOGGLE ASSY SPDT 3P MOM (jib up/down)	1
6	128200GT	SWITCH TOGGLE ASSY SPDT 3P MOM (engine start)	1
7	229567GT	PLUG,SANTOPRENE .5 BLACK DOME (Deutz TD2011L04i, Deutz 2.9L4 and Perkins 404D-22T)	1
7B	128584-SGT	SWITCH TOGGLE SPDT 2P MNT SHDR (Fuel select) (GM 3.0L)	1
8	128203GT	SWITCH TOGGLE ASSY SPDT 2P MOM (emergency power)	1
9	128204GT	SWITCH TOGGLE ASSY SPDT 2P MNT (engine RPM select)	1
10	128204GT	SWITCH TOGGLE ASSY SPDT 2P MNT (drive speed select)	1
11	229567GT	PLUG,SANTOPRENE .5 BLACK DOME	1
11B	128204GT	SWITCH TOGGLE ASSY SPDT 2P MNT (Models with Generator option)	1
12	229567GT	PLUG,SANTOPRENE .5 BLACK DOME	1
12B	128203GT	SWITCH TOGGLE ASSY SPDT 2P MOM (Models with Aircraft Protection package)	1
13	66812GT	BUTTON,PUSH,RED MUSHROOM HEAD	1
13-	146478GT	BOOT(BELLOWS),E-STOP,BLACK	
13-	66817GT	E-STOP W/ NC CONTACT	
14		REF. JOYSTICK Drive joystick needs to be ordered separately; (refer to 604.1)	
15	139338GT	SCREW PH M5-0.8X20 DIN 7500CE	8
16	1269498GT	SHOULDER WASHER, NYLON	8
17	1255753GT	NUT,FLG,M5-0.8,DIN6923,8,ZAB	3
18	824078GT	SCREW,HHF,1/4-20X.75,8,ZAG	4
19	1282472GT	WELDMENT, LID, CONTROLS, PLATFORM	1
20	218165GT	LIGHT,INDICATOR,RED 12V H-BRI	1
21	128200GT	SWITCH TOGGLE ASSY SPDT 3P MOM (drive enable)	1

603.2 Platform Control Box, S-85 XC

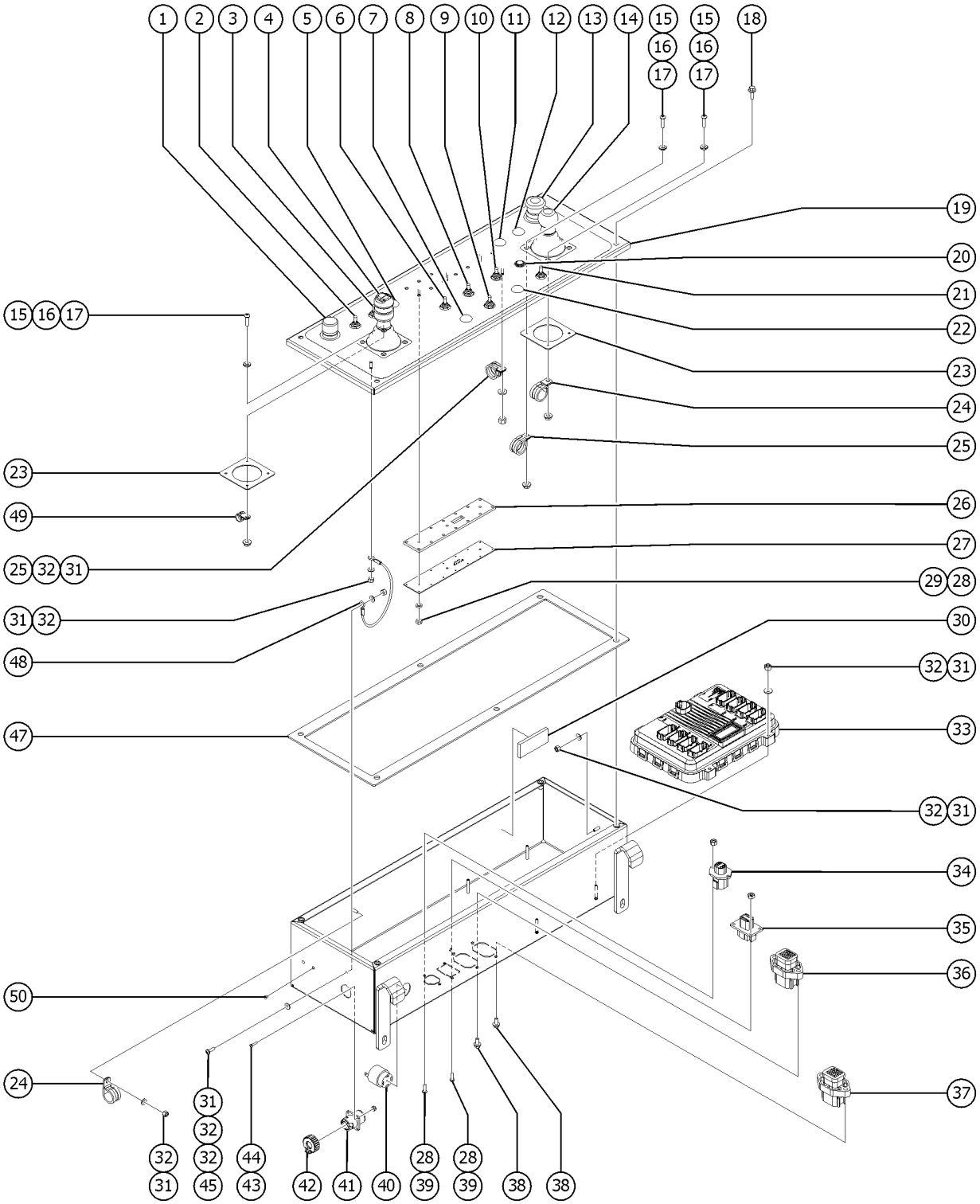

Item	Part No.	Description	Qty.
22	229567GT	PLUG,SANTOPRENE .5 BLACK DOME	1
23	1269497GT	GASKET, ISOLATION, JOYSTICK	2
24	18666GT	CLAMP,1.00,#16 X 1/4,RUB CUSH	3
25	13268GT	CLAMP,0.75,#12 X 1/4,RUB CUSH (No longer used at this location)	2
26	1278613GT	SPACER, XC PLATFORM INDICATORS	1
27	1278612GT	PCBA, XC PLATFORM INDICATORS	1
28	1274164GT	NUT,NYLOCK,6-32,A,ZAG	7
29	822224GT	WASHER, NYLON #10, 0.093	3
30	30997GT	CORROSION INHIBITOR,FOAM to SN S85XCH-9758	1
31	1274168GT	NUT,NYLOCK,10-32,A,ZAG	12
32	1253185GT	WASHER,FLAT,#10,USS,ZAG	13
33	1284524GT	ECU, PLATFORM, S-XC, PROGRAMMED (Contact Genie Parts Sales with full model and SN)	1
34	73717GT	CONN, RECEP, 4 WAY, DEUTSCH, DTP, FLANGE	1
35	87755GT	CONN, RECEP, 8 WAY, DEUTSCH, DT, GRAY/FLANGE	1
36	1265862GT	CONN, RECEP, 18 WAY, DEUTSCH, DTV, GRAY/FLANGE	1
37	226948GT	CONN, RECEP, 18 WAY, DEUTSCH, DTV, BLACK/FLANGE	1
38	218457GT	SCREW,HHF,M5X12,DIN6921,10.9,Z	4
39	824214GT	SCREW,PHPM,6-32X.50,ZAG	4
40	39540GT	ALARM, STEADY TONE***	1
41	1272122GT	CONN, RECEP, 5 WAY, DEUTSCH, HD10	1
42	1272123GT	DUST CAP, RECEPTACLE, 5 WAY, CIRCULAR	1
43	1253477GT	SCREW,PHPM,4-40X.5,ZAG	2
44	40766GT	NUT,NYLOCK,4-40	2
45	1257227GT	SCREW,PHPM,10-32X.625,ZAG	1
46	1279851GT	WELDMENT,BOX,PLATFORM CONTROL,XC	1
47	81488GT	GASKET,PLATFORM CONTROL BOX	1
48	1258952GT	LANYARD, BOX, CONTROL, PLATFORM	2
49	6833GT	CLAMP,0.50,#8 X 1/4,RUB CUSH	1

603.2 Platform Control Box, S-85 XC

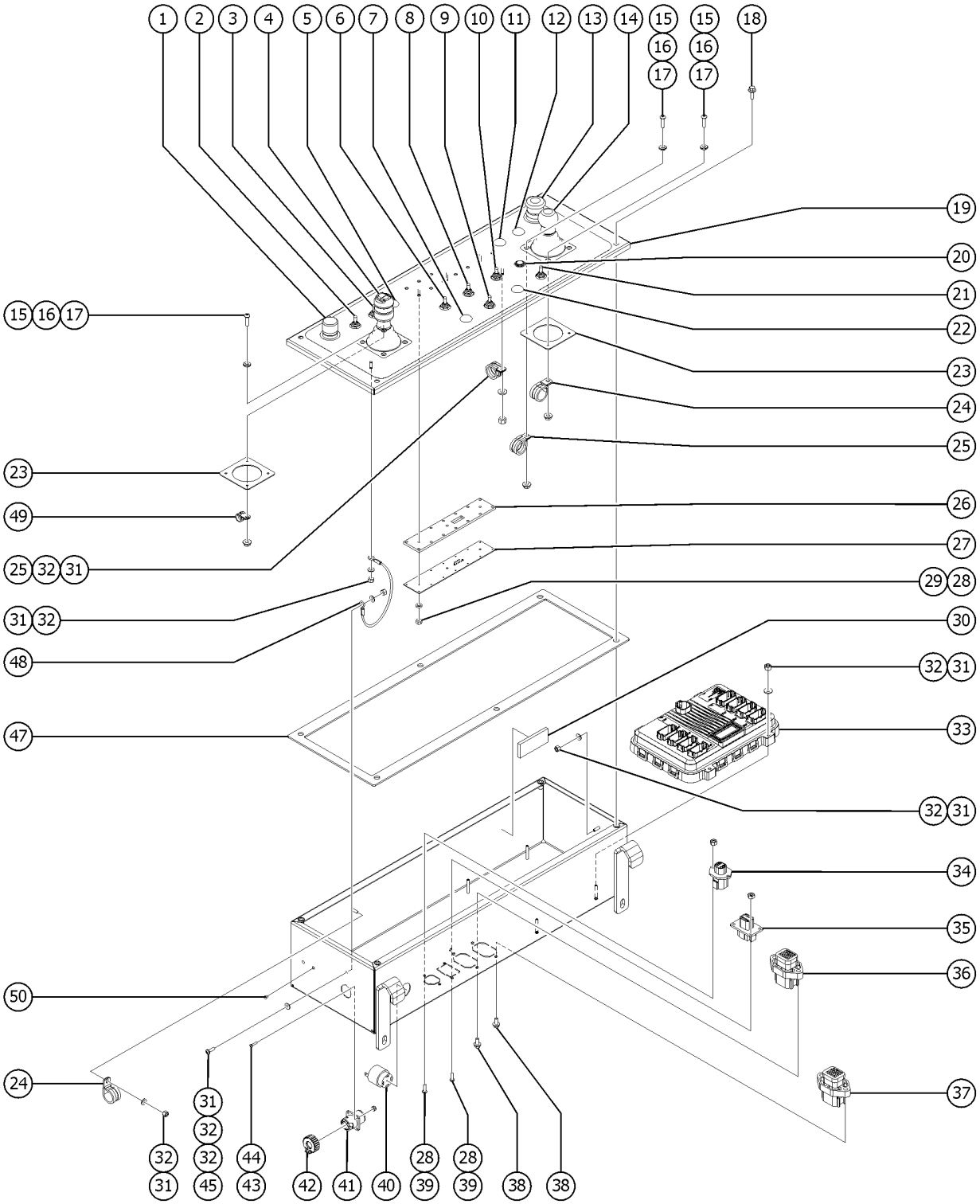

Item	*Part No.*	*Description*	*Qty.*
50	1323761GT	PLUG, NYLON 5.5MM BLACK DOMED from SN S85XCH-4225	4

604.1 Joysticks

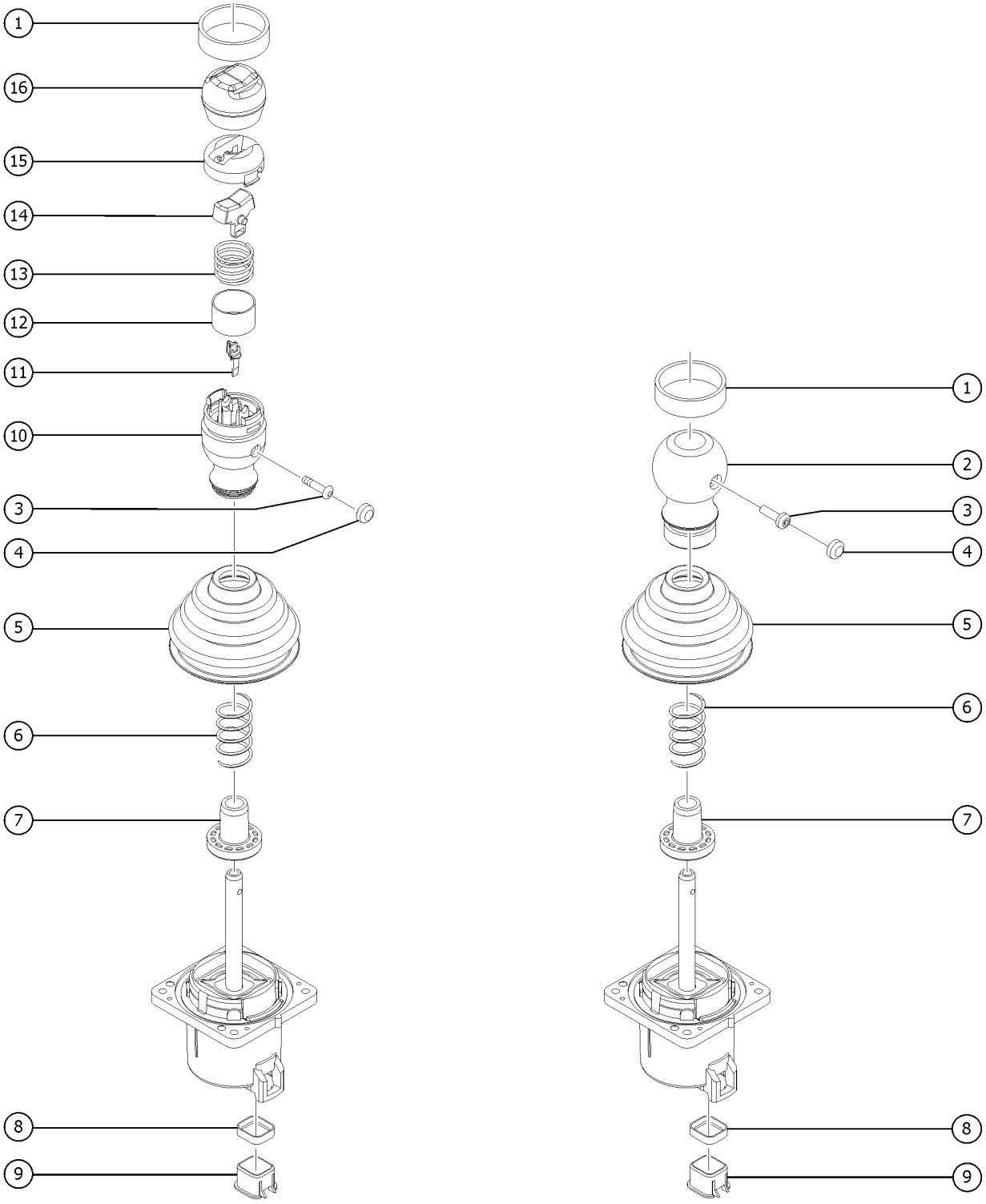

604.1 Joysticks

Item	Part No.	Description	Qty.
A-	1275259GT	JOYSTICK, ISOLATED, 2 AXIS ROCKER ... OEM joystick (calibration required after replacement) includes gasket part 1269497 and shoulder washer part 1269498 (refer to 603.1)	1
B-	1275248GT	JOYSTICK, ISOLATED, 2 AXIS ... OEM joystick (calibration required after replacement) includes gasket part 1269497 and shoulder washer part 1269498 (refer to 603.1)	1
C-	1275258GT	JOYSTICK, ISOLATED, 1 AXIS ROCKER ... OEM joystick (calibration required after replacement) includes gasket part 1269497 and shoulder washer part 1269498 (refer to 603.1)	1
D-	83098GT	TERM,AMP MTE,SOC,22-26 GA BULK	
1	1271713GT	SHRINK TUBE, BLU, 3:1, 40MM	2
2	62392GT	KNOB,JOYSTICK, 62390/62391	1
3	T112626GT	SCREW, PHM, #6-32 X .625 ZINC	1
4	1269499GT	PLUG, JOYSTICK HANDLE	2
5	139598GT	BOOT,JOYSTICK	1
6		SPRING,JOYSTK CENTR,62390/91 (no longer available from supplier)	
7	119915GT	COLLAR,JOYSTICK,CENTER	1
8	128000GT	SEAL, CONNECTOR (DT JOYSTICKS)	1
9	128001GT	SLEEVE,CONNECTOR,DT JOYSTICKS	1
10	75449GT	KNOB,ROCKER JOYSTICK 75565	1
11	75448GT	SUPPORT,SENSOR,JOYSTICK	1
12	75447GT	SWITCH SHIELD,ROCK JOYSTK75565	1
13	75446GT	SPRING,SWITCH CENTERING,75565	1
14	75445GT	ROCKER ASSY.,MAGNETIC 75565	1
15	75444GT	ROCKER,RETAINER, 75565	1
16	75443GT	BOOT, ROCKER JOYSTICK 75565	1

701.1 Traction Manifold

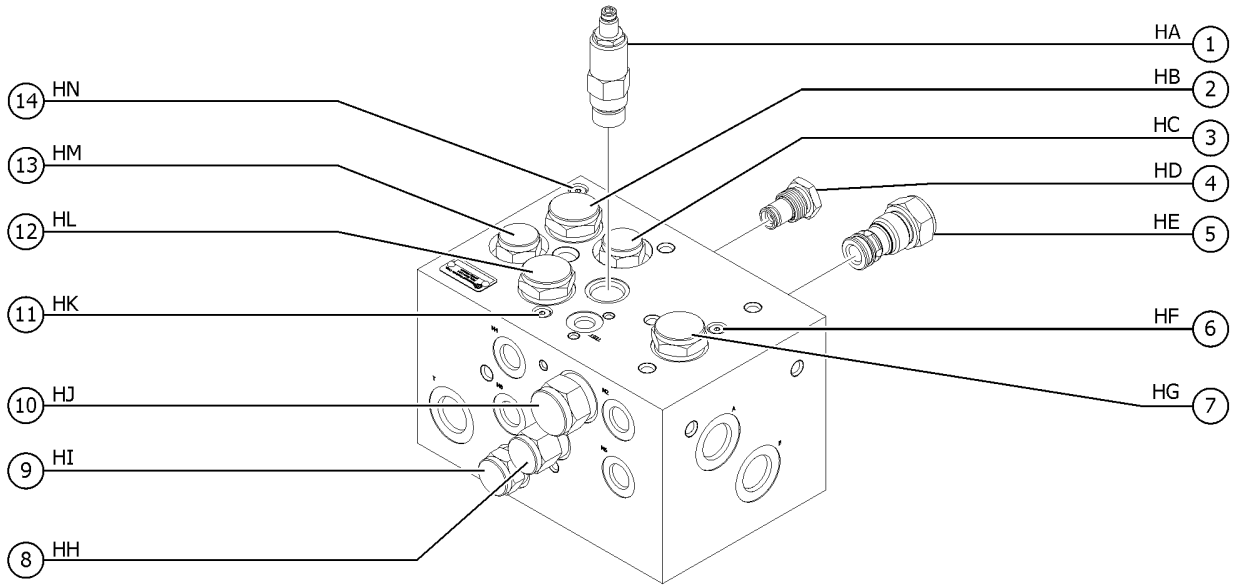

Item	Part No.	Description	Qty.
A	139712GT	MANIFOLD,TRACTION,4WD*** (complete)	
A-	1287434GT	PLUG,SAE #03 (139712) Plug for ORIFICE, 0.040"	
B	28750GT	O-RING KIT,FIELD SVC,ALL PROD*	
C	49612GT	O-RING KIT (ORFS FITTINGS)	
D	33994GT	PLUG AND CAP KIT-SERVICE,37?**	
E	49613GT	PLUG AND CAP KIT-SERVICE,ORFS*	
1	139718GT	VALVE, RELIEF, 280PSI HA, Charge pressure circuit	
1-	139512GT	SEAL KIT, VALVE	
2	139717GT	VALVE, FLOW DIVIDE/COMB,24GPM HB, Controls flow to non-steer end drive motors in forward and reverse.	
2-	139512GT	SEAL KIT, VALVE	
3	139527GT	VALVE, CHECK, 5PSI HC, Steer end drive motor circuit	
3-	139528GT	SEAL KIT, VALVE	
4	139527GT	VALVE, CHECK, 5PSI HD, Non-steer end drive motor circuit	
4-	139528GT	SEAL KIT, VALVE	
5	139716GT	VALVE, CHECK HE, Non-steer end drive motor circuit	
5-	139727GT	SEAL KIT, VALVE	
6	139719GT	ORIFICE, 0.040" HF, Equalizes pressure on both sides of HF, Equalizes pressure of flow divider/combiner valve item 7	
7	139508GT	VALVE, FLOW DIVIDE/COMBINE 1:1 HG, Controls flow to flow divider/combiner valves 2 and 12	
7-	139512GT	SEAL KIT, VALVE	
8	139715GT	VALVE, SHUTTLE, FIXED HH, Steer end drive motor circuit	
8-	139512GT	SEAL KIT, VALVE	
9	139527GT	VALVE, CHECK, 5PSI HI, Steer end drive motor circuit	
9-	139528GT	SEAL KIT, VALVE	
10	139716GT	VALVE, CHECK HJ, Charge pressure circuit that directs hot oil out of low pressure side of drive pump	
10-	139727GT	SEAL KIT, VALVE	
11	139719GT	ORIFICE, 0.040" HK, Equalizes pressure on both sides of the flow divider/combiner valve item 12	
12	139717GT	VALVE, FLOW DIVIDE/COMB,24GPM HL, Controls flow to steer end motors in forward and reverse	
12-	139512GT	SEAL KIT, VALVE	

701.1 Traction Manifold

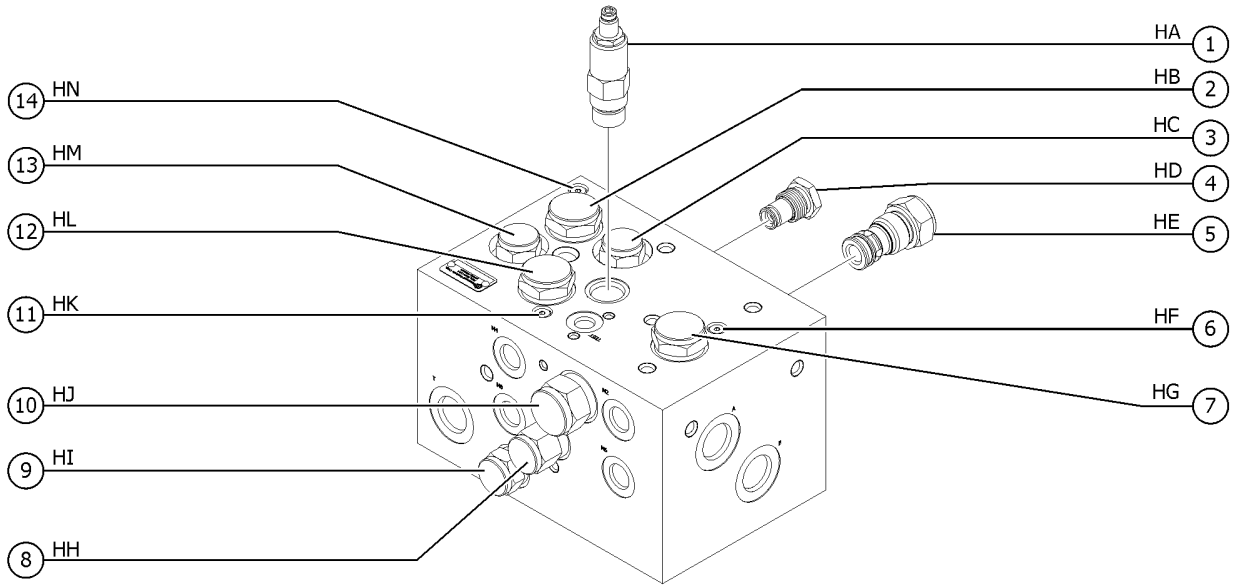

Item	Part No.	Description	Qty.
13	139527GT	VALVE, CHECK, 5PSI HM, Non-steer end drive motor circuit	
13-	139528GT	SEAL KIT, VALVE	
14	139719GT	ORIFICE, 0.040" HN, Equalizes pressure on both sides of flow divider/combiner valve item 2	

702.1 Two-Speed/Brake Manifold

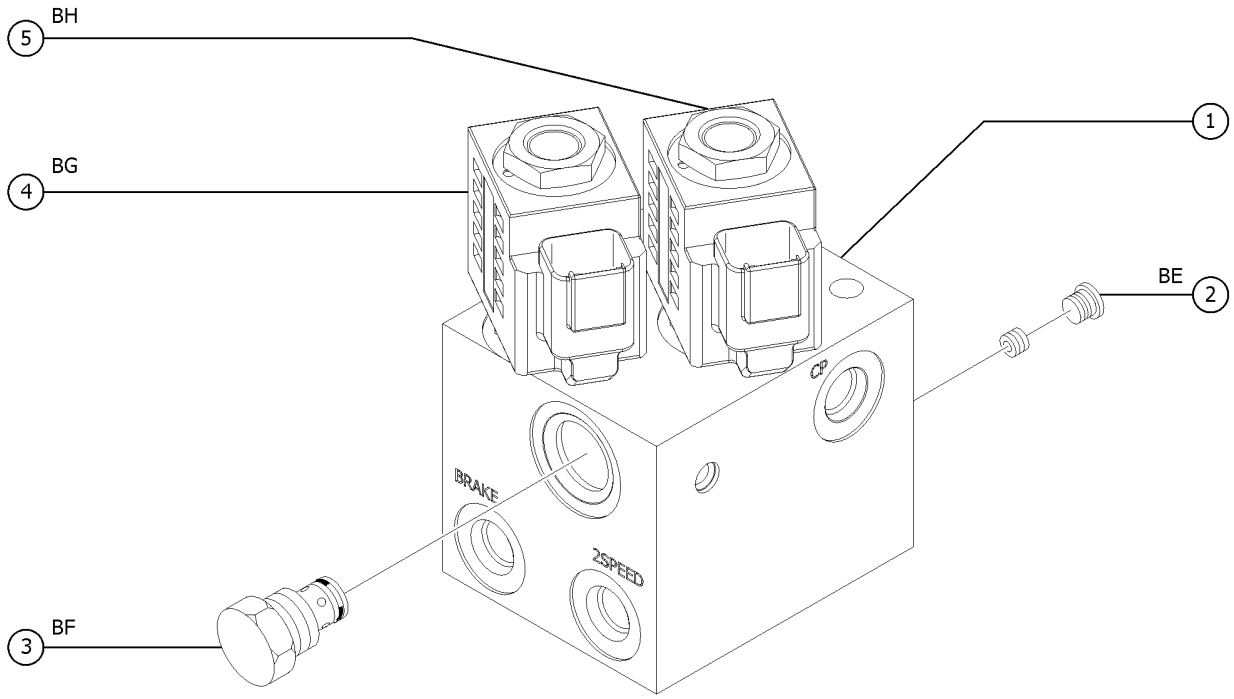

Item	Part No.	Description	Qty.
1	1283179GT	MANIFOLD,BRAKE,2-SPEED (Complete)	
1-	1285623GT	SCREEN KIT (1283179)	
2	219245GT	ORIFICE PLUG .025 DIA. BE, Turntable rotaton brake release	
3	35726GT	VALVE,HYDRAULIC CHECK BF, Brake release circuit	
3-	161145GT	SEAL KIT,CHECK VALVE 219246	
4-	219243GT	COIL, SOLENOID VALVE, 10V BG, Brake release	
4-	161144GT	SEAL KIT,SOLENOID VALVE 219247	
4	219247GT	VALVE, SOLENOID	
4-	94759GT	NUT,SOLENOID	
5	219247GT	VALVE, SOLENOID	
5-	161144GT	SEAL KIT,SOLENOID VALVE 219247	
5-	219243GT	COIL, SOLENOID VALVE, 10V BH, Two speed motor shift;	
5-	94759GT	NUT,SOLENOID	

703.1 Function Enable Valve and Platform Rotator Manifold

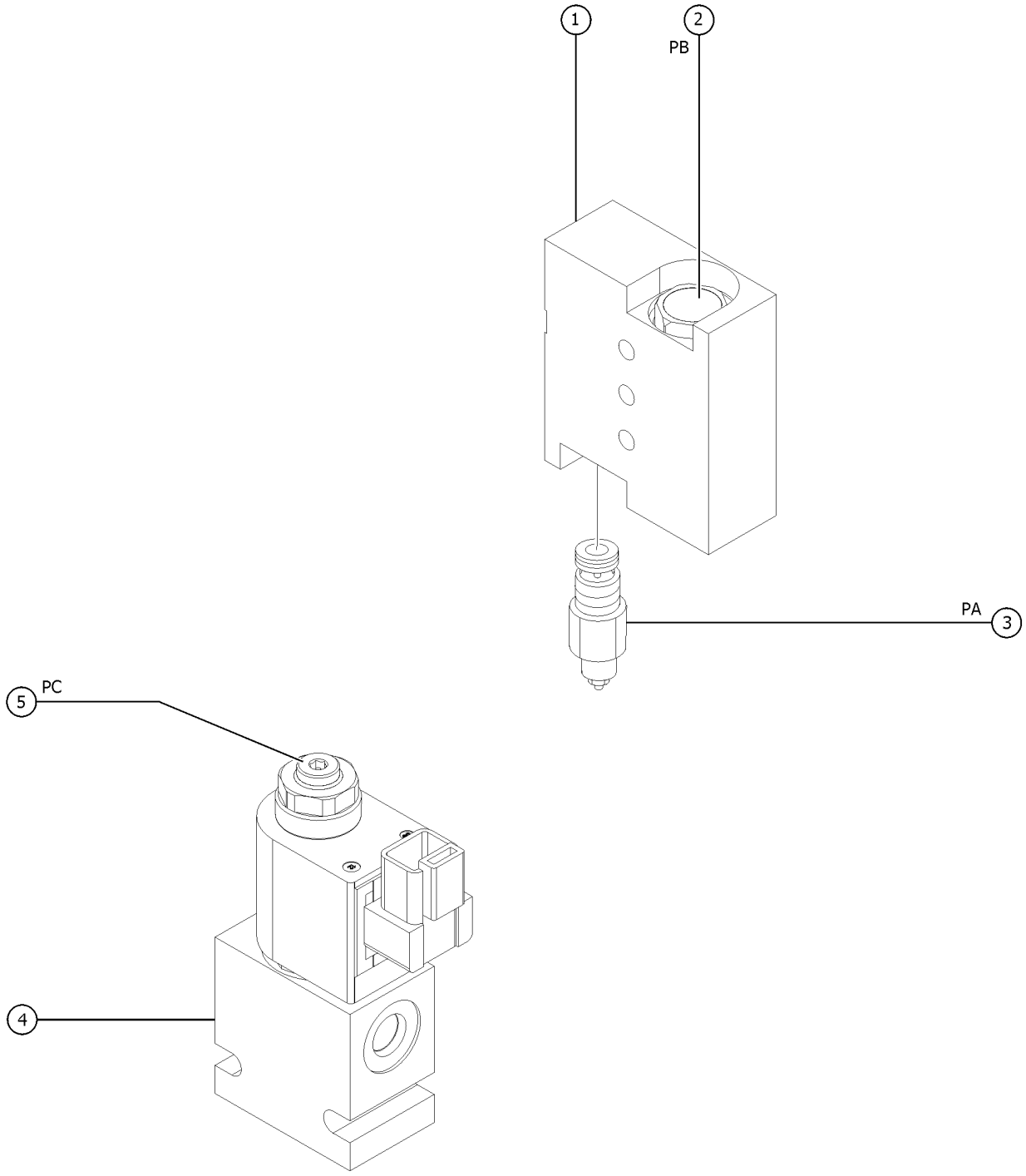

Item	*Part No.*	*Description*	*Qty.*
1	1270810GT	MANIFOLD, ROTATOR, CB (Complete)	
1-	62507GT	O-RING, ROTATOR MANIFOLD	
2	62506GT	VALVE - COUNTERBALANCE** PB, Platform rotate left	
2-	43018GT	SEAL KIT (39345)	
3	62506GT	VALVE - COUNTERBALANCE** PA, Platform rotate right	
3-	43018GT	SEAL KIT (39345)	
4	218144GT	VALVE, FUNCTION ENABLE, ZX135 (Complete)	
5	107742GT	VALVE,SOLENOID 2 POS 2 WAY PC, Differential sensing	
5-	89770GT	SEAL KIT, SOLENOID VALVE	
5-	89733GT	COIL SOLENOID VALVE***	

704.1 Platform Manifold, S-80 XC

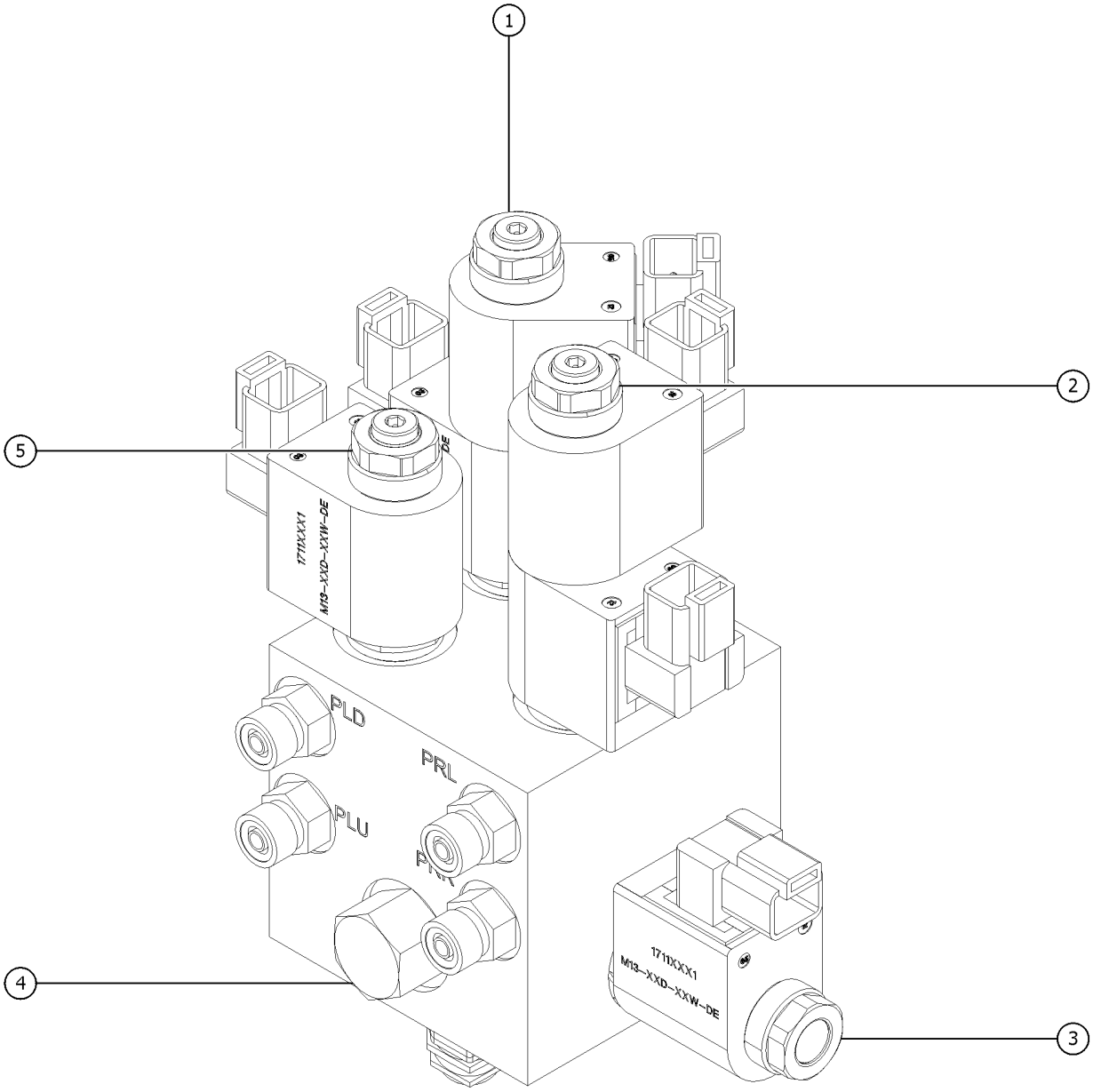

Item	*Part No.*	*Description*	*Qty.*
A	1303390GT	MANIFOLD, E-LEVEL, NON-JIB (Complete)	
1	1314181GT	VALVE, PROPORTIONAL Platform level proportional valve	1
1-	122120GT	SEAL KIT, SOLENOID VALVE	
1-	1314555GT	COIL, SOLENOID VALVE, 20W	
1-	1314556GT	KIT, COIL & NUT	
2	122121GT	SOLENOID VALVE Platform rotate CW/CCW	1
2-	122120GT	SEAL KIT, SOLENOID VALVE	
2-	122148GT	COIL, SOLENOID VALVE,20W	
2-	52943GT	NUT, SOLENOID VALVE COIL	
3	1314182GT	VALVE, SPOOL	1
3-	122120GT	SEAL KIT, SOLENOID VALVE	
3-	122148GT	COIL, SOLENOID VALVE,20W	
3-	106079GT	KIT, COIL & NUT SAUER EDH VALVE	
4	31099GT	VALVE, FLOW REGULATOR Platform rotate flow Control,0.3 gpm	1
4-	74902GT	SEAL KIT, VALVE	
5	1314183GT	VALVE, SPOOL Platform level up/down	1
5-	1314554GT	SEAL KIT, SOLENOID VALVE	
5-	122148GT	COIL, SOLENOID VALVE,20W	
5-	106079GT	KIT, COIL & NUT SAUER EDH VALVE	

705.1 Platform Manifold, S-85 XC

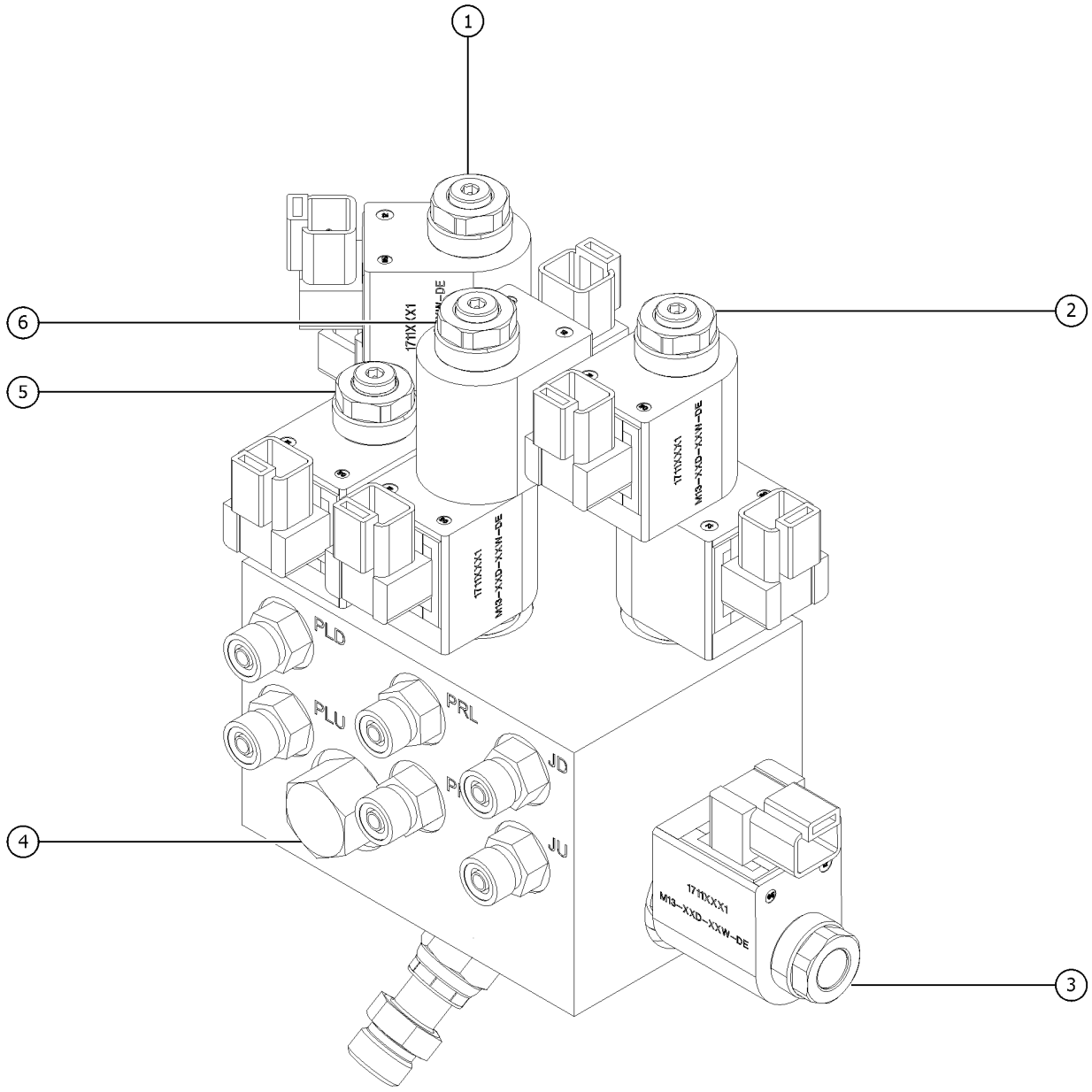

Item	Part No.	Description	Qty.
A	1303389GT	MANIFOLD, E-LEVEL, JIB (Complete)	
1	1314181GT	VALVE, PROPORTIONAL Platform level proportional valve	1
1-	122120GT	SEAL KIT, SOLENOID VALVE	
1-	1314555GT	COIL, SOLENOID VALVE, 20W	
1-	1314556GT	KIT, COIL & NUT	
2	1314181GT	VALVE, PROPORTIONAL Jib up/down	1
2-	122120GT	SEAL KIT, SOLENOID VALVE	
2-	1314555GT	COIL, SOLENOID VALVE, 20W	
2-	1314556GT	KIT, COIL & NUT	
3	1314182GT	VALVE, SPOOL	1
3-	122120GT	SEAL KIT, SOLENOID VALVE	
3-	122148GT	COIL, SOLENOID VALVE,20W	
3-	106079GT	KIT, COIL & NUT SAUER EDH VALVE	
4	31099GT	VALVE, FLOW REGULATOR Platform rotate flow Control,0.3 gpm	1
4-	74902GT	SEAL KIT, VALVE	
5	1314183GT	VALVE, SPOOL Platform level up/down	1
5-	1314554GT	SEAL KIT, SOLENOID VALVE	
5-	122148GT	COIL, SOLENOID VALVE,20W	
5-	106079GT	KIT, COIL & NUT SAUER EDH VALVE	
6	122121GT	SOLENOID VALVE Platform rotate CW/CCW	1
6-	122120GT	SEAL KIT, SOLENOID VALVE	
6-	122148GT	COIL, SOLENOID VALVE,20W	
6-	52943GT	NUT, SOLENOID VALVE COIL	

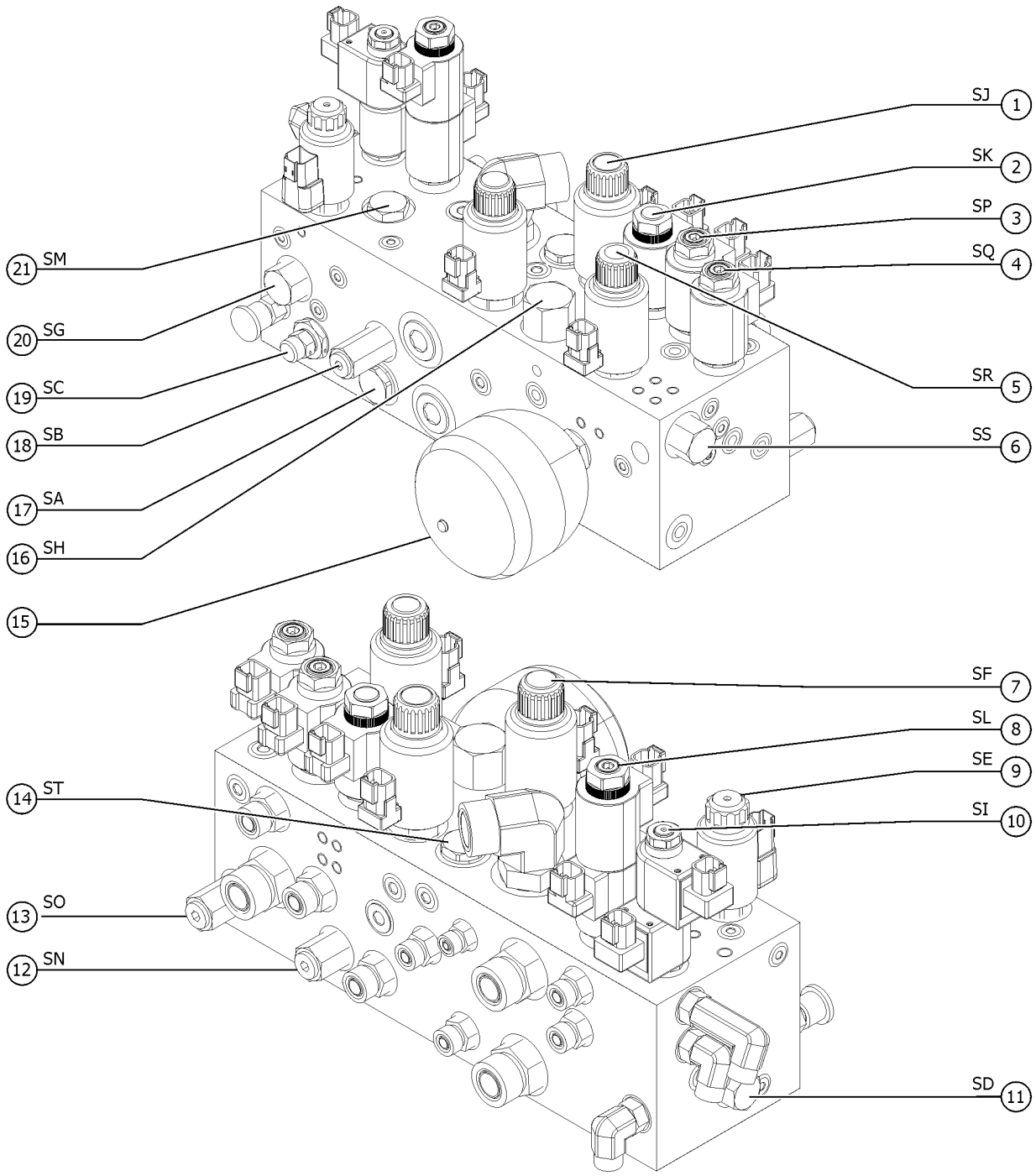
SJ 1
SK 2
SP 3
SQ 4
SR 5
SS 6
SF 7
SL 8
SE 9
SI 10
SD 11
SN 12
SO 13
ST 14
SH 15
SA 16
SB 17
SC 18
SG 19
SM 21

Item	Part No.	Description	Qty.
A-	1312740GT	MANIFOLD,FUNCTION,S80/85 XC (Complete)	
A-	69550GT	PLUG,ORB #4 size 4 plug	
A-	1260124GT	PLUG, 6 SAE, TAPERED, BUNA size 6 plug	
A-	1260125GT	PLUG, 8 SAE, TAPERED, BUNA size 8 plug	
1	122643GT	Valve-Solenid 2 Postion 3WA (SJ, Boom up)	
1-	122652GT	COIL, D14E 10 VDC DED	
1-	45921GT	RETAINER-N.C.PROPOR.SOLENOID	
1-	110198GT	SEAL KIT, VALVE, #12	
2	231034GT	SOLENOID VALVE,3-WAY,2-POS	1
2-	237234GT	SEAL KIT,VALVE	
2-	111778GT	COIL,10V DC(D10,26 WATT)	
2-	119116GT	NUT,COIL (107745)	
3	122649GT	VALVE,SOLENOID,NO,POPPET (SP, Retract)	
3-	111778GT	COIL,10V DC(D10,26 WATT)	
3-	102940GT	NUT,SOLENOID VALVE	
3-	122657GT	SEAL KIT	
4	122649GT	VALVE,SOLENOID,NO,POPPET (SP, Extend)	
4-	111778GT	COIL,10V DC(D10,26 WATT)	
4-	102940GT	NUT,SOLENOID VALVE	
4-	122657GT	SEAL KIT	
5	107753GT	VALVE,PROPORTIONAL (SR, Extend/Retract proportional)	
5-	58303GT	COIL,VALVE,PROPORTIONAL***	
5-	45912GT	NUT,SOLENOID VALVE 2P3W	
5-	89310GT	SEAL KIT, SOLENOID VALVE	
6	122651GT	VALV, DIFFERENTIAL SENSING (SS, Boom extend)	
6-	122657GT	SEAL KIT	
7	107752GT	VALVE,PROPORTIONAL (SF, Boom up/down proportional)	
7-	58303GT	COIL,VALVE,PROPORTIONAL***	

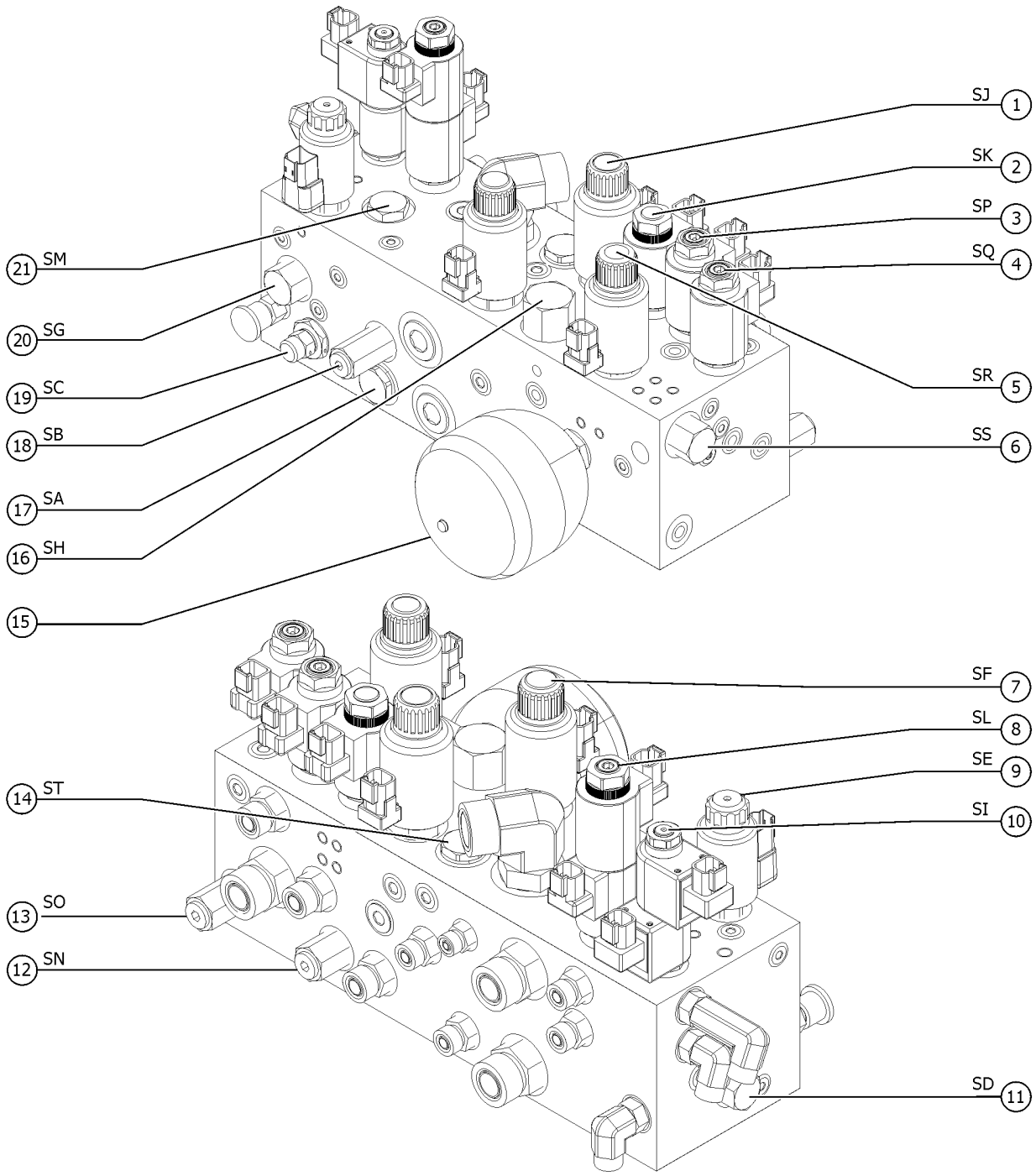
SJ 1
SK 2
SP 3
SQ 4
SR 5
SS 6
SF 7
SL 8
SE 9
SI 10
SD 11
SN 12
SO 13
ST 14
15
SH 16
SA 17
SB 18
SC 19
SG 20
SM 21

Item	Part No.	Description	Qty.
7-	45921GT	RETAINER-N.C.PROPOR.SOLENOID	
7-	110198GT	SEAL KIT, VALVE, #12	
8	122647GT	SOLENOID VALVE SPOOL TYPE (SL, Steering directional)	
8-	111778GT	COIL,10V DC(D10,26 WATT)	
8-	122653GT	Coil Nut	
8-	122657GT	SEAL KIT	
9	102528GT	VALVE,PROPORTIONAL (SE, Swing proportional)	
9-	89737GT	COIL, PROPORTIONAL VALVE***	
9-	89738GT	NUT, PROPORTIONAL VALVE	
9-	89312GT	SEAL KIT, SOLENOID VALVE	
9-	102526GT	O-RING, PROPORTIONAL VALVE (between coil and nut)	
10	122645GT	SOLENOID VALVE,SPOOL TYPE (SI, Swing directional)	
10-	89733GT	COIL SOLENOID VALVE***	
10-	102940GT	NUT,SOLENOID VALVE	
10-	122120GT	SEAL KIT, SOLENOID VALVE	
11	19060GT	VALVE,FLOW REGULATOR (SD, Oscilate flow control)	
11-	74902GT	SEAL KIT, VALVE	
12	77501GT	VALVE,RELIEF 2600 PSI (70242) (SN, Boom down relief)	
12-	74902GT	SEAL KIT, VALVE	
13	110209GT	VALVE, RELIEF, 2400 PSI (SO, Boom extend relief)	
13-	74902GT	SEAL KIT, VALVE	
14	122656GT	VALVE, CHECK, 30 PSI (ST, Return check valve)	
14-	110194GT	SEAL KIT, VALVE, #10	
15	1312118	ACCUMULATOR, 30CU.IN, 725 PSI	
16	122650GT	VALV, DIFFERENTIAL SENSING (SH, Primary lift)	
16-	122660GT	Seal Kit	
17	122646GT	BYPASS VALVE RELIEF (SA, Back flow check function pump)	
17-	110194GT	SEAL KIT, VALVE, #10	

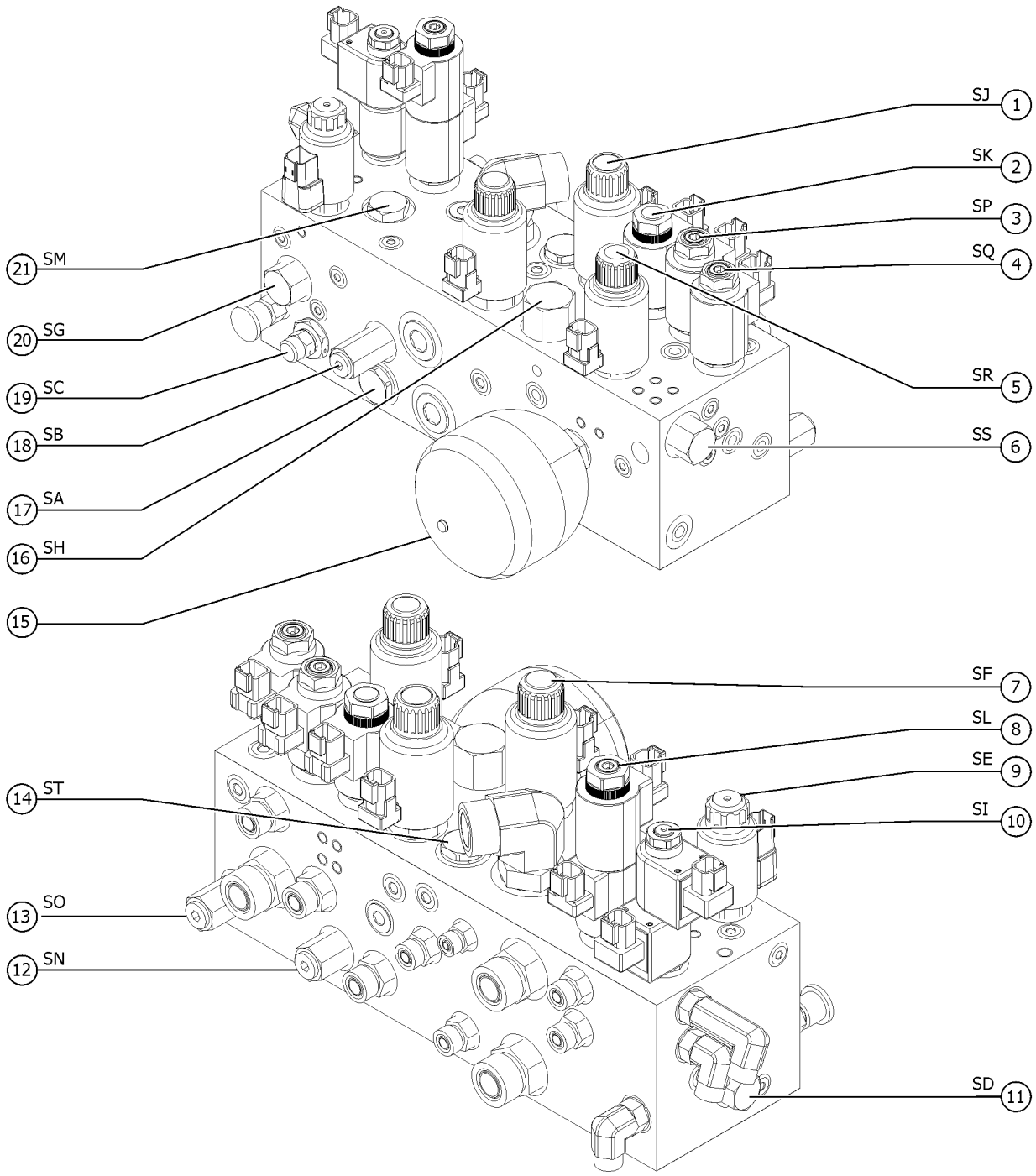
SJ 1
SK 2
SP 3
SQ 4
SR 5
SS 6
SF 7
SL 8
SE 9
SI 10
SD 11
SN 12
SO 13
ST 14
15
SH 16
SA 17
SB 18
SC 19
SG 20
SM 21

Item	*Part No.*	*Description*	*Qty.*
18	52715GT	VALVE,RELIEF 3200 PSI (SB, System main relief)	
18-	74902GT	SEAL KIT, VALVE	
19	122644GT	PRESSURE REDUCING VALVE (SC, Oscilate pressure control)	
19-	122657GT	SEAL KIT	
20	52714GT	VALVE,DIFFERENTIAL SENSING (SG, Differential sensing. TT rotate)	
20-	74902GT	SEAL KIT, VALVE	
21	122641GT	VALVE,FLOW REGULATOR (SM, Steering flow control)	
21-	74902GT	SEAL KIT, VALVE	

707.1 Generator Manifold

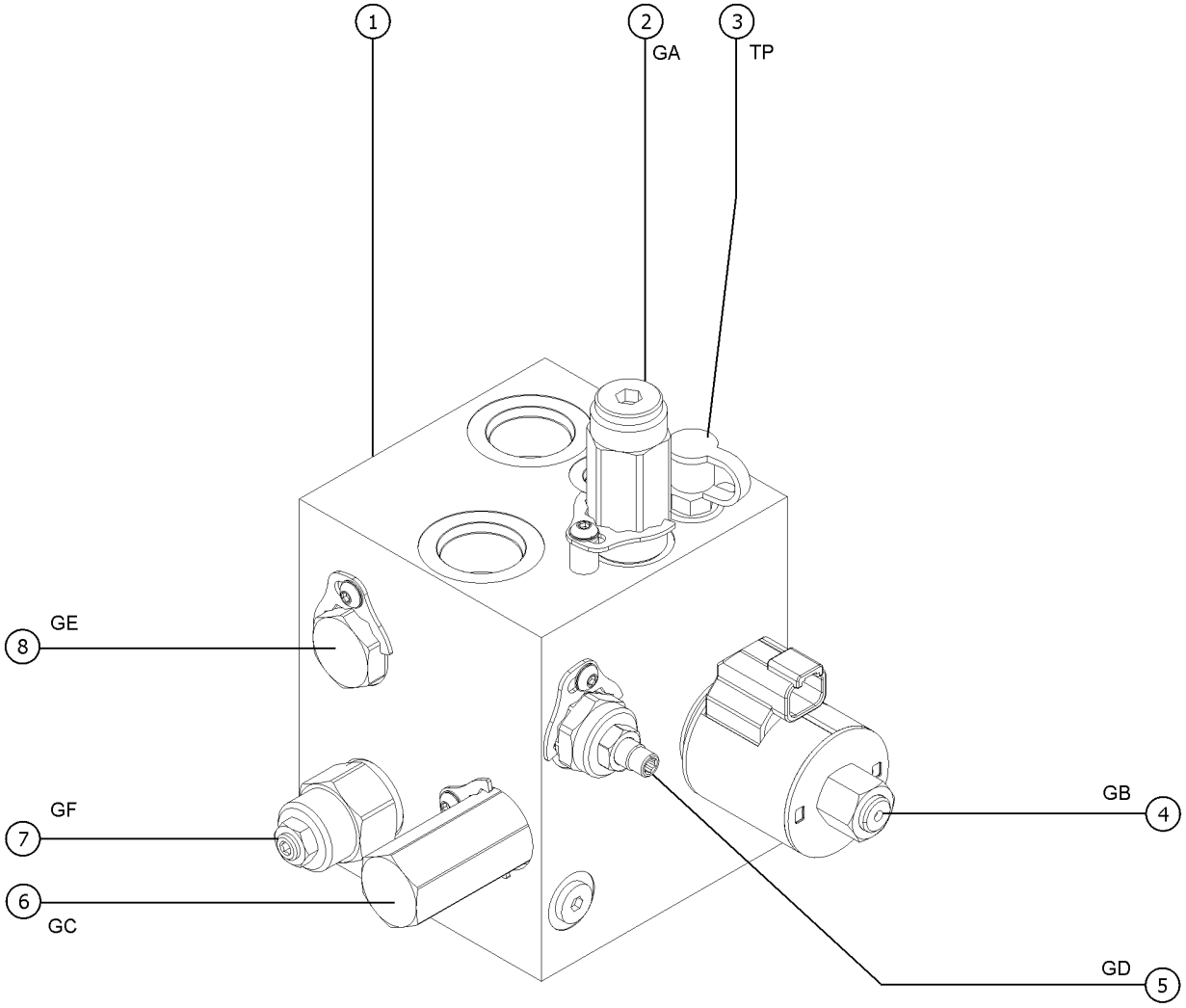

707.1 Generator Manifold

Item	Part No.	Description	Qty.
A	115048GT	#6 PLUG	3
A	1285147GT	PLUG, PORT, SAE4, 6103004	1
1	1281789GT	MANIFOLD, HYD, LIFT POWER, WELDER GENERATOR (Complete)	1
2	1285141GT	VALVE, RELIEF, RV50-26H-0-P-50/36	1
2-	1285145GT	KIT, LOCKDOWN, HYD VALVE, 5965000.1000M	
3	48997GT	NIPPLE,DIAGNOSTIC,#4	1
3-	48880GT	CAP,DIAGNOSTIC NIPPLE	
4	1285143GT	VALVE, SOLENOID, HSV10-21-0-U-0	1
4-	97469GT	COIL#10 E-COIL,10V ZENER DIODE	
4-	1285144GT	KIT, LOCKDOWN, HYD VALVE, 5965000.1063	
5	1285142GT	VALVE, NEEDLE, NV10-22A-0-N	1
5-	1285146GT	KIT, LOCKDOWN, HYD VALVE, 5965000.1000	
6	75462GT	VALVE,DIFFERENTIAL SENSE230PSI	1
6-	62337GT	SEAL KIT, VALVE	
6-	1285146GT	KIT, LOCKDOWN, HYD VALVE, 5965000.1000	
7	1284399GT	VALVE, COUNTERBALANCE, 3:1 1000PSI, CBEA-LIN	1
8	62127GT	VALVE-CHECK,SIZE 10(59599)	1
8-	1285146GT	KIT, LOCKDOWN, HYD VALVE, 5965000.1000	

708.1 Pumps

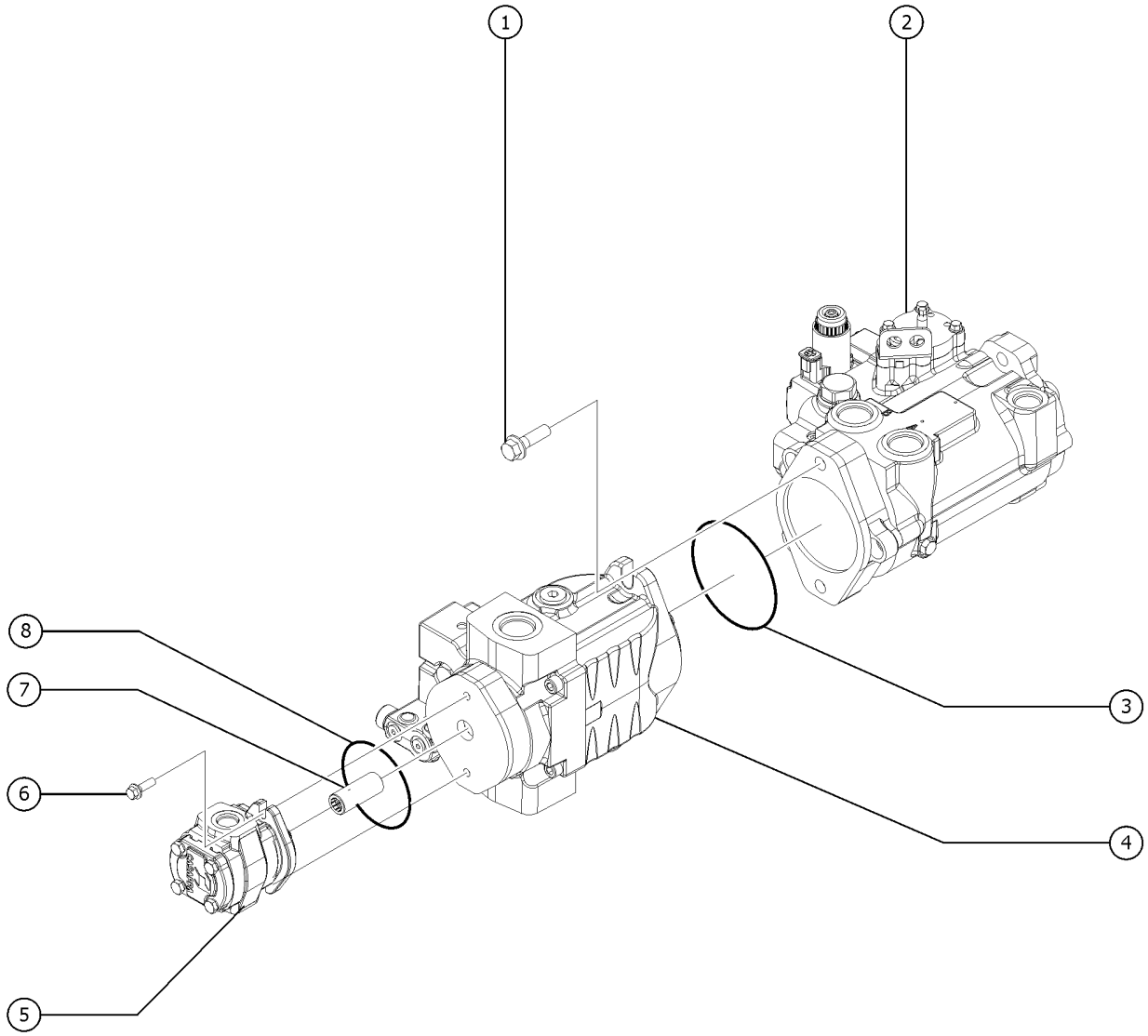

Item	*Part No.*	*Description*	*Qty.*
1	826171GT	SCREW,HHF,1/2-13X1.75,ZAG	2
2	1270946GT	PUMP, DRIVE, M46 HC	1
2-	29739GT	SEAL KIT,SAUER-DANFOSS M46***	
2-	1272536GT	KIT, EDC REPLACEMENT, SAUER M46	
3	52087GT	O-RING,2-044 BUNA***	1
4	1280967GT	PUMP, FUNCTION, 38CC LS, 12V PASSTHRU	1
5	139799GT	PUMP,LIFT,1 SECTION (Welder and 3K generator Option)	1
5-	147550GT	KIT, SEAL, PUMP, 1 SECTION (Welder and 3K generator Option)	
6	824091GT	SCREW, HHF, 3/8-16 X 1.25, 8, ZAG (Welder and 3K generator Option)	2
7	1284038GT	COUPLER,SPLINED,11 TOOTH, K FRAME (Welder and 3K generator Option)	1
8	83141GT	O-RING, .103 X 3.237, NBR/NTRL, 90D	1

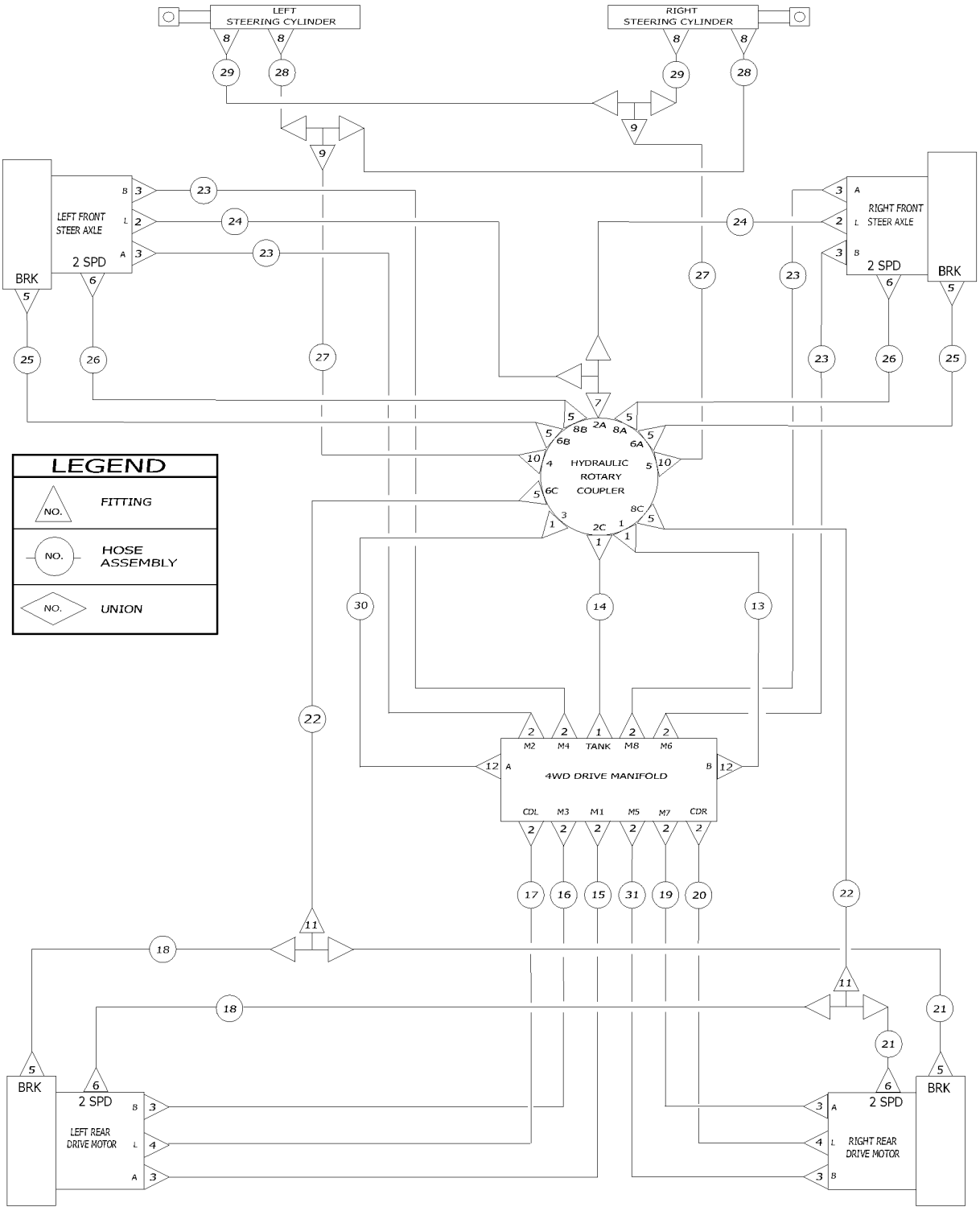
LEFT STEERING CYLINDER
RIGHT STEERING CYLINDER
LEFT FRONT STEER AXLE
2 SPD
BRK
RIGHT FRONT STEER AXLE
2 SPD
BRK
HYDRAULIC ROTARY COUPLER
4WD DRIVE MANIFOLD
TANK
M2
M4
M8
M6
CDL
M3
M1
M5
M7
CDR
LEFT REAR DRIVE MOTOR
2 SPD
BRK
RIGHT REAR DRIVE MOTOR
2 SPD
BRK
LEGEND
NO.
FITTING
NO.
HOSE ASSEMBLY
NO.
UNION

Item	Part No.	Description	Qty.
1	48960GT	FITTING,CONN,520120-12***	4
2	48933GT	CONN,520120-8***	12
3	48948GT	CONN,520120-8-12	8
4	48932GT	FITTING,ELBOW,90D,520220-8***	2
5	48905GT	CONNECTOR, 520120-4	10
6	48911GT	ELBOW,90D,520220-4-6***	4
7	48936GT	TEE,BRANCH,520429-8	1
8	48915GT	ELBOW,90D,520220-6	4
9	89449GT	FITTING, BRANCH BULKHEAD	2
10	48916GT	CONN, 520120-6	2
11	48909GT	TEE,BULKHEAD,RUN,520958-4	2
12	48959GT	FITTING,ELBOW,90D,520220-12	2
13	89871-2448GT	HOSE ASSY,3/4,STR FEM,STR FEM	1
14	49149-2526GT	HOSE ASSY,3/4,STR FEM,STR FEM	1
15	75278-4829GT	HOSE ASSY,1/2,90 FEM,STR FEM	1
16	75278-5229GT	HOSE ASSY,1/2,90 FEM,STR FEM	1
17	49183-5092GT	HOSE ASSY,1/2,STR FEM,STR FEM*	1
18	49119-4578GT	HOSE ASSY,1/4,STR FEM,STR FEM	2
19	75278-4729GT	HOSE ASSY,1/2,90 FEM,STR FEM	1
20	49183-4692GT	HOSE ASSY,1/2,STR FEM,STR FEM	1
21	49117-5391GT	HOSE ASSY,1/4,90 FEM,STR FEM	2
22	49116-3137GT	HOSE ASSY,1/4,45 FEM,STR FEM	2
23	81812-14692GT	ASSY, HOSE, HYD, -8, 4250, STR, STR	4
24	49141-11463GT	ASSY,HOSE,HYD,-6,3000,STR,STR	2
25	49117-11491GT	HOSE ASSY,1/4,90 FEM,STR FEM**	2
26	49119-11378GT	HOSE ASSY,1/4,STR FEM,STR FEM	2
27	49130-2957GT	HOSE ASSEMBLY,3/8	2
28	49128-2409GT	HOSE ASSEMBLY,3/8"	2

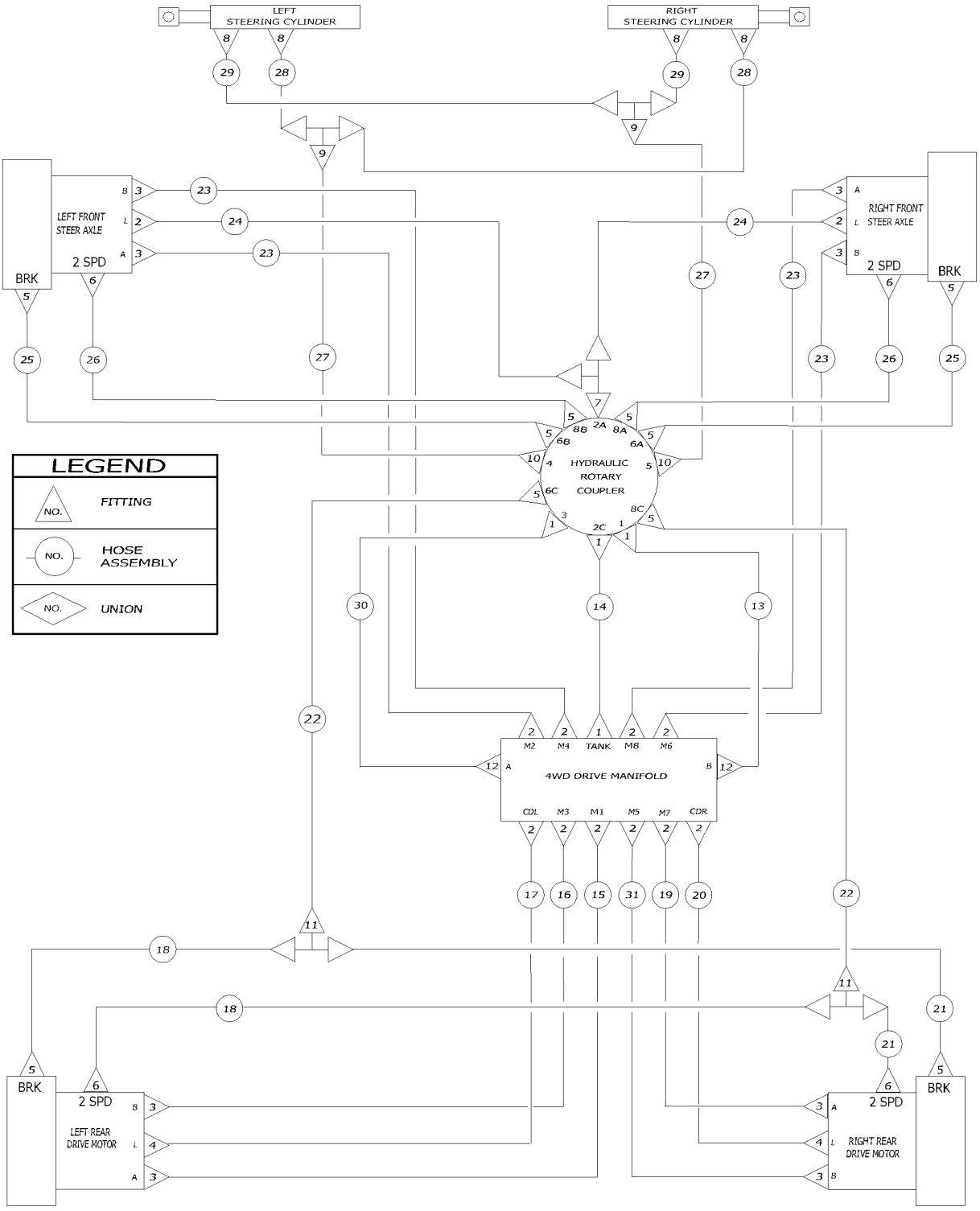
LEFT STEERING CYLINDER
RIGHT STEERING CYLINDER
LEFT FRONT STEER AXLE
2 SPD
BRK
RIGHT FRONT STEER AXLE
2 SPD
BRK
HYDRAULIC ROTARY COUPLER
4WD DRIVE MANIFOLD
M2 M4 TANK M8 M6
CDL M3 M1 M5 M7 CDR
LEFT REAR DRIVE MOTOR
2 SPD
BRK
RIGHT REAR DRIVE MOTOR
2 SPD
BRK
LEGEND
NO. FITTING
NO. HOSE ASSEMBLY
NO. UNION

Item	Part No.	Description	Qty.
29	49128-3709GT	HOSE ASSEMBLY,3/8"	2
30	49117-4891GT	HOSE ASSY,1/4,90 FEM,STR FEM	1
31	75278-5029GT	HOSE ASSY,1/2,90 FEM,STR FEM	1

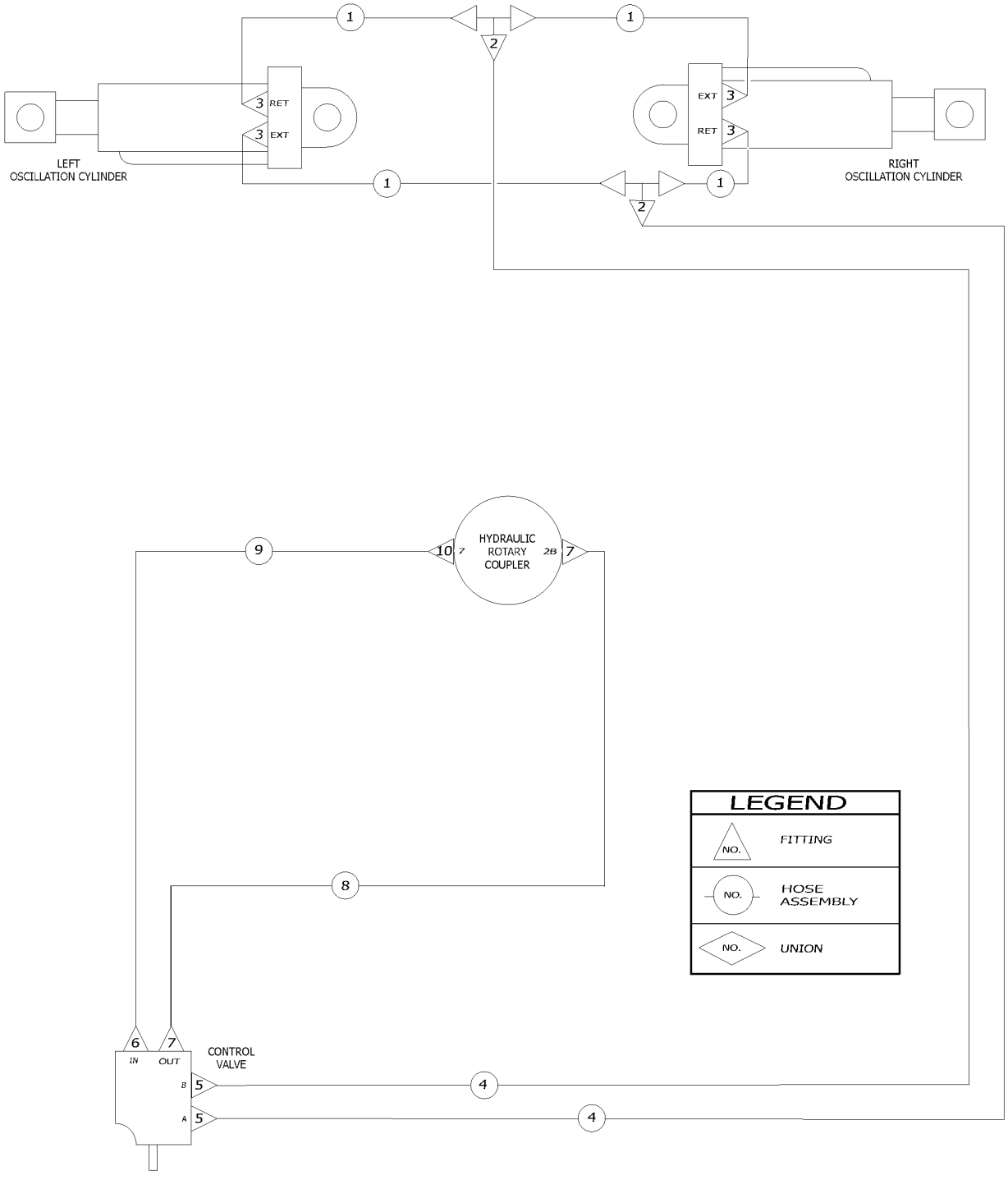
1
1
2
3 RET
3 EXT
LEFT
OSCILLATION CYLINDER
EXT 3
RET 3
RIGHT
OSCILLATION CYLINDER
1
1
2
9
10 7
HYDRAULIC
ROTARY
COUPLER
2B 7
8
6 IN
7 OUT
CONTROL
VALVE
B 5
A 5
4
4
LEGEND
NO.
FITTING
NO.
HOSE
ASSEMBLY
NO.
UNION

Item	Part No.	Description	Qty.
1	49128-4209GT	HOSE ASSY,3/8,90D	4
2	89449GT	FITTING, BRANCH BULKHEAD	2
3	48920GT	ELBOW,45D,520320-6	4
4	49130-8382GT	HOSE ASSY,FEM SW,6-6	2
5	48915GT	ELBOW,90D,520220-6	2
6	48914GT	CONN,520120-4-8	1
7	48930GT	CONN,520120-6-8	2
8	49128-4509GT	HOSE ASSY,3/8" 90 FEM,STR FEM	1
9	49117-4891GT	HOSE ASSY,1/4,90 FEM,STR FEM	1
10	49418GT	FITTING,ELBOW,45D,520320-4-6**	1

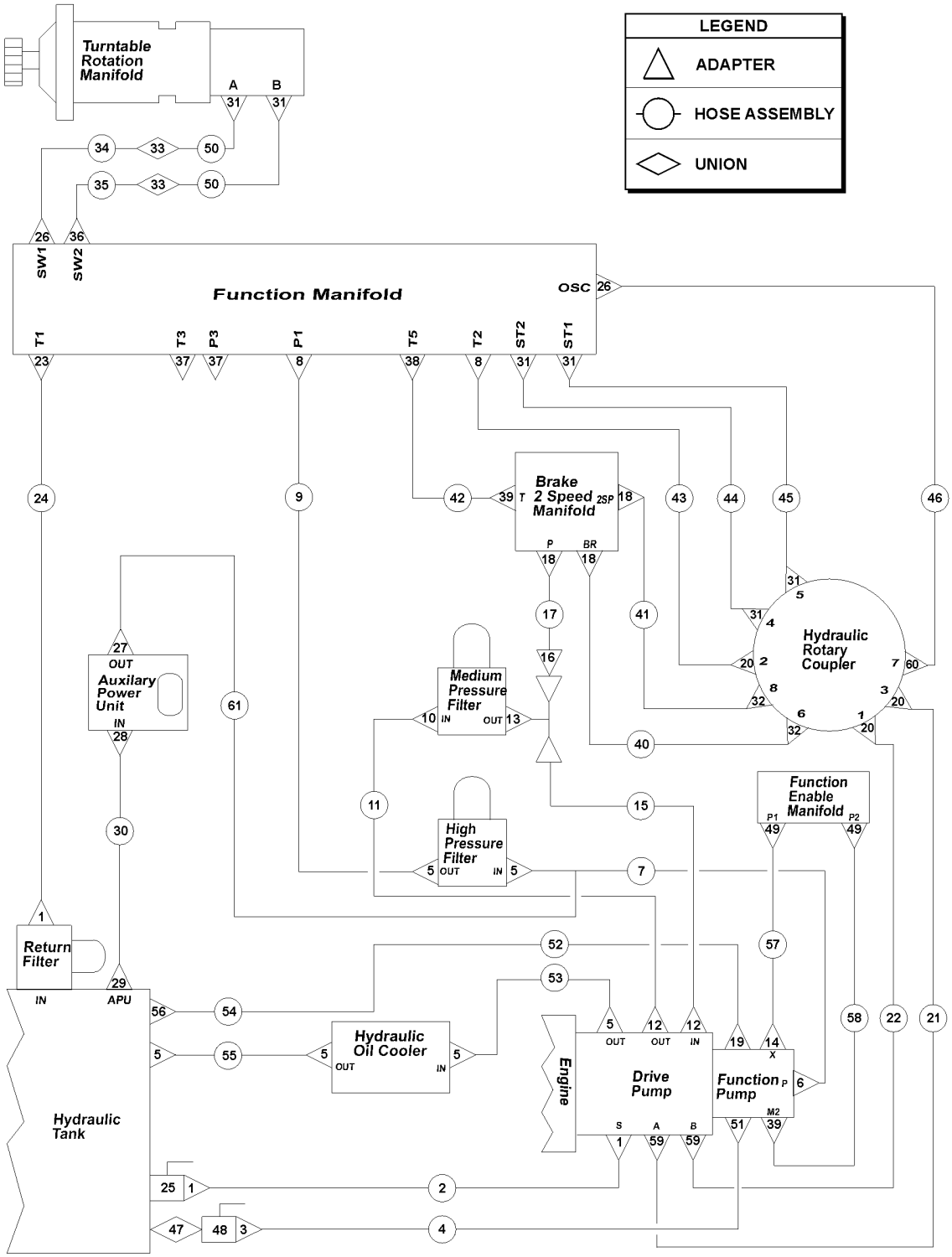
LEGEND
ADAPTER
HOSE ASSEMBLY
UNION
Turntable Rotation Manifold
A
B
31
31
34
33
50
35
33
50
26
36
SW1
SW2
Function Manifold
OSC
26
T1
T3
P3
P1
T5
T2
ST2
ST1
23
37
37
8
38
8
31
31
24
9
42
39
T
Brake 2 Speed Manifold
2SP
18
43
44
45
46
P
BR
18
18
17
41
16
40
31
5
31
4
Hydraulic Rotary Coupler
20
2
8
32
6
32
7
60
3
20
1
20
27
OUT
Auxilary Power Unit
IN
28
61
Medium Pressure Filter
10
IN
OUT
13
11
15
30
High Pressure Filter
5
OUT
IN
5
7
Function Enable Manifold
P1
P2
49
49
1
Return Filter
IN
29
APU
52
53
57
56
54
5
55
5
Hydraulic Oil Cooler
OUT
IN
5
58
22
21
5
OUT
12
OUT
12
IN
19
14
X
Engine
Drive Pump
Function Pump
P
6
M2
S
1
A
59
B
59
51
39
Hydraulic Tank
25
1
2
47
48
3
4

Item	Part No.	Description	Qty.
1	48984GT	CONN, 520120-16	3
2	88942-9554GT	HOSE ASSY,1",90 FEM,STR FEM	1
3	61083GT	CONN,520120-24	1
4	121608-9175GT	HOSE ASSY,1-1/2,STR,90D JIC	1
5	48959GT	FITTING,ELBOW,90D,520220-12	4
6	48977GT	CONN,520120-12-16	1
7	94374-4755GT	ASSY,HOSE,HYD,-8,3000,STR,45	1
8	48960GT	FITTING,CONN,520120-12***	2
8-	48963GT	FITTING,ELBOW,45D,520320-12*** (Welder option)	
8-	48964GT	TEE,RUN,SWIVEL,520432-12 (Welder option)	
9	89871-5348GT	HOSE ASSY,3/4,STR FEM,STR FEM	1
10	48933GT	CONN,520120-8***	1
11	49143-4754GT	ASSY,HOSE,HYD,-6,3000,STR,STR	1
12	48976GT	ELBOW,90D,520220-12-16	2
13	48935GT	TEE,RUN, 520428-8	1
14	48912GT	CONN,520120-4-6***	1
15	49143-3354GT	ASSY,HOSE,HYD,-6,3000,STR,STR	1
16	139231GT	REDUCER,520123-8-6 FROM SN S85XCH-2840	1
17	101929-1809GT	ASSY,HOSE,HYD,-8,3000,STR,90	1
18	48927GT	CONN,520120-6-4	3
19	48946GT	CONN,520120-8-10	1
20	48963GT	FITTING,ELBOW,45D,520320-12***	3
21	89871-5848GT	HOSE ASSY,3/4,STR FEM	1
22	89871-5648GT	HOSE ASSY,3/4,STR FEM	1
23	48983GT	ELBOW,90D,520220-16	1
24	88942-6754GT	HOSE ASSY,1,90 FEM,STR FEM	1
25	48996GT	VALVE,BALL,16 MSAE-16 FSAE***	1
26	48915GT	ELBOW,90D,520220-6	2

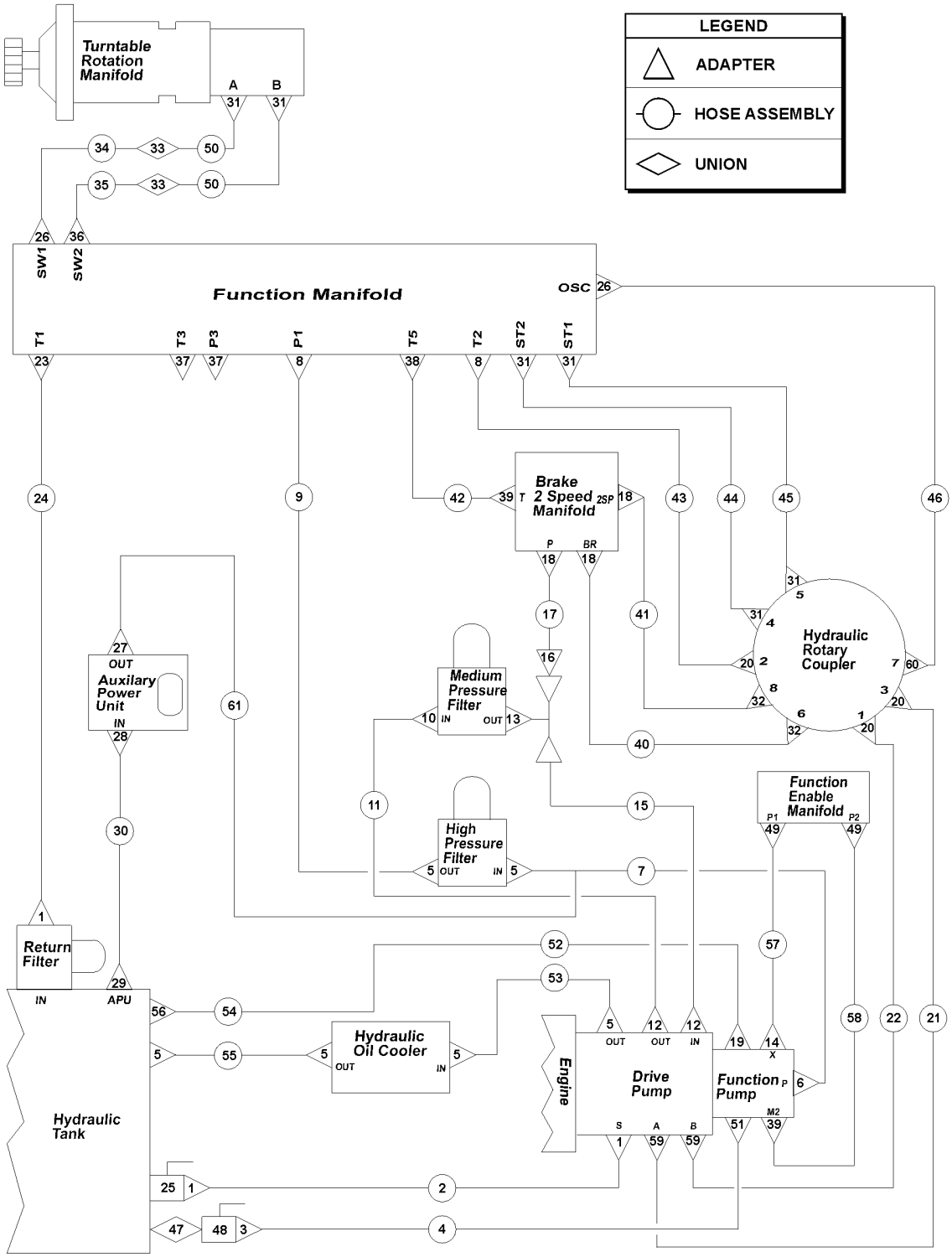
LEGEND
ADAPTER
HOSE ASSEMBLY
UNION
Turntable Rotation Manifold
A
B
Function Manifold
SW1
SW2
OSC
T1
T3
P3
P1
T5
T2
ST2
ST1
Brake 2 Speed Manifold
2SP
T
P
BR
Hydraulic Rotary Coupler
Auxilary Power Unit
OUT
IN
Medium Pressure Filter
High Pressure Filter
Function Enable Manifold
P1
P2
Return Filter
APU
Hydraulic Oil Cooler
Hydraulic Tank
Engine
Drive Pump
Function Pump
M2
S
A
B
X
P

Item	Part No.	Description	Qty.
27	48918GT	TEE,RUN,520428-6	1
28	48932GT	FITTING,ELBOW,90D,520220-8***	1
29	48933GT	CONN,520120-8***	1
30	49183-2692GT	HOSE ASSY,1/2,STR FEM,STR FEM*	1
31	48916GT	CONN, 520120-6	7
32	48928GT	ELBOW,45D,520320-6-4	2
33	61321GT	ELBOW,90D,BLKHD,ORFS-6-6 W/NUT	2
34	121685GT	HYD TUBE,SWING DRIVE #1	1
35	121684GT	HYD TUBE,SWING DRIVE #2	1
36	56003GT	ELBOW,90D,LONG,521520-6	1
37	87172GT	PLUG,HEX SOCKET,090109B-12	2
38	48905GT	CONNECTOR, 520120-4	1
39	48904GT	ELBOW, 90D, 520220-4 (Deutz and Perkins models)	2
40	1282287GT	HYD TUBE,BRAKE	1
41	1282286GT	HYD TUBE,2-SPEED	1
42	49117-6191GT	HOSE ASSY,1/4,90 FEM,STR FEM	1
43	49149-3126GT	HOSE ASSY,3/4,45 FEM,STR FEM	1
44	121682GT	HYD TUBE,STEER TUBE #2	1
45	121683GT	HYD TUBE,STEER TUBE #1	1
46	121681GT	HYD TUBE,OSC TUBE	1
47	75254GT	UNION,STR.THREAD 24***	1
48	75256GT	VALVE BALL,24 FSAE-24 FSAE***	1
49	48907GT	ELBOW,45D,520320-4 (Deutz and Perkins models)	2
50	49128-2609GT	HOSE ASSEMBLY,3/8"	2
51	121777GT	CONN,070121-24-24	1
52	49143-2829GT	HOSE ASSY,1/2,90 FEM,STR FEMM*	1
53	49151-3548GT	HOSE ASSY,3/4,STR FEM,STR FEM	1
54	121366GT	HYD TUBE,FUNCTION CASE	1

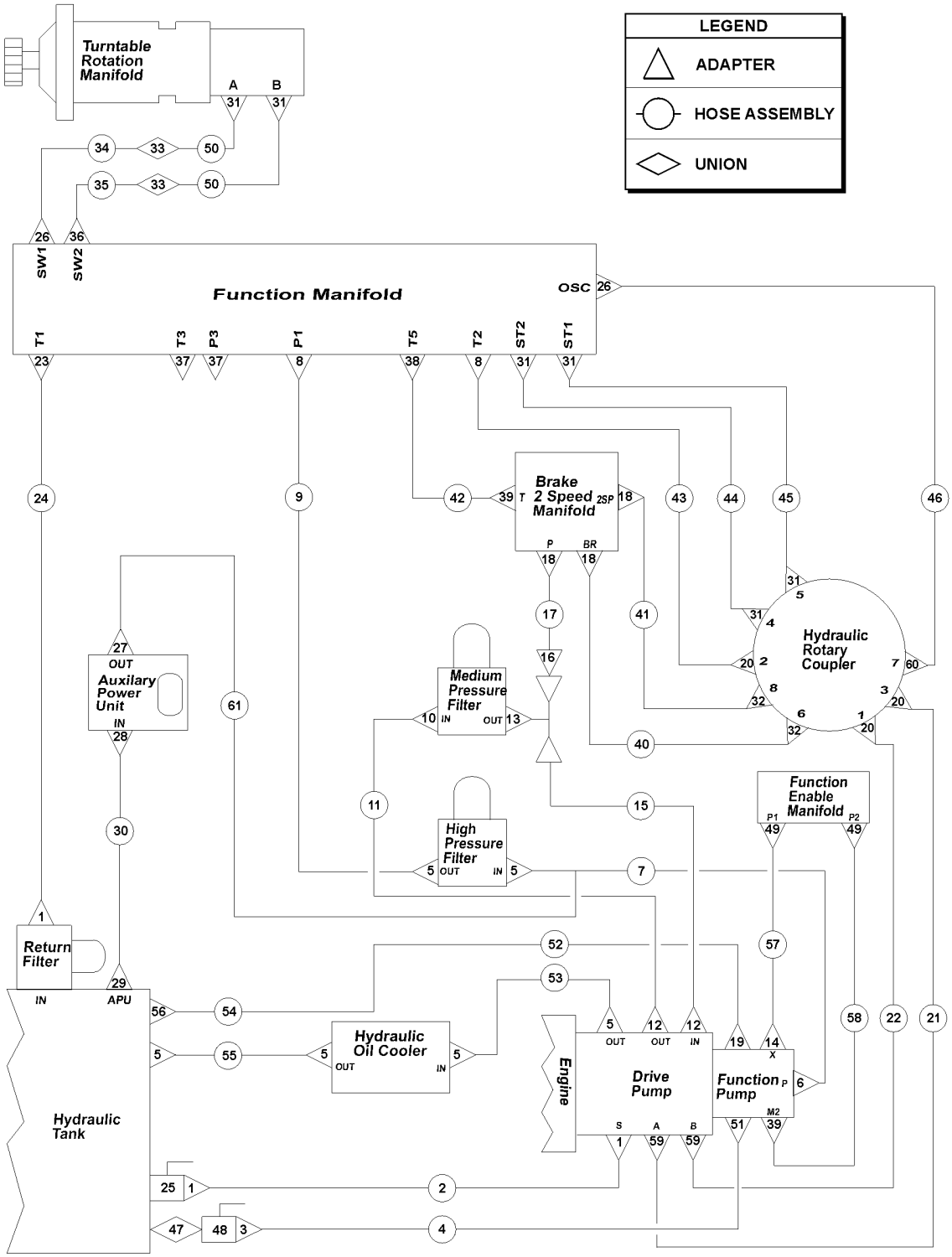
LEGEND
ADAPTER
HOSE ASSEMBLY
UNION
Turntable Rotation Manifold
A
B
31
31
34
33
50
35
33
50
26
36
SW1
SW2
Function Manifold
OSC
26
T1
T3
P3
P1
T5
T2
ST2
ST1
23
37
37
8
38
8
31
31
24
9
42
39
T
Brake 2 Speed Manifold
2SP
18
43
44
45
46
P
BR
18
18
17
41
16
40
31
5
31
4
Hydraulic Rotary Coupler
20
2
8
32
6
32
7
60
3
20
1
20
27
OUT
Auxilary Power Unit
IN
28
61
Medium Pressure Filter
10
IN
OUT
13
11
15
30
High Pressure Filter
5
OUT
IN
5
7
Function Enable Manifold
P1
P2
49
49
1
Return Filter
IN
29
APU
52
53
57
56
54
5
55
5
Hydraulic Oil Cooler
OUT
IN
5
58
22
21
5
OUT
12
OUT
12
IN
19
14
X
Engine
Drive Pump
Function Pump
P
6
M2
S
1
A
59
B
59
51
39
Hydraulic Tank
25
1
2
47
48
3
4

Item	Part No.	Description	Qty.
55	49151-1898GT	HOSE ASSY,3/4,STR FEM,STR FEM	1
56	75614GT	ELBOW,90D,LONG,521520-8	1
57	49116-1437GT	HOSE ASSY,1/4,45 FEM,STR FEM	1
58	49119-1378GT	HOSE ASSY,1/4,STR FEM,STR FEM	1
59	48946GT	CONN,520120-8-10	2
60	48920GT	ELBOW,45D,520320-6	1
61	49128-7600GT	HOSE ASSY,3/8,90 FEM,STR FEM	1

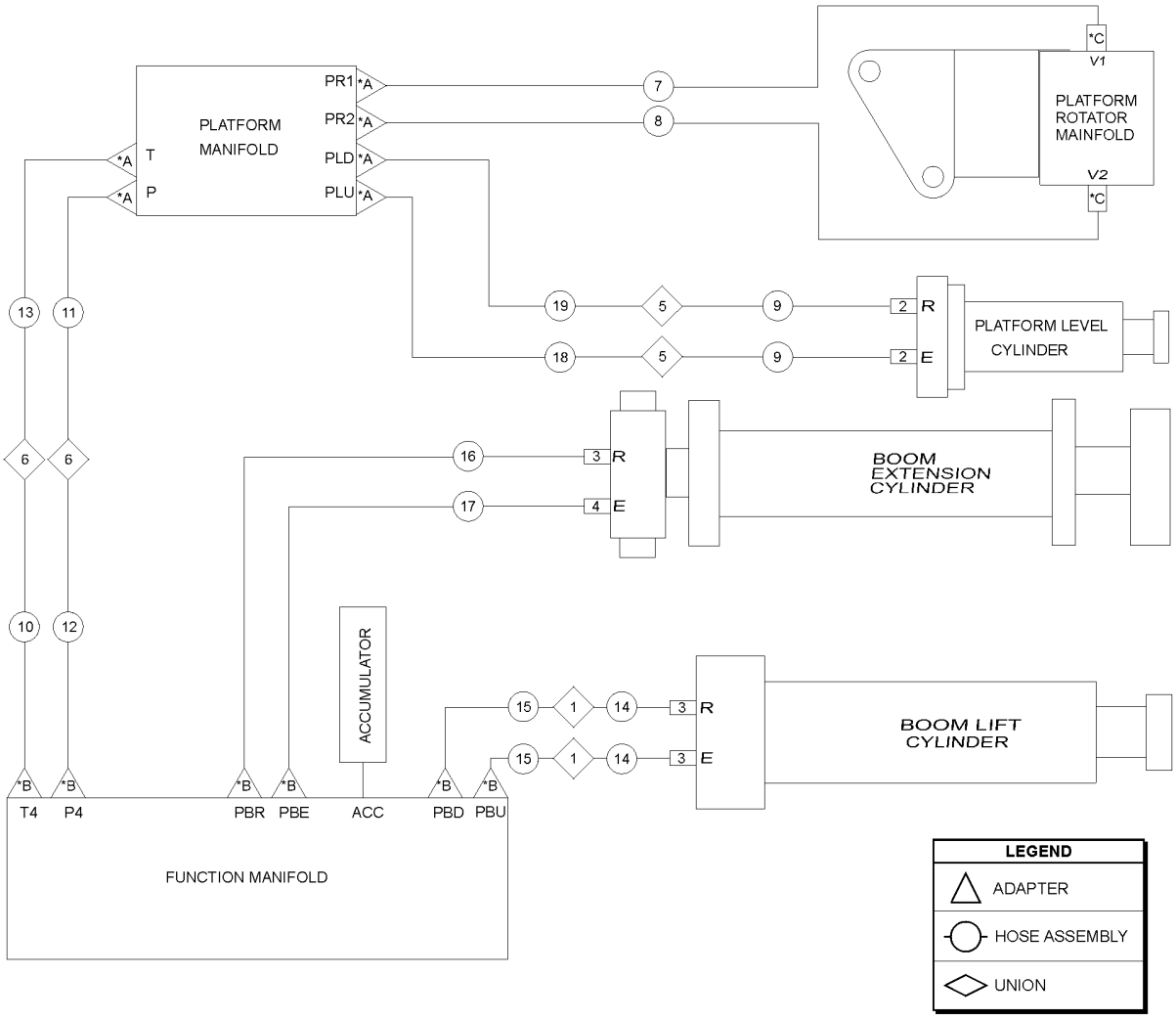
PLATFORM MANIFOLD
PR1
PR2
PLD
PLU
T
P
*A
*C
V1
V2
PLATFORM ROTATOR MAINFOLD
PLATFORM LEVEL CYLINDER
BOOM EXTENSION CYLINDER
BOOM LIFT CYLINDER
ACCUMULATOR
FUNCTION MANIFOLD
T4
P4
PBR
PBE
ACC
PBD
PBU
*B
R
E
LEGEND
ADAPTER
HOSE ASSEMBLY
UNION

712.1 Boom, S-80 XC

Item	Part No.	Description	Qty.
1	48894GT	CONN,BULKHEAD,520601-8	2
2	48905GT	CONNECTOR, 520120-4	2
3	48933GT	CONN,520120-8***	3
4	48960GT	FITTING,CONN,520120-12***	1
5	61268GT	CONN,BULKHEAD,520801,-4	2
6	61321GT	ELBOW,90D,BLKHD,ORFS-6-6 W/NUT	2
7	49116-2437GT	HOSE ASSY,1/4,45 FEM,STR FEM	1
8	49116-2637GT	HOSE ASSY,1/4,45 FEM,STR FEM	1
9	49119-2478GT	HOSE ASSY,1/4,STR FEM,STR FEM*	2
10	49128-50409GT	HOSE ASSY,3/8,90 FEM,STR FEM	1
11	49128-66409GT	ASSY,HOSE,HYD,-6,3000,STR,STR	1
12	49130-51182GT	ASSY,HOSE,HYD,-4,3250,STR,90	1
13	49130-63782GT	HOSE ASSY,3/8",STR FEM/STR FEM	1
14	49137-5041GT	HOSE ASSY,1/2,90L FEM,STR FEM	2
15	49137-14429GT	ASSY,HOSE,HYD,-6,3000,STR,90	2
16	49141-17463GT	HOSE ASSY,1/2,45 FEM,STR FEM	1
17	102313-17526GT	HOSE ASSY,3/4,45 FEM,STR FEM	1
18	49119-5278GT	ASSY, HOSE, HYD, -4, 3250, STR, STR	1
19	49119-5378GT	HOSE ASSY,1/4,STR FEM,STR FEM*	1

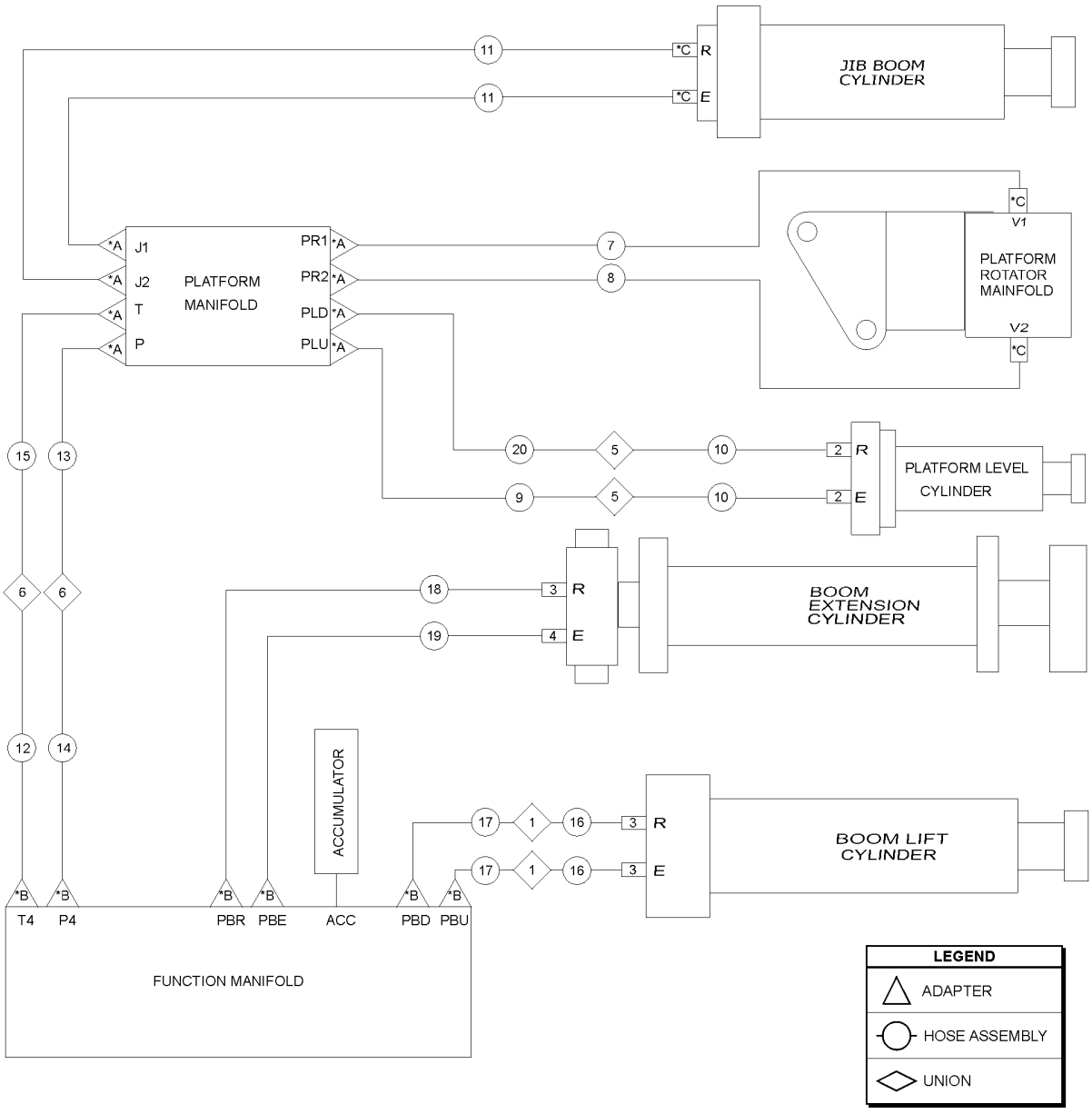
JIB BOOM CYLINDER
PLATFORM MANIFOLD
PLATFORM ROTATOR MAINFOLD
PLATFORM LEVEL CYLINDER
BOOM EXTENSION CYLINDER
BOOM LIFT CYLINDER
ACCUMULATOR
FUNCTION MANIFOLD
J1
J2
T
P
PR1
PR2
PLD
PLU
V1
V2
R
E
T4
P4
PBR
PBE
ACC
PBD
PBU
LEGEND
ADAPTER
HOSE ASSEMBLY
UNION

713.1 Boom, S-85 XC

Item	Part No.	Description	Qty.
1	48894GT	CONN,BULKHEAD,520601-8	2
2	48905GT	CONNECTOR, 520120-4	2
3	48933GT	CONN,520120-8***	3
4	48960GT	FITTING,CONN,520120-12***	1
5	61079GT	ELBOW,90D,BULKHEAD,520701-4	2
6	61321GT	ELBOW,90D,BLKHD,ORFS-6-6 W/NUT	2
7	49116-2437GT	HOSE ASSY,1/4,45 FEM,STR FEM	1
8	49116-2637GT	HOSE ASSY,1/4,45 FEM,STR FEM	1
9	49117-12291GT	ASSY,HOSE,HYD,-6,5000,STR,STR	1
10	49119-2478GT	HOSE ASSY,1/4,STR FEM,STR FEM*	2
11	49119-4978GT	ASSY, HOSE, HYD, 3250, -4, STR, STR	2
12	49128-50409GT	HOSE ASSY,3/8,90 FEM,STR FEM	1
13	49128-73609GT	ASSY,HOSE,HYD,-6,3000,STR,STR	1
14	49130-51182GT	ASSY,HOSE,HYD,-4,3250,STR,90	1
15	49130-70782GT	ASSY,HOSE,HYD,-4,3250,STR,STR	1
16	49137-5041GT	HOSE ASSY,1/2,90L FEM,STR FEM	2
17	49137-14429GT	ASSY,HOSE,HYD,-6,3000,STR,90	2
18	49141-17463GT	HOSE ASSY,1/2,45 FEM,STR FEM	1
19	102313-17526GT	HOSE ASSY,3/4,45 FEM,STR FEM	1
20	121787-12291GT	ASSY,HOSE,HYD,-8,3000,STR,90	1

801.1 Alarm, Beacon Package and Driving Lights

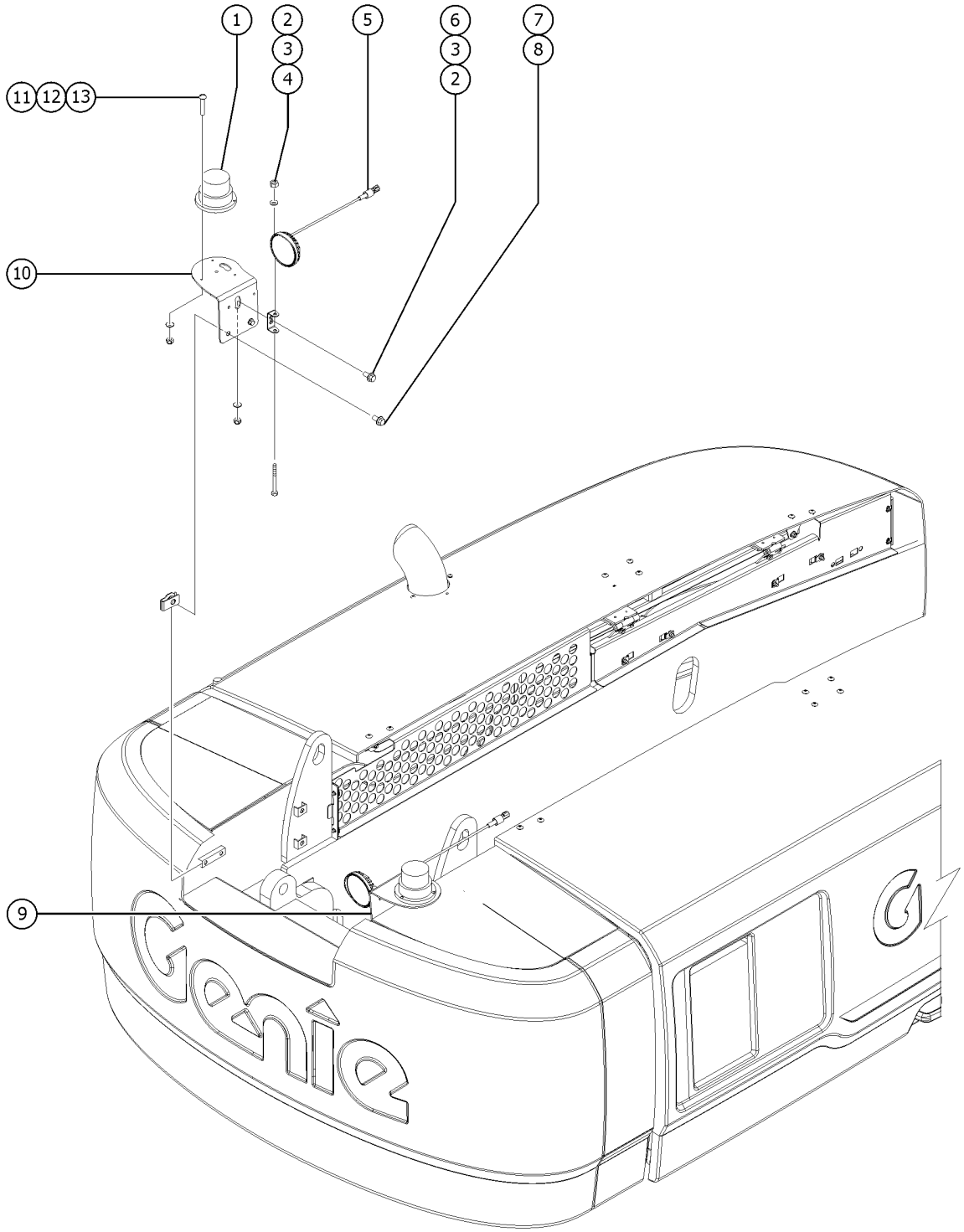

Item	Part No.	Description	Qty.
1	56704GT	STROBE,FIREBOLT,12-80VDC,AMB**	2
1-	121489GT	HARNESS,BEACON,S80/85 2008	
1-	122019GT	FLASHTUBE,U SHAPED,360DEG,BULB	
1-	226393GT	FLASHTUBE,STRAIGHT,360DEG,BULB	
1-	72282GT	LENS,AMBER,STROBE,FIREBOLT	
2	22571GT	NUT,HEX,M8 X 1.25	2
3	49408GT	WASHER, LOCK, M8	4
4	75185GT	SCREW,HHC,M8X1.25X 70MM,GR8.8	2
5	823520GT	ASSY, DRIVE LIGHT, 12V LED items 2, 3, 4 and light bracket included.	2
6	49379GT	SCREW,HHC,M8 X 1.25 X 25	
7	824089GT	SCREW, HHF, 3/8-16 X .75, 8, ZAG	
8	29868GT	SPRING CLIP,3/8-16,.05-.20X.73,ZAG	4
9	1253795GT	FORMING, LIGHT/BEACON BRKT, RH left side	1
10	1253796GT	FORMING, LIGHT/BEACON BRKT, LH right side	1
11	825352GT	SCREW,PHPM,10-32X1.25,ZAG	6
12	1253185GT	WASHER,FLAT,#10,USS,ZAG	6
13	1283005GT	NUT,NYLOCK FLG,10-32,A,ZAG	6

802.1 Platform Options

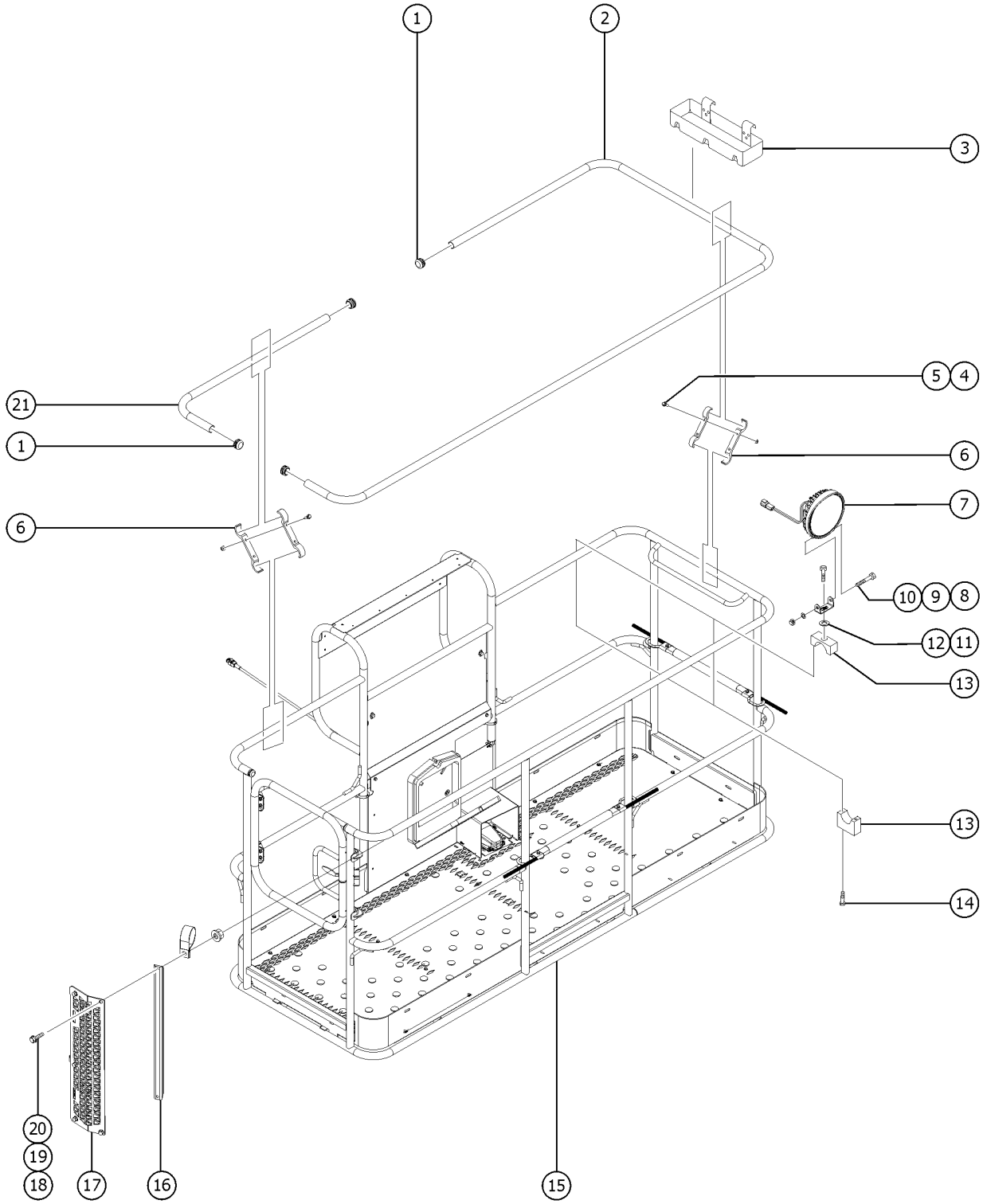

Item	Part No.	Description	Qty.
A	1291495GT	KIT, AUX RAIL, 6' PLAT, SIDE GATE (6 foot Platform)	
B	1291496GT	KIT, AUX RAIL, 8' PLAT, SIDE GATE (8 foot Platform)	
1	55753GT	BUMPER, PLASTIC, 1.25 O.D.	4
2	1271077GT	AUX RAIL, 8' PLAT, TRI-ENTRY (8 foot platform)	1
2B	1270570GT	AUX RAIL, 6' PLAT, SIDE ENTRY (6 foot platform)	1
3	9599-SGT	TOOL TRAY ACCESSORY***	1
4	824079GT	SCREW,HHF,1/4-20X1,8,ZAG (8 foot platform)	26
4B	824079GT	SCREW,HHF,1/4-20X1,8,ZAG (6 foot platform)	22
5	824027GT	NUT, TL FLG, 1/4-20, G, ZAG (8 foot platform)	26
5B	824027GT	NUT, TL FLG, 1/4-20, G, ZAG (6 foot platform)	22
6	122073GT	SUPPORT, RAILING (8 foot platform)	26
6B	122073GT	SUPPORT, RAILING (6 foot platform)	22
7	1282993GT	LIGHT, LED WHITE 12V W/SWITCH (from SN 120) items 8, 9, 10 included	2
8	75185GT	SCREW,HHC,M8X1.25X 70MM,GR8.8	2
9	49408GT	WASHER, LOCK, M8	2
10	22571GT	NUT,HEX,M8 X 1.25	2
11	825358GT	WASHER,FLAT,5/16,USS,ZAG	2
12	1256464GT	SCREW,HHC,5/16-18X.75,8,ZAG	
13	35956GT	WORK LIGHT MOUNTING BRACKET	2
14	824081GT	SCREW, HHF, 1/4-20 X 1.5, 8, ZAG	4
15		REF. WELDMENT, PLATFORM (refer to 601.1)	1
16	1277966GT	TUBE,SQUARE, 1" X 1" X .125	
17	1277952GT	GUARD, SWING GATE	1
18	824086GT	SCREW, HHF, 5/16-18 X 1, 8, ZAG	5
19	56424GT	CLAMP,1.25X.5 RUBBER-CUSHION	5
20	824028GT	NUT,TL FLG,5/16-18,G,ZAG	5
21	1271078GT	AUX RAIL, 8' PLAT, TRI-ENTRY shown	1
21B	1270571GT	AUX RAIL, 6' PLAT, SIDE ENTRY not shown	1

803.1 Hostile Environment Package - Ground and Platform Control Box Covers

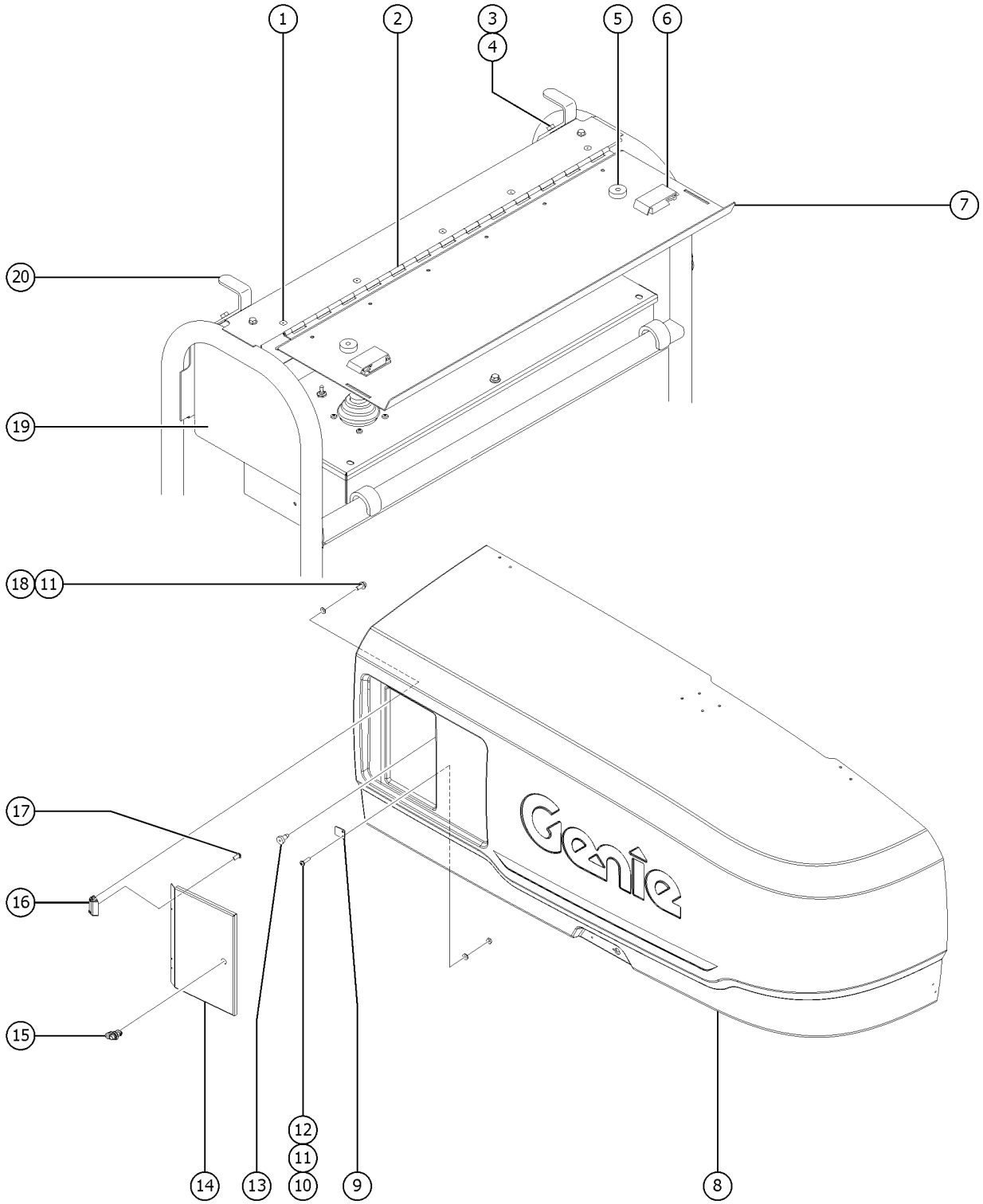

Item	*Part No.*	*Description*	*Qty.*
1	54486GT	RIVET,ALUM,ALUM,3/16BUTTONHEAD	11
2	111526GT	HINGE,PLAT CONTROL BOX COVER	1
3	824078GT	SCREW,HHF,1/4-20X.75,8,ZAG	8
4	824027GT	NUT, TL FLG, 1/4-20, G, ZAG	8
5	43392GT	BUMPER,BATTERY BOX & RAILS	2
6	30468GT	LATCH,SLIDE, FLUSH MOUNT STYLE	2
7	102785PGT	CONTROL BOX COVER,LID,PTD	1
8		REF. COVER, SWING CHASSIS, TS (refer to 304.1)	1
9	1261001GT	STRIKER, LATCH	1
10	824215GT	SCREW, PHPM, 10-32 X .75, ZAG	2
11	1253185GT	WASHER,FLAT,#10,USS,ZAG	6
12	1256804GT	NUT,10-32,ZAG	2
13	34619GT	BUMPER,RUBBER***	2
14	1284272GT	FORMING,CONTROL BOX COVER,ALC600	1
15	1259583GT	LATCH, PUSH BUTTON	1
16	1259584GT	HINGE, CONSTANT TORQUE	2
17	1257227GT	SCREW,PHPM,10-32X.625,ZAG	4
18	218457GT	SCREW,HHF,M5X12,DIN6921,10.9,Z	4
19	88607PGT	COVER,CONTROL BOX LEFT SIDE***	1
19-	88606PGT	COVER,CONTROL BOX RIGHT SIDE**	1
20	102786PGT	FORMING,LATCH,CTRL BOX LID PTD	2

804.1 Hostile Environment Package - Booms

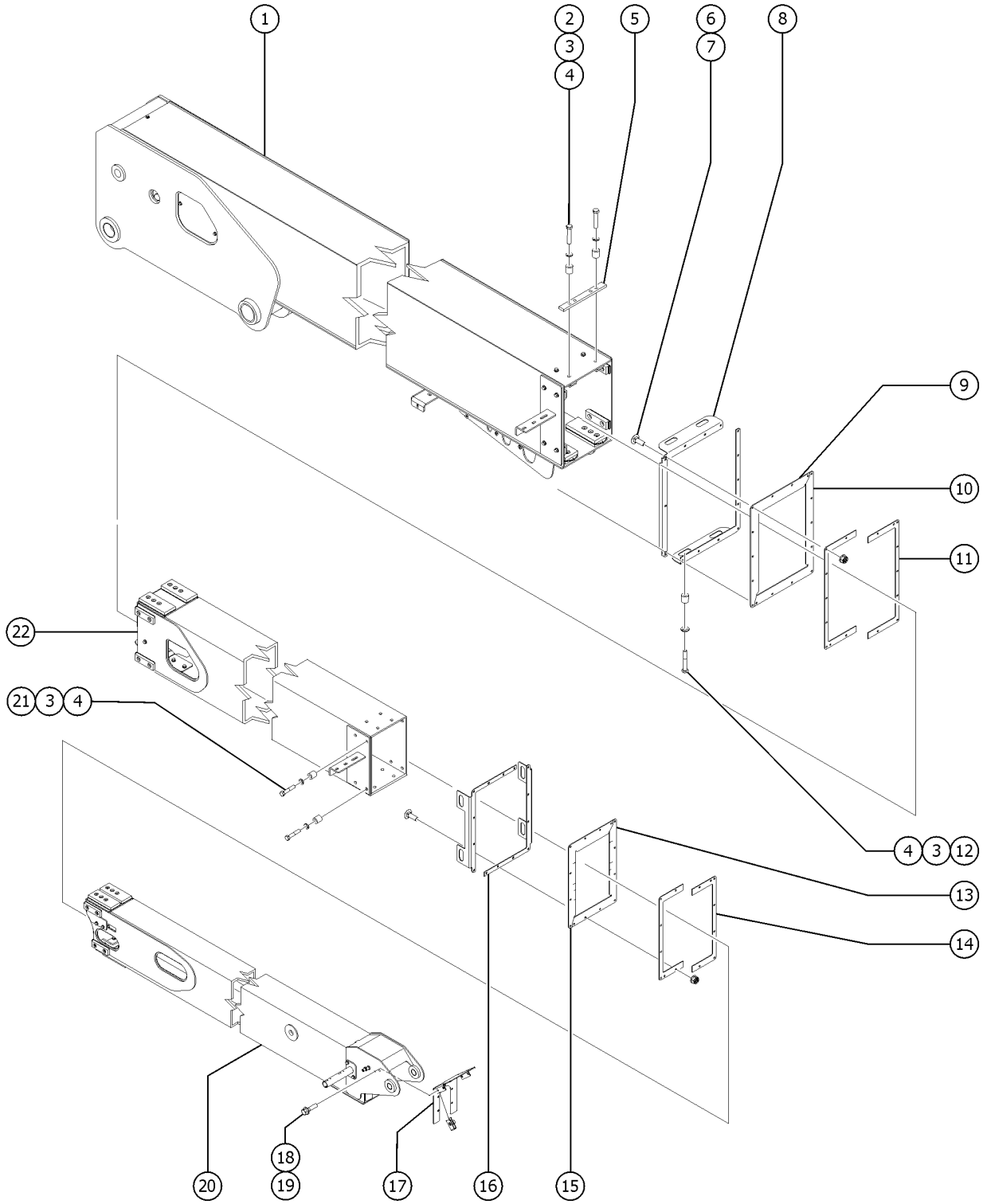

Item	Part No.	Description	Qty.
1		REF. BOOM TUBE 1 (refer to 502.1)	
2	1252978GT	SCREW,HHC,3/8-16X2.25,8,ZAG	2
3	824110GT	WASHER, LOCK, 3/8, ZAG	8
4	101932GT	TUBE, RD., STL., DOM .75 X .437 X .78	8
5	121173GT	SPACER,BOOM WIPER TOP	2
6	824124GT	BOLT, CARRIAGE, 1/4-20 X .75, 5, ZAG	30
7	1277924GT	NUT,NYLOCK FLG,1/4-20,F,ZAG	30
8	1280076GT	FORMING, BRKT, WIPER 1 TO 2, S-80/85 XC	2
9	1280072GT	WIPER, RUBBER S-80/85 XC SEC #1, TOP	1
10	1280073GT	WIPER, RUBBER S-80/85 XC SEC #1, BOT	1
11	121167GT	PLATE,WIPER BACKING,BOOM #1	2
12	824069GT	SCREW, HHC, 3/8-16 X 2.5, 8, ZAG	2
13	1280075GT	WIPER, RUBBER S-80/85 XC SEC #2, BOT	1
14	121170GT	PLATE,BACKING WIPER 2 TO 3	2
15	1280074GT	WIPER, RUBBER S-80/85 XC SEC #2, TOP	1
16	1280077GT	FORMING, BRKT, WIPER 2 TO 3, S-80/85 XC	2
17	1274869GT	FORMING, DEBRIS COVER, SEC #3 from SN S85XCH-3755	1
18	824078GT	SCREW,HHF,1/4-20X.75,8,ZAG from SN S85XCH-3755	4
19	56912GT	SPRING CLIP,1/4-20,.025-.15X.54,ZAG from SN S85XCH-3755	4
20		REF. BOOM TUBE 3 (refer to 505.1)	
21	1256108GT	SCREW,HHC,3/8-16X2,8,ZAG	4
22		REF.. BOOM TUBE 2 (refer to 504.1)	

805.1 Hostile Environment Package - Turntable

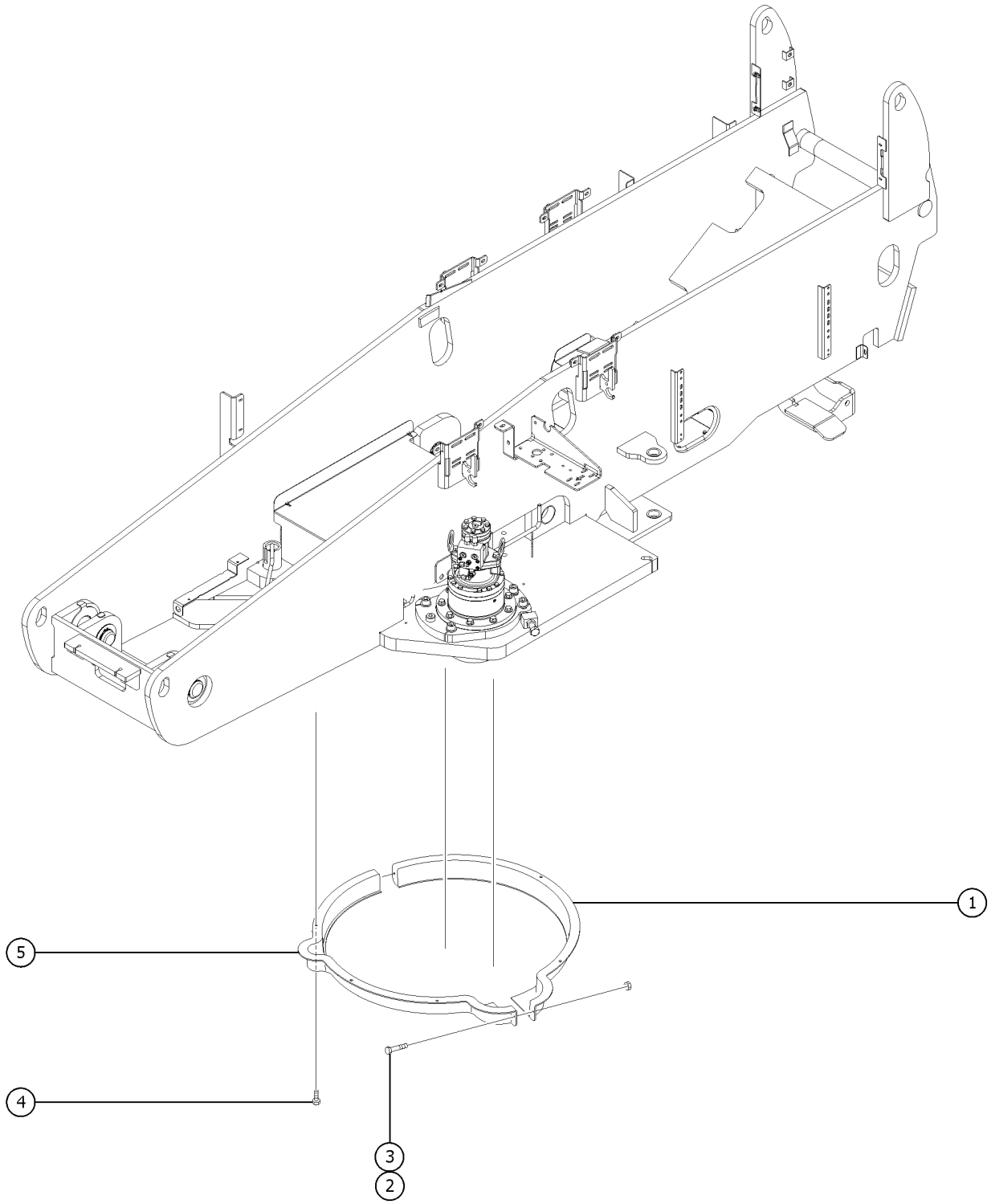

Item	*Part No.*	*Description*	*Qty.*
1	121316GT	COVER,RING GEAR,FRONT	1
2	824078GT	SCREW,HHF,1/4-20X.75,8,ZAG	2
3	1277924GT	NUT,NYLOCK FLG,1/4-20,F,ZAG	2
4	824090GT	SCREW,HHF,3/8-16X1,8,ZAG	6
5	121317GT	COVER,RING GEAR,REAR	1

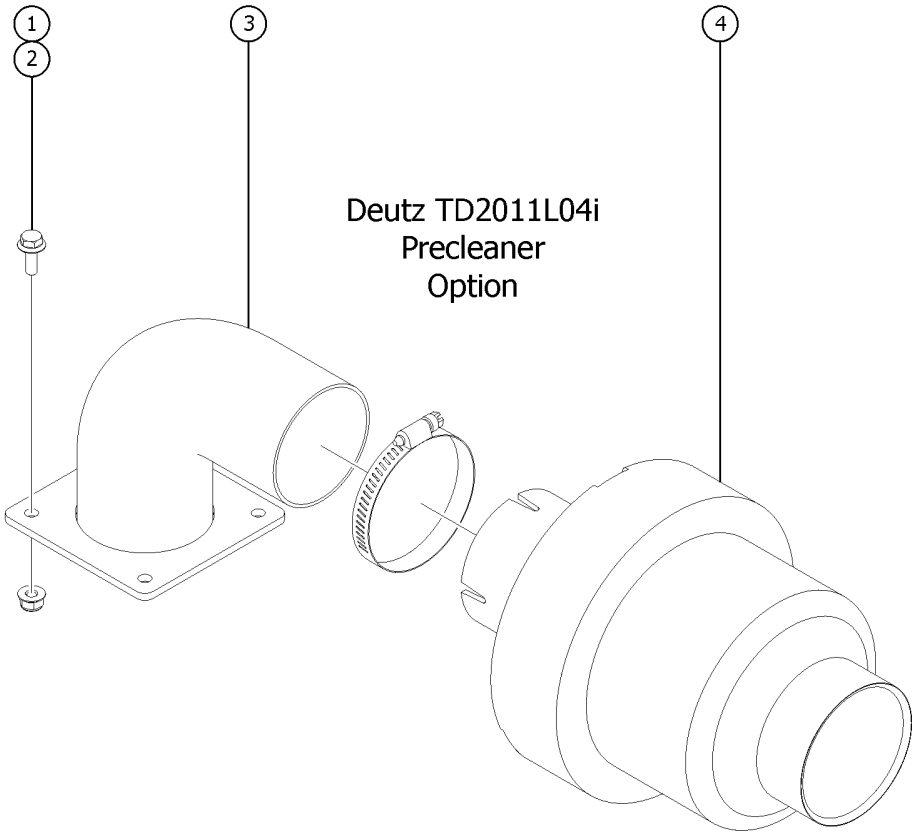
1
2
3
4
Deutz TD2011L04i
Precleaner
Option

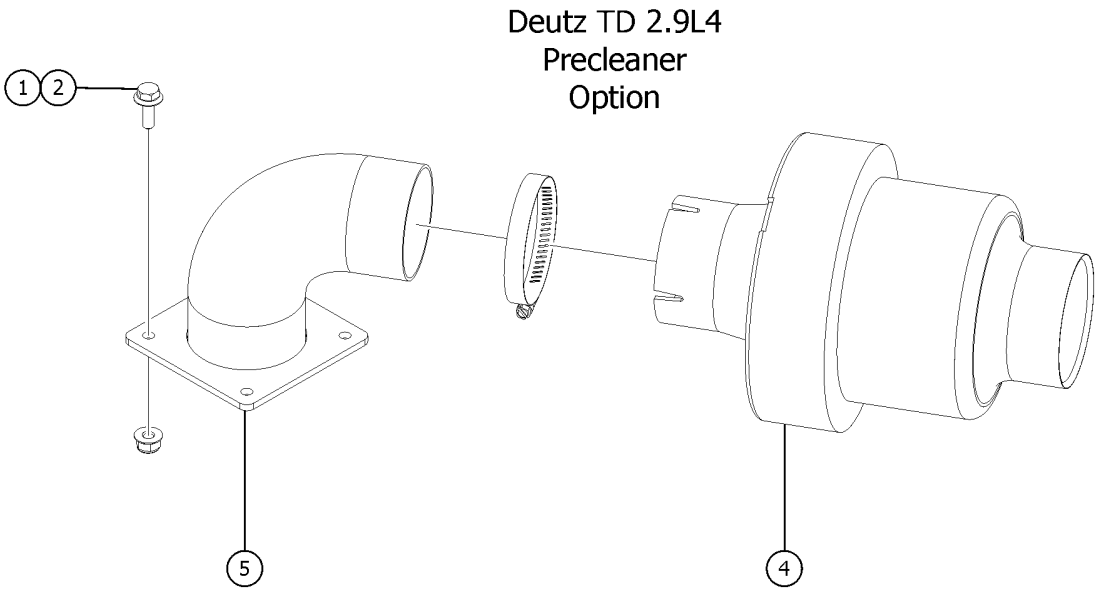
Deutz TD 2.9L4
Precleaner
Option
1
2
5
4

Item	*Part No.*	*Description*	*Qty.*
1	824078GT	SCREW,HHF,1/4-20X.75,8,ZAG	4
2	1277924GT	NUT,NYLOCK FLG,1/4-20,F,ZAG	4
3	121413GT	WELDMENT,PRECLEANER MT,DEUTZ	1
4	89959GT	PRECLEANER,INLINE 3" (Includes clamp)	1
5	825948GT	WELDMENT, PRECLEANER MT, DEUTZ/PERKINS	1

807.1 Hostile Environment Package - Cylinder Bellows, S-80 XC

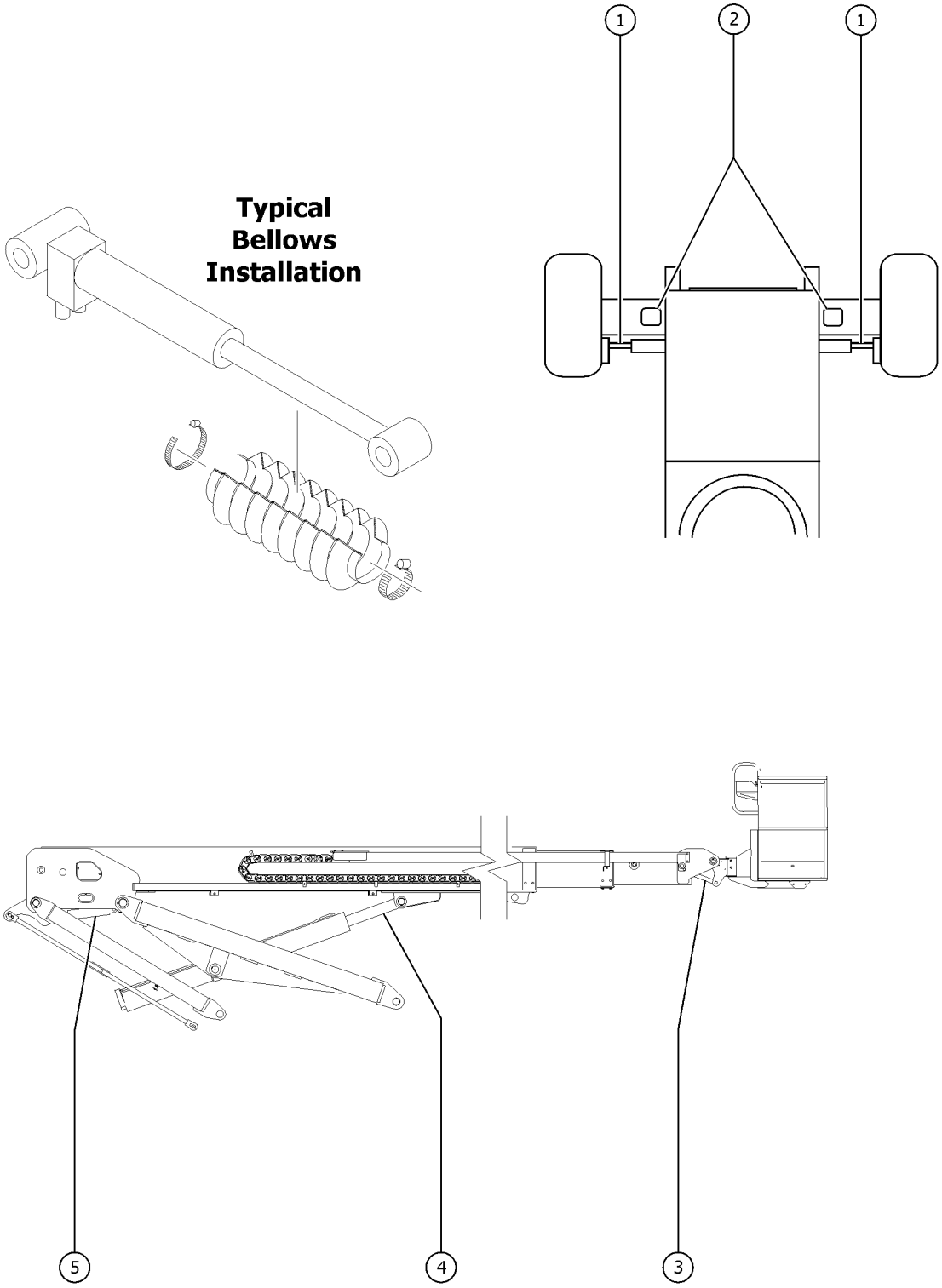

807.1 Hostile Environment Package - Cylinder Bellows, S-80 XC

Item	Part No.	Description	Qty.
1	34533GT	COVER,PROTECTIVE,STEER CYL	2
1-	30971GT	CLAMP,HOSE,3.00"	
1-	35434GT	CLAMP,HOSE,2.00***	
2	81700GT	COVER,PROTECTIVE,OSC.CYLINDER	2
2-	45345GT	CLAMP,HOSE,2.50"***	
2-	35432GT	CLAMP,HOSE,6.50	
3	1279802GT	BELLOWS, PLATFORM LEVEL CYLINDER	1
3-	1280080GT	PLATE, BACKING BELLOWS, S-80/85 XC	1
3-	1271757GT	SCREW,PHPM,10-32X.50,ZAG	
3-	30971GT	CLAMP,HOSE,3.00"	
3-	23405GT	NUTSERT,10-32 STEEL CAD PLTD	
3-	1256312GT	WASHER,LOCK,#10,ZAG	
4	1279799GT	BELLOWS, LIFT CYLINDER	1
4-	31523GT	CLAMP,HOSE,8.50 DIA***	
4-	34955GT	CLAMP, HOSE, 5.00	
5	1279800GT	BELLOWS, MASTER CYLINDER to SN S80XCH-3235	1
5-	35434GT	CLAMP,HOSE,2.00***	
5-	34955GT	CLAMP, HOSE, 5.00	

808.1 Hostile Environment Package - Cylinder Bellows, S-85 XC

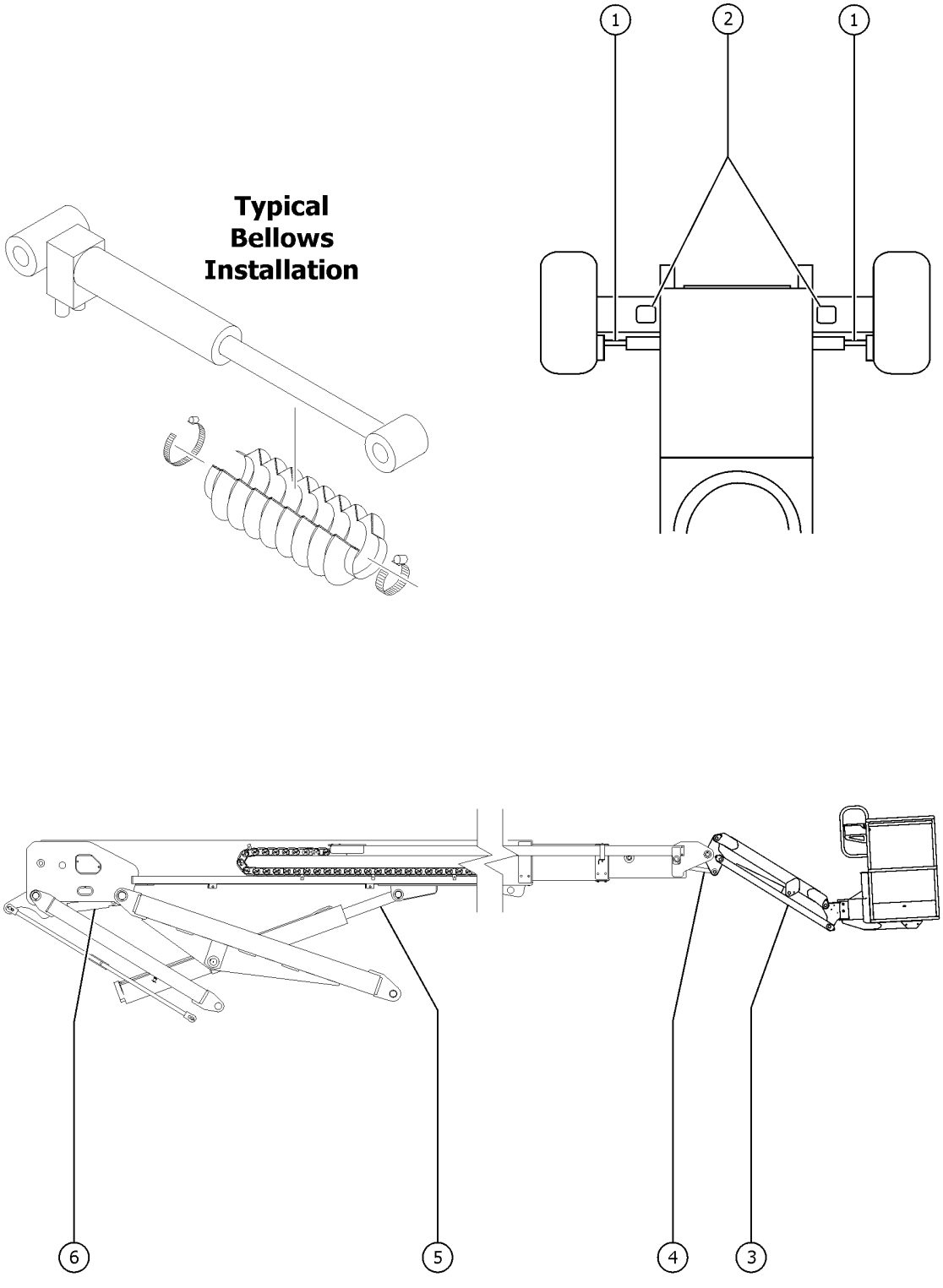

808.1 Hostile Environment Package - Cylinder Bellows, S-85 XC

Item	Part No.	Description	Qty.
1	34533GT	COVER,PROTECTIVE,STEER CYL	2
1-	30971GT	CLAMP,HOSE,3.00"	
1-	35434GT	CLAMP,HOSE,2.00***	
2	81700GT	COVER,PROTECTIVE,OSC.CYLINDER	2
2-	45345GT	CLAMP,HOSE,2.50"***	
2-	35432GT	CLAMP,HOSE,6.50	
3	1279801GT	BELLOWS, JIB CYLINDER S-85 XC	1
3-	34955GT	CLAMP, HOSE, 5.00	
3-	35434GT	CLAMP,HOSE,2.00***	
4	1279802GT	BELLOWS, PLATFORM LEVEL CYLINDER	1
4-	1280080GT	PLATE, BACKING BELLOWS, S-80/85 XC	1
4-	1271757GT	SCREW,PHPM,10-32X.50,ZAG	
4-	30971GT	CLAMP,HOSE,3.00"	
4-	23405GT	NUTSERT,10-32 STEEL CAD PLTD	
4-	1256312GT	WASHER,LOCK,#10,ZAG	
5	1279799GT	BELLOWS, LIFT CYLINDER	1
5-	31523GT	CLAMP,HOSE,8.50 DIA***	
5-	34955GT	CLAMP, HOSE, 5.00	
6	1279800GT	BELLOWS, MASTER CYLINDER to SN S-85XCH-3199	1
6-	35434GT	CLAMP,HOSE,2.00***	
6-	34955GT	CLAMP, HOSE, 5.00	

809.1 Panel Cradle Option

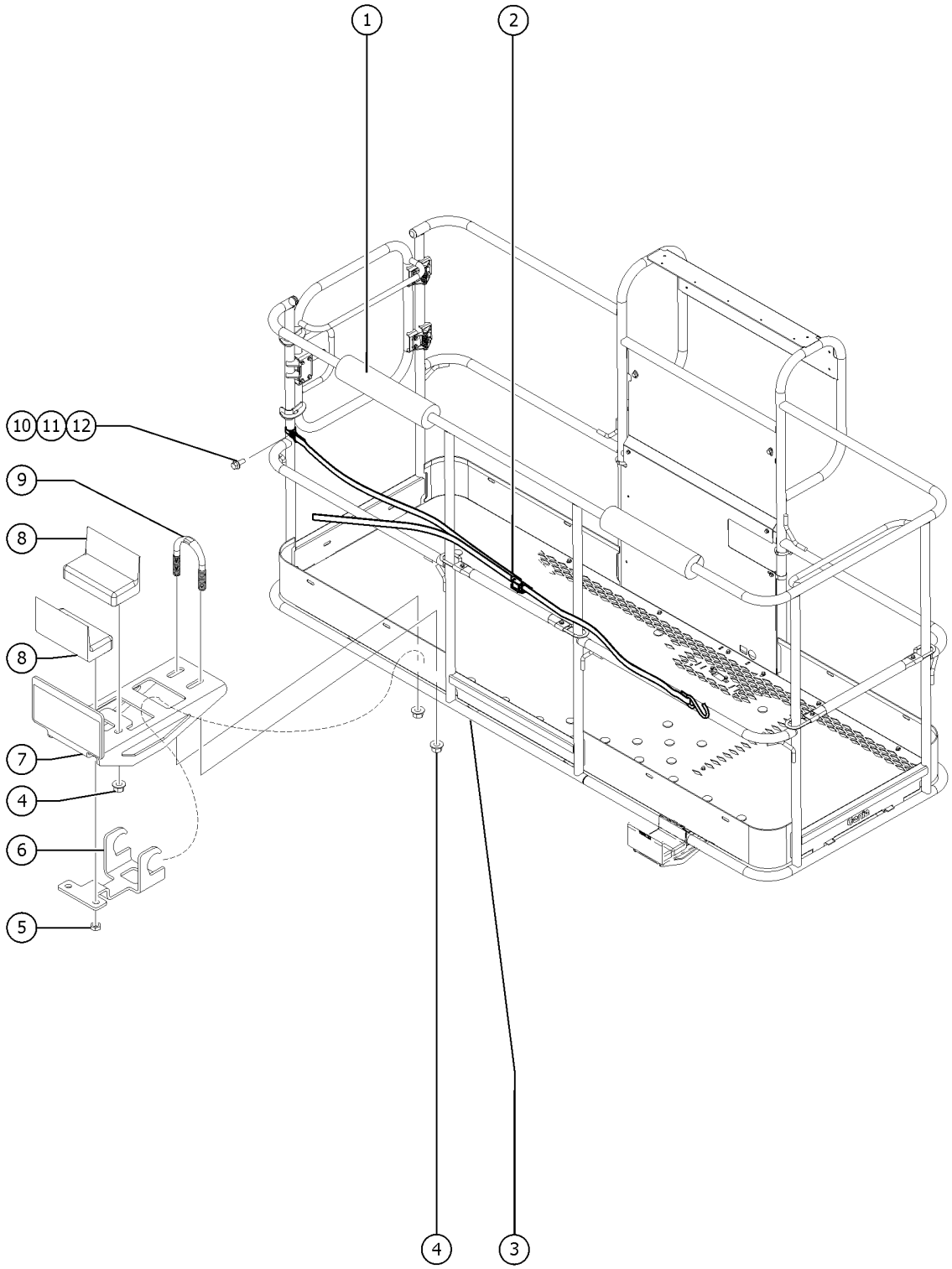

Item	Part No.	Description	Qty.
A-	77683GT	ACCESSORY,PANEL CRADLE,ANSI (ANSI/CSA models)	
B-	94493-SGT	KIT,PANEL CRADLE,CE (CE/AUS models)	
1	88377-1400GT	FOAM PAD***	2
2	77664GT	ADJUSTABLE STRAP ASSY	1
3	1274322GT	NUT,NYLOCK FLG,3/8-16,F,ZAG	8
4	5397GT	WASHER, FLAT, USS, 5/16-18 for machines before 2010	
5	228849GT	FORMING,SECONDARY SUPPORT 77576P is no longer available. For machines before 2010, must install Qty 2 service kit 233992 (ANSI) or 233993 (CE) for initial replacement.	2
6	228848GT	FORMING PANEL CRADLE 89724 is no longer available. For machines before 2010, must install Qty 2 service kit 233992 (ANSI) or 233993 (CE) for initial replacement.	2
6-	233992GT	KIT,PANEL CRADEL BRACKET,WORD (ANSI/CSA models) (includes hook, panel support bracket and installation instructions)	1
6-	233993GT	KIT,PANEL CRADLE BRACKET,SYMBL (CE/AUS models) (includes hook, panel support bracket and installation instructions)	1
7	56934GT	PAD,REST,1"THICK,FLANGED	4
7A	824038GT	NUT, TL JAM, 3/8-16, A, ZAG for 56934	4
8	1251600GT	U-BOLT, FLATTENED, 1.5DIA. X 3/8 UNC,ZAG	2
9	73463-1175GT	TUBE, RD, ALUM, 1.25 X .083 X 11.75	2
10	1256855	SCREW,HHF,1/4-20X.625,8,ZAG	1
11	6638GT	WASHER, FLAT, USS, 1/4"Y for machines before 2010	
12	1277924GT	NUT,NYLOCK FLG,1/4-20,F,ZAG	1
13	56424GT	CLAMP,1.25X.5 RUBBER-CUSHION	1

809.2 Panel Cradle Option

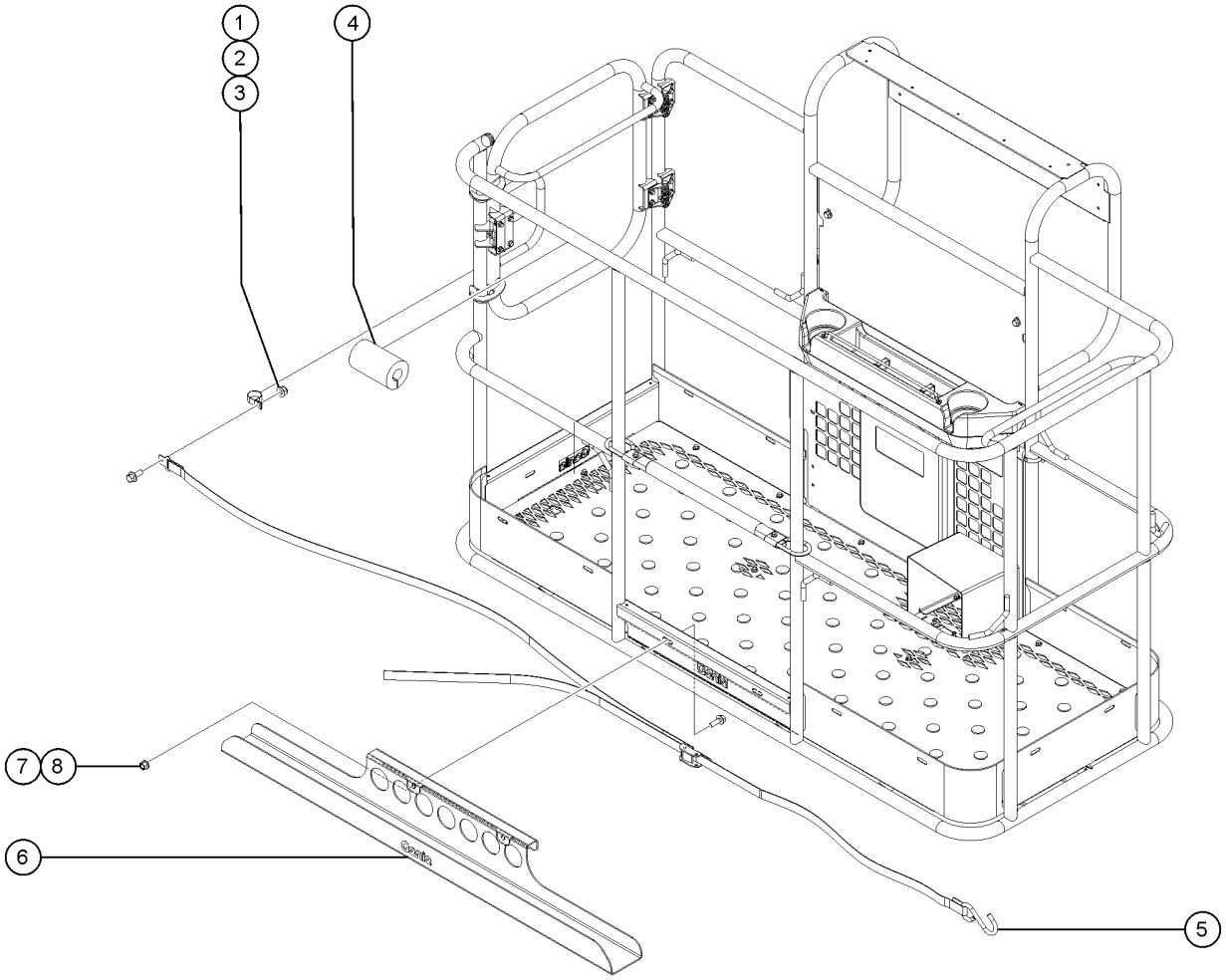

Item	Part No.	Description	Qty.
-	1298841GT	KIT, PANEL CRADLE, ANSI For machines with weld in toeboard only (ANSI)	1
1	1277924GT	NUT,NYLOCK FLG,1/4-20,F,ZAG	1
2	56424GT	CLAMP,1.25X.5 RUBBER-CUSHION	1
3	1256855GT	SCREW,HHF,1/4-20X.625,8,ZAG	1
4	1298850GT	FOAM PAD, PANEL CRADLE	2
5	77664GT	ADJUSTABLE STRAP ASSY	1
6	1322810GT	TRAY, PANEL CRADLE W/SYMBOL DECALS	1
7	1274167GT	NUT,NYLOCK FLG,5/16-18,F,ZAG	2
8	824086GT	SCREW, HHF, 5/16-18 X 1, 8, ZAG	2

810.1 Half-Mesh and Pipe Cradle Option

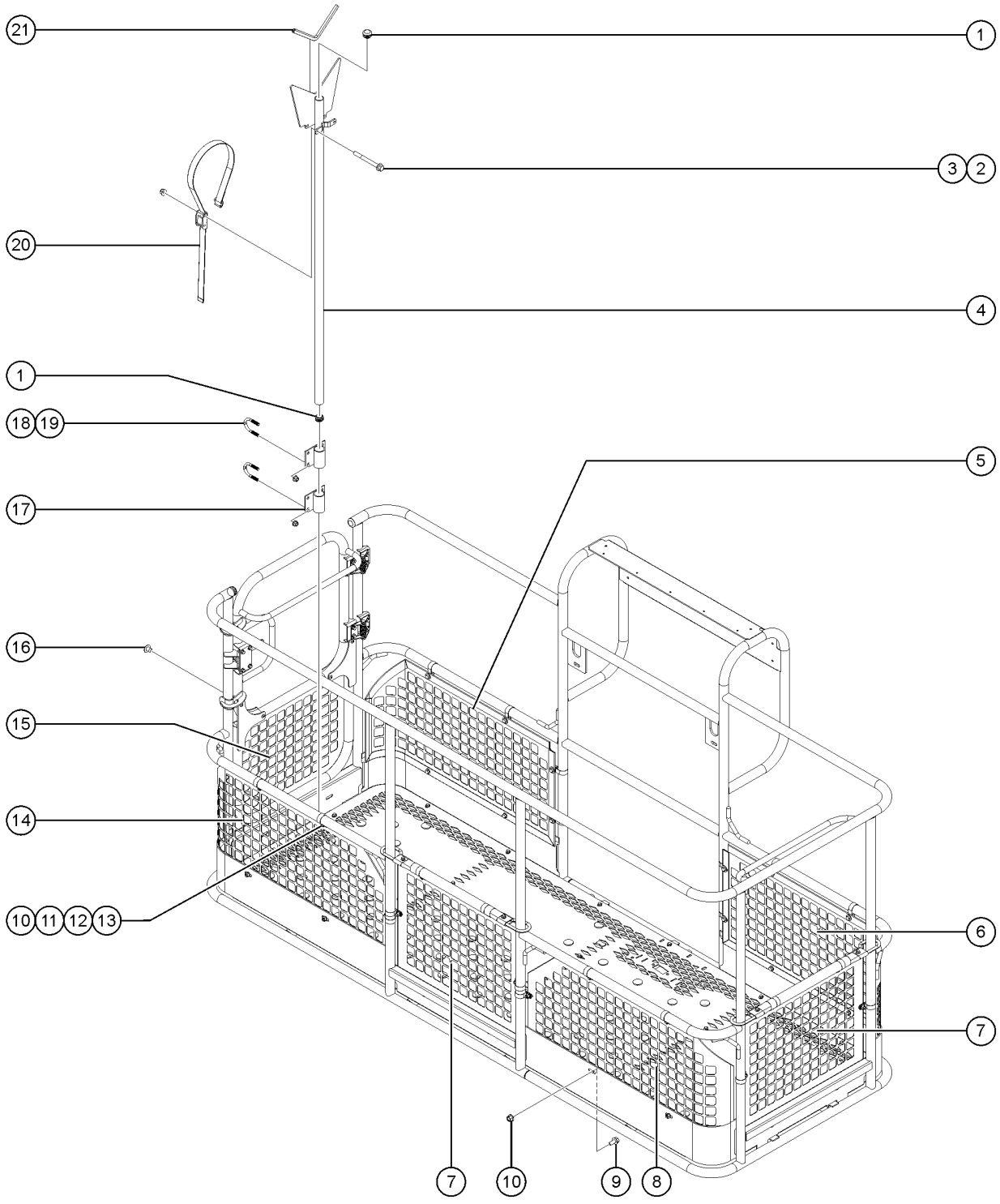

Item	Part No.	Description	Qty.
A	85300GT	PIPE CRADLE ASSY. SERV (ONE)** (ANSI & CE only) (This is a single assembly. Qty 2 of 85300GT required to complete a set)	
A-	65630GT	INSTRUCTIONS-PIPE CRADLE,BOOMS	
1	55753GT	BUMPER, PLASTIC, 1.25 O.D.	4
2	824083GT	SCREW,HHF,1/4-20X2.5,8,ZAG	4
3	1277924GT	NUT,NYLOCK FLG,1/4-20,F,ZAG	4
4	56525GT	WELDMENT, PIPE CRADLE	2
5	1270994GT	PANEL, HALF MESH (8 foot platform)	1
5B	1270314GT	PANEL, HALF MESH (6 foot platform)	1
6	1271019GT	PANEL, HALF MESH (8 foot platform)	1
7	1271061GT	PANEL, HALF MESH (8 foot platform)	2
7B	1271061GT	PANEL, HALF MESH (6 foot platform)	1
8	1271018GT	PANEL, HALF MESH (8 foot platform)	1
8B	1270313GT	PANEL, HALF MESH (6 foot platform)	1
9	824085GT	SCREW, HHF, 5/16-18 X .75, 8, ZAG	12
10	824028GT	NUT,TL FLG,5/16-18,G,ZAG (8 foot platform)	34
10B	824028GT	NUT,TL FLG,5/16-18,G,ZAG (6 foot platform)	33
11	56424GT	CLAMP,1.25X.5 RUBBER-CUSHION (8 foot platform)	22
11B	56424GT	CLAMP,1.25X.5 RUBBER-CUSHION (6 foot platform)	21
12	825358GT	WASHER,FLAT,5/16,USS,ZAG (8 foot platform)	22
12B	825358GT	WASHER,FLAT,5/16,USS,ZAG (6 foot platform)	21
13	1264101GT	SCREW,HHC,5/16-18X1,8,ZAG (8 foot platform)	22
13B	1264101GT	SCREW,HHC,5/16-18X1,8,ZAG (6 foot platform)	21
14	1271040GT	PANEL, HALF MESH (8 foot platform)	1
14B	1270316GT	PANEL, HALF MESH (6 foot platform)	1
15	1285700GT	WELDMENT. GATE, HALF MESH (used on 6' and 8' side entry platforms) (models to SN S85XCH-141 required to order Swing Gate Weldment, refer to 602.1)	
15-	55753GT	BUMPER, PLASTIC, 1.25 O.D.	
16	824207GT	RIVET, STL, STL, DOME, 1/4 X .375, ZAG	8
17	81368GT	WELDMENT,PIPE CRADLE MOUNT	4

810.1 Half-Mesh and Pipe Cradle Option

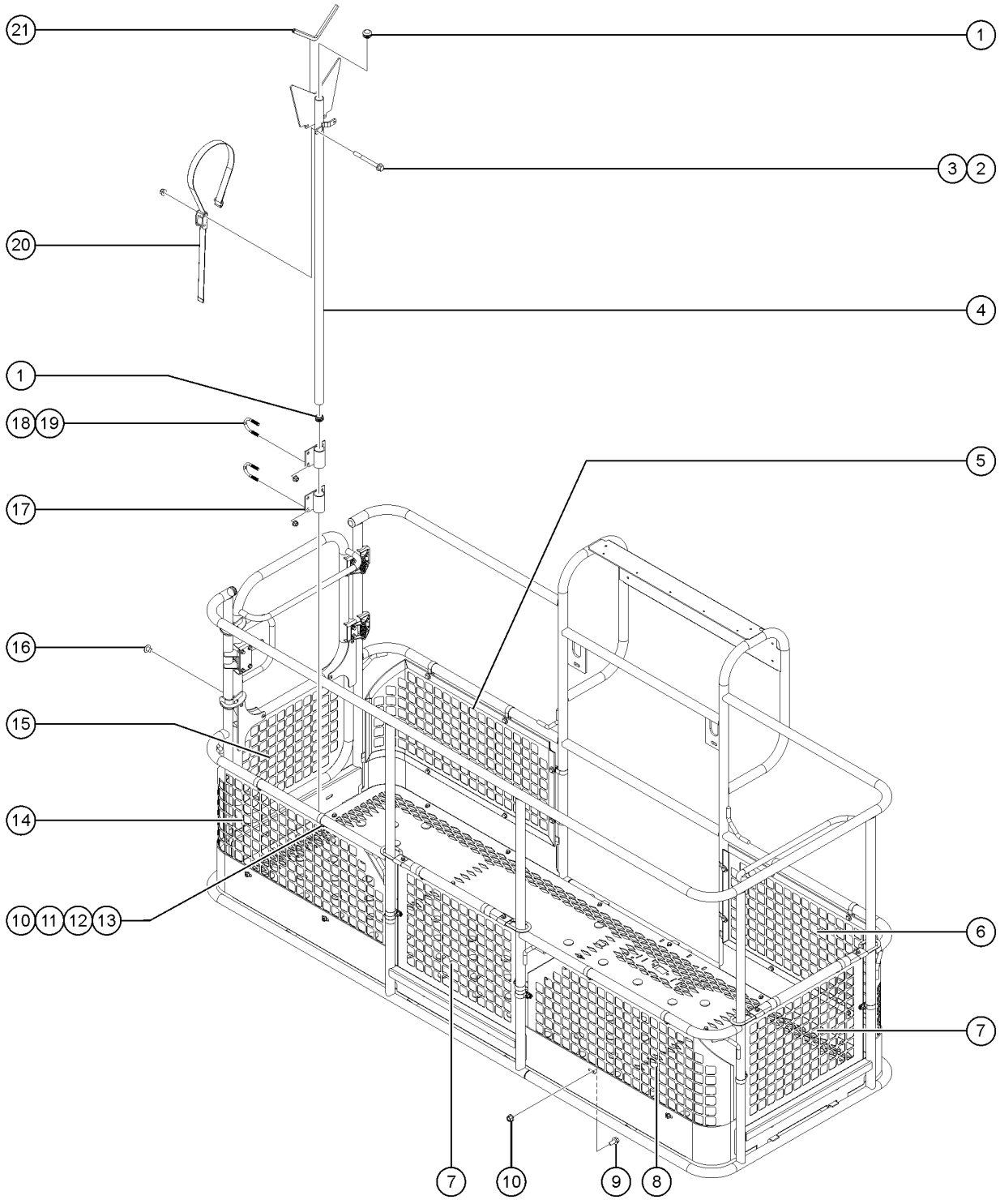

Item	Part No.	Description	Qty.
18	1251600GT	U-BOLT, FLATTENED, 1.5DIA. X 3/8 UNC,ZAG	8
19	1274322GT	NUT,NYLOCK FLG,3/8-16,F,ZAG	16
20	56570GT	STRAP, CONDUIT HOLDER 60"***	2
21	19018-1100GT	TRIMLOCK,BLACK,5/32"	2

811.1 Spare LPG Tank Option

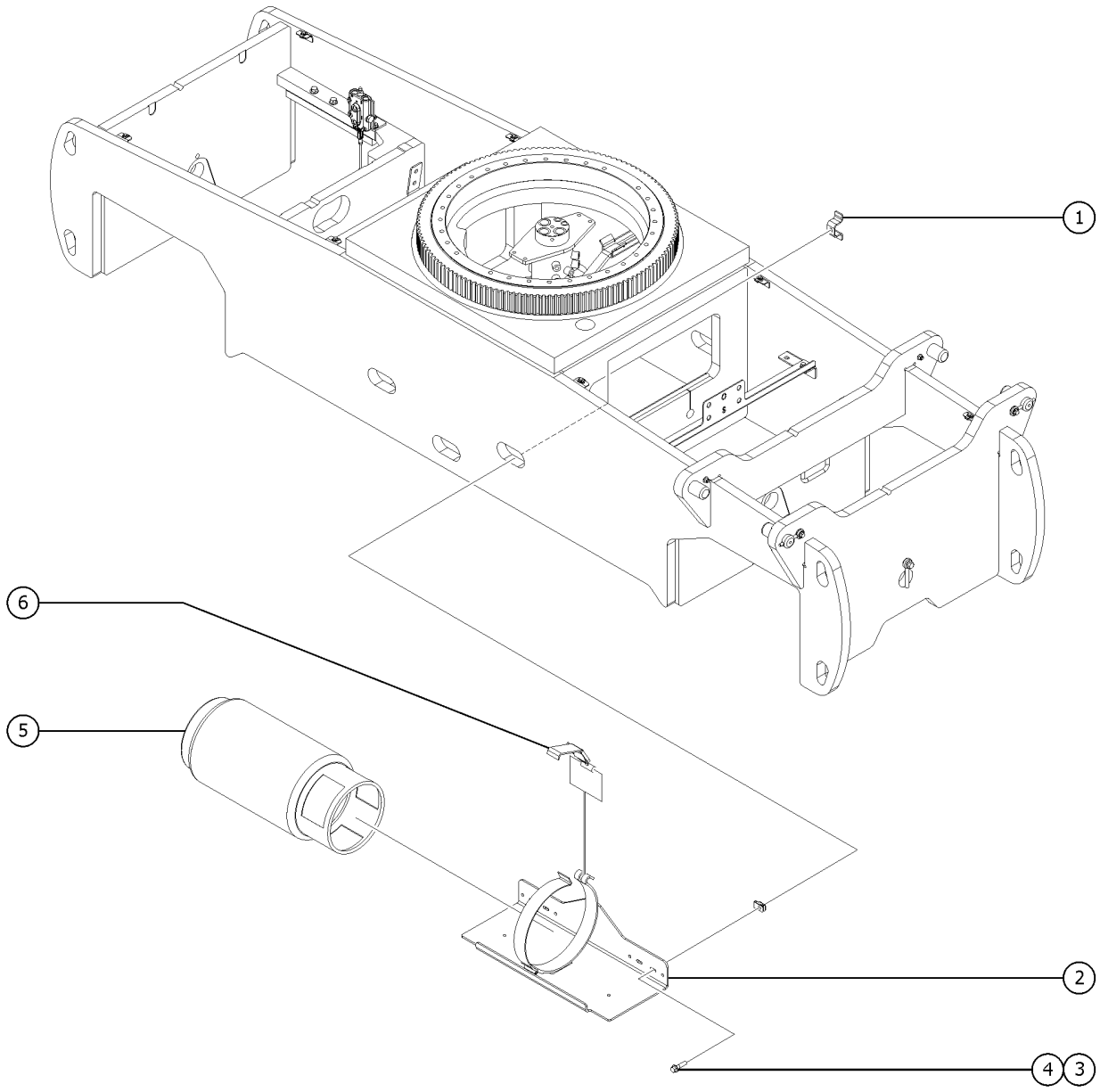

Item	*Part No.*	*Description*	*Qty.*
A	77853GT	OPTION,LP TANK 2ND	
1	77785GT	FORMING,LP BRACKET MOUNT	2
2	60143-SGT	WELD, LPG TANK MOUNT	1
3	824092GT	SCREW, HHF, 3/8-16 X 1.5, 8, ZAG	2
4	29868GT	SPRING CLIP,3/8-16,.05-.20X.73,ZAG	2
5	53605GT	TANK, 7 GAL/33.5 POUND, LP	1
6	49000GT	L.P.TANK LATCH	1

812.1 Welder Option, Chassis Components - View 1

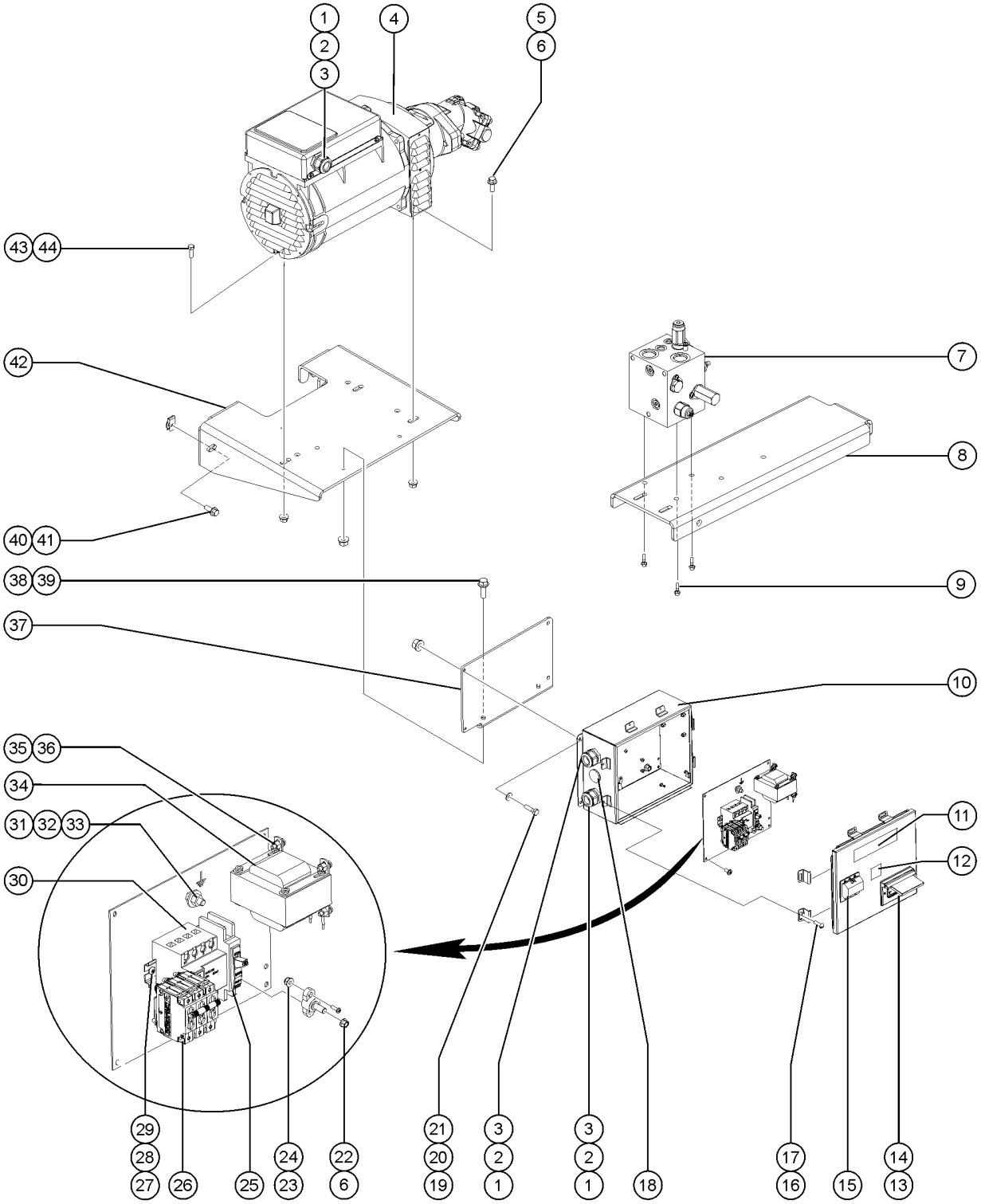

812.1 Welder Option, Chassis Components - View 1

Item	Part No.	Description	Qty.
1	20776GT	CABLE SQUEEZE CONN	3
2	106104GT	O-RING,SEAL RING,1" NPT (PKG)	3
3	18665GT	LOCKNUT,ELECTRIC,1" NPT	3
4	1281786GT	GENERATOR, HYD, 13KW 60HZ, 240V 3PH (ANSI)	
4-	1285150GT	COVER, ACCESS, GEN COUPLING for 1281786	
4-	1285151GT	COUPLING, GEN DRIVE, MOTOR SIDE for 1281786	
4-	1285152GT	COUPLING, GEN DRIVE, GEN SIDE for 1281786	
4-	1285153GT	COUPLING, INSERT, GEN DRIVE for 1281786	
4B	1279871GT	GEN,7.5kW,230VAC,1PH,50HZ,AUS,S80 (AUS)	
5	824092GT	SCREW, HHF, 3/8-16 X 1.5, 8, ZAG to SN S85XCH-448	2
5B	824091GT	SCREW, HHF, 3/8-16 X 1.25, 8, ZAG from SN S85XCH-449	2
6	1274322GT	NUT,NYLOCK FLG,3/8-16,F,ZAG	3
7		REF. MANIFOLD,HYD,LIFTPOWER,WELDER GENERATOR refer to 707.1	
8		REF. FORMING,BRACKET,LATCH refer to 303.1	
9	1257721GT	SCREW,HHF-S,3/8-16X.75,8,ZAG	3
10	1283843GT	ENCLOSURE, JBOX, 12X10	1
11	1283577GT	DECAL, LIFT^POWER, 1X7 INCH	1
12	82237GT	DECAL,DANGER,HIGH VOLTAGE	1
13	74006GT	COVER,GFCI,HORIZONTAL,WEATHER	1
13-	12344GT	NUT,NYLOCK,6-32	
13-	63375GT	SCREW, FHM, 6-32 X .75	
14	80543GT	RECEPTACLE, 120VAC, 20A, GFCI	1
15	1276672GT	BOOT, ENVIRO, 3PH CIRCUIT BREAKER	1
16	285148GT	SCREW, ENCLOSURE, 12X10 JBOX	
17	1296591GT	KIT, BRACKET AND SCREW	
18	106495GT	PLUG,1/2" HUBBLE	1
19	824060GT	SCREW, HHC, 1/4-20 X 1, 8, ZAG to SN S85XCH-448 (ANSI)	4
19B	824059GT	SCREW, HHC, 1/4-20 X .75, 8, ZAG from SN S85XCH-449 (ANSI)	4

812.1 Welder Option, Chassis Components - View 1

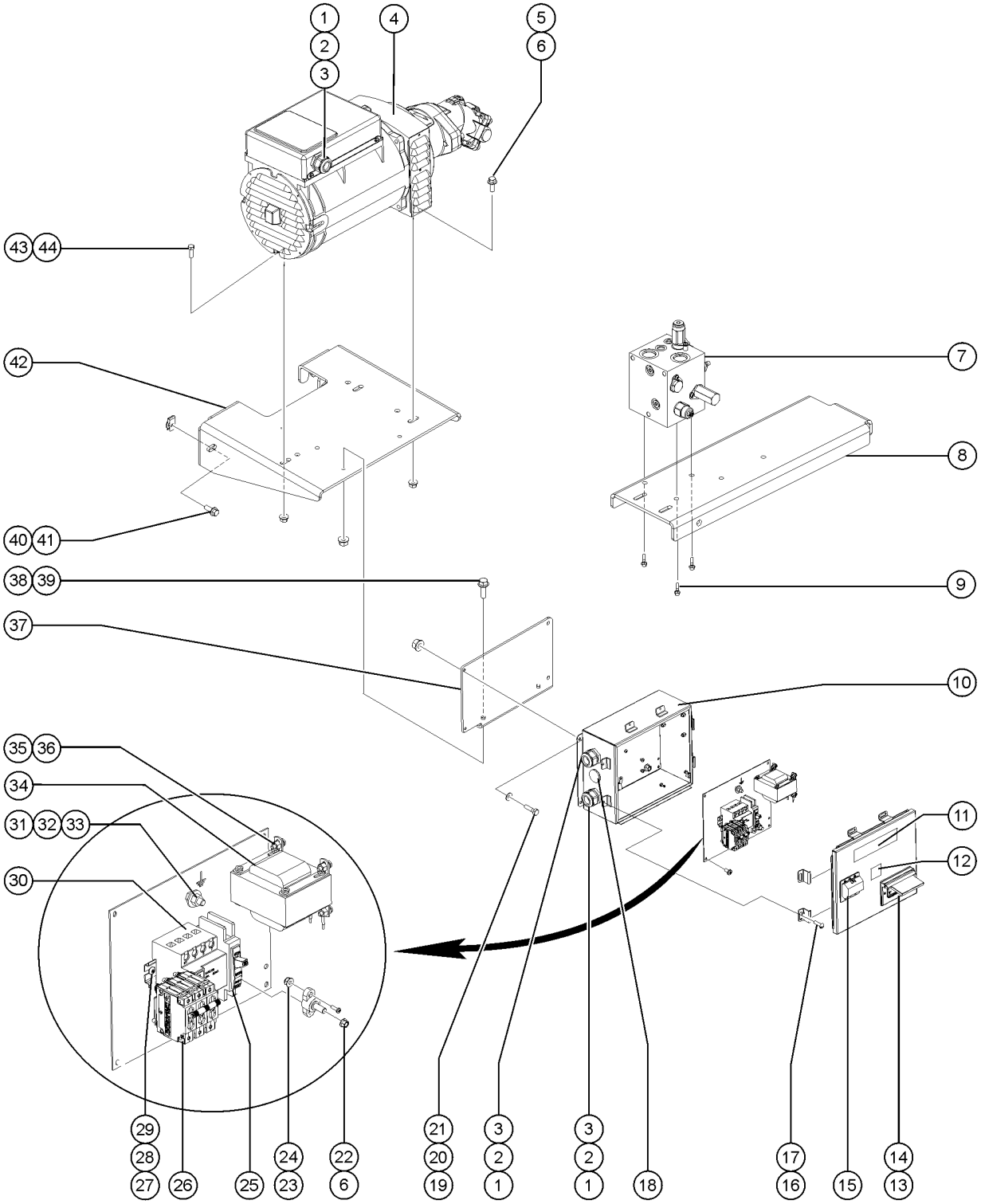

812.1 Welder Option, Chassis Components - View 1

Item	Part No.	Description	Qty.
19C	824060GT	SCREW, HHC, 1/4-20 X 1, 8, ZAG (AUS)	4
20	824113GT	WASHER,FLAT,USS,1/4,ZAG	4
21	1277924GT	NUT,NYLOCK FLG,1/4-20,F,ZAG	4
22	94982GT	STANDOFF, 3/8" BLACK	1
23	1283005GT	NUT,NYLOCK FLG,10-32,A,ZAG	2
24	1257227GT	SCREW,PHPM,10-32X.625,ZAG	2
25	106073GT	CIRCUIT BREAKER,20A,SINGLE PH	1
26	1276986GT	CIRCUIT BREAKER,MAGTRIP,3PH,40A	1
27	54365GT	SCREW,PHIL,PHM,10-32 X .5,SSTL	2
28	825737GT	DIN RAIL, 4.60"	1
29	6178GT	NUT, NYLOCK, 10-32	2
30	824617GT	CIRCUIT BREAKER,GFCI,3PH,63A,3	1
31	13000GT	SCREW,HHC,5/16-18 X 1.25	1
32	5397GT	WASHER, FLAT, USS, 5/16-18	1
33	1261250GT	NUT,5/16-18,8,ZAG	1
34	1282963GT	TRANSFORMER, 139 TO 120 VOLT	1
35	1270665GT	SCREW,HHF,10-24X.625,5,ZAG	2
36	1274170GT	NUT, NYLOCK, 10-24, A, ZAG	2
37	1283841GT	FORMING, MOUNT, JBOX 12X10 (ANSI)	1
37B	111576GT	FORMING,CONTROLBOX MT,WELD GEN (AUS)	1
38	824086GT	SCREW, HHF, 5/16-18 X 1, 8, ZAG	3
39	1274167GT	NUT,NYLOCK FLG,5/16-18,F,ZAG	2
40	824090GT	SCREW,HHF,3/8-16X1,8,ZAG	4
41	29868GT	SPRING CLIP,3/8-16,.05-.20X.73,ZAG	4
42	1268186GT	BRACKET, GENERATOR 12 KW	1
43	1264101GT	SCREW,HHC,5/16-18X1,8,ZAG to SN S85XCH-448	1
43B	1255538GT	SCREW,HHC,M8-1.25X30,DIN933,10.9,ZAB from SN S85XCH-449	1
44	1274167GT	NUT,NYLOCK FLG,5/16-18,F,ZAG to SN S85XCH-448	1

812.1 Welder Option, Chassis Components - View 1

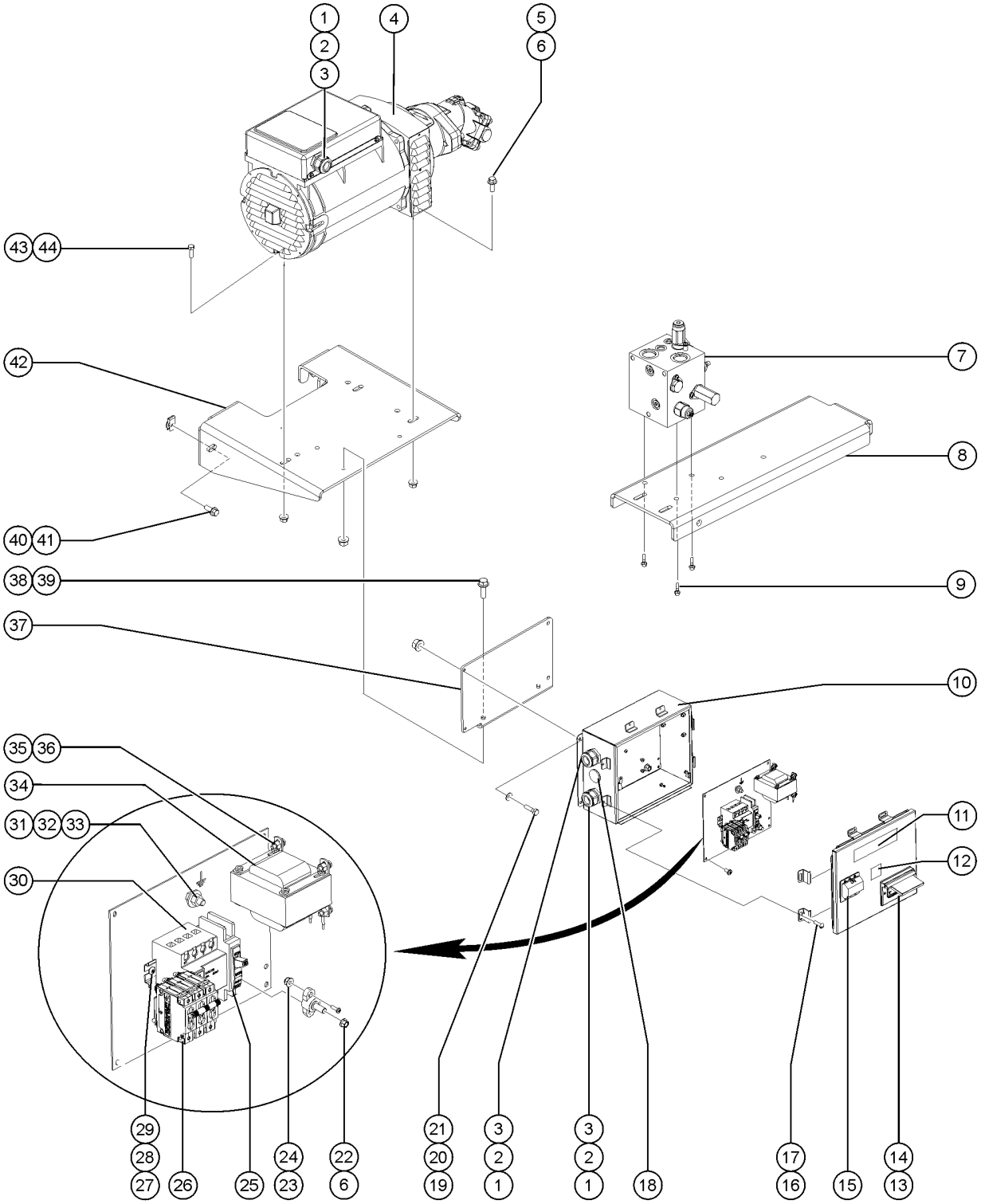

812.1 Welder Option, Chassis Components - View 1

Item	*Part No.*	*Description*	*Qty.*
44B	1283014GT	NUT,NYLOCK FLG,M8-1.25,DIN6926,10,ZAB from SN S85XCH-449	1

812.2 Welder Option, Chassis Components - View 2

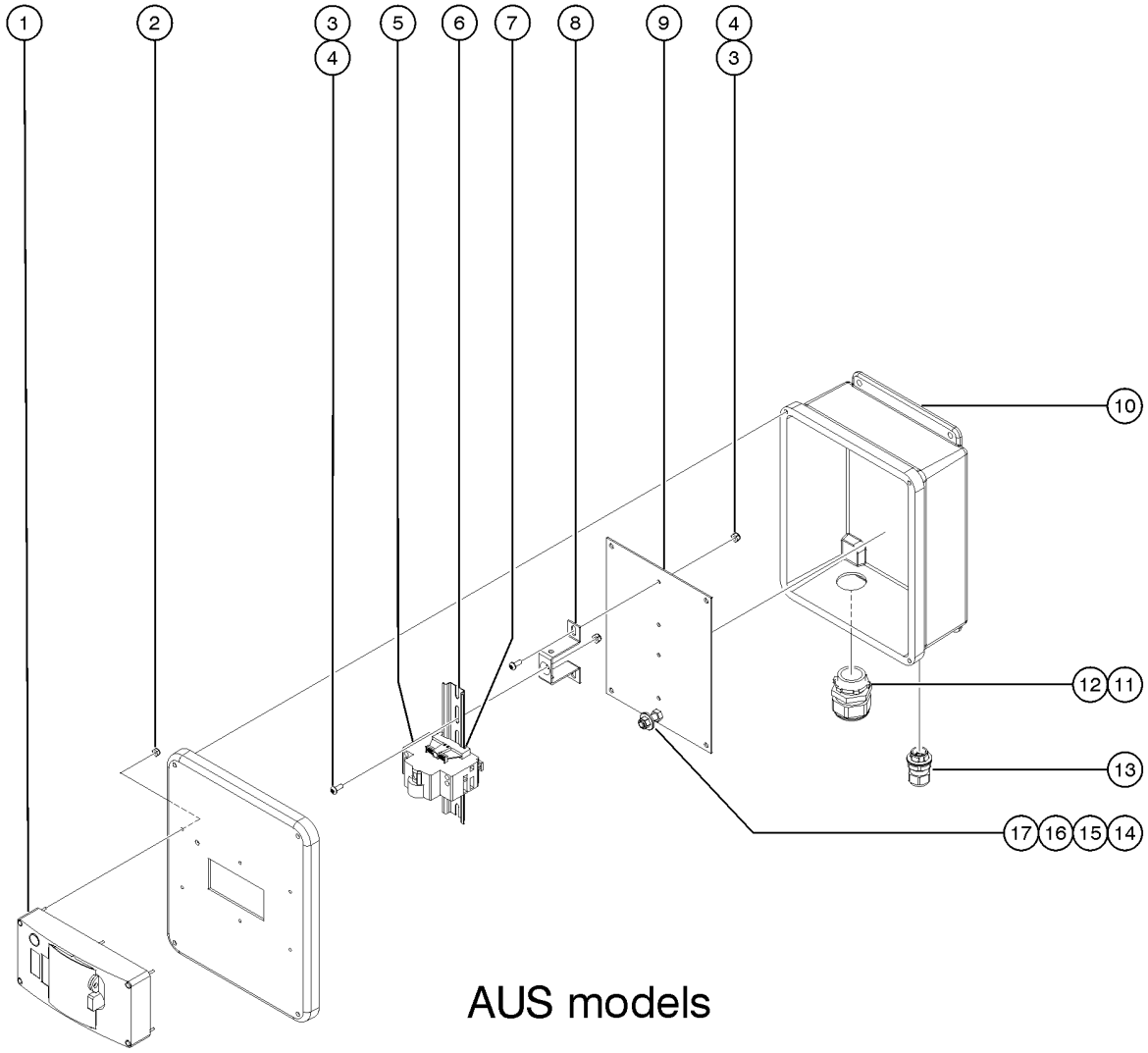

812.2 Welder Option, Chassis Components - View 2

Item	Part No.	Description	Qty.
1	1258687GT	MOUNTING COVER KIT WITH NEON	1
2	12344GT	NUT,NYLOCK,6-32	6
3	54365GT	SCREW,PHIL,PHM,10-32 X .5,SSTL	6
4	6178GT	NUT, NYLOCK, 10-32	6
5	1258674GT	RCBO, 16A/30MA TRIP, 1P	1
6	822548GT	DIN RAIL, 7.375"	1
7	74913GT	END STOP, DIN RAIL,SCREW CLAMP	2
8	1258689GT	BRACKET,DIN RAIL SUPPORT	2
9	1258688GT	PANEL,AUSSY ENCLOSURE BACK	1
10	1289554GT	BOX, AUS JBOX, CIRCUIT BREAKER	1
11	20776GT	CABLE SQUEEZE CONN	1
12	18665GT	LOCKNUT,ELECTRIC,1" NPT	1
13	1287081GT	CORD GRIP, CLICK 20, BLACK, 0.276-0.512	1
14	6782GT	NUT, NYLOCK, 5/16-18	1
15	5397GT	WASHER, FLAT, USS, 5/16-18	1
16	1261250GT	NUT,5/16-18,8,ZAG	1
17	13000GT	SCREW,HHC,5/16-18 X 1.25	1

813.1 Welder Option, Platform Components

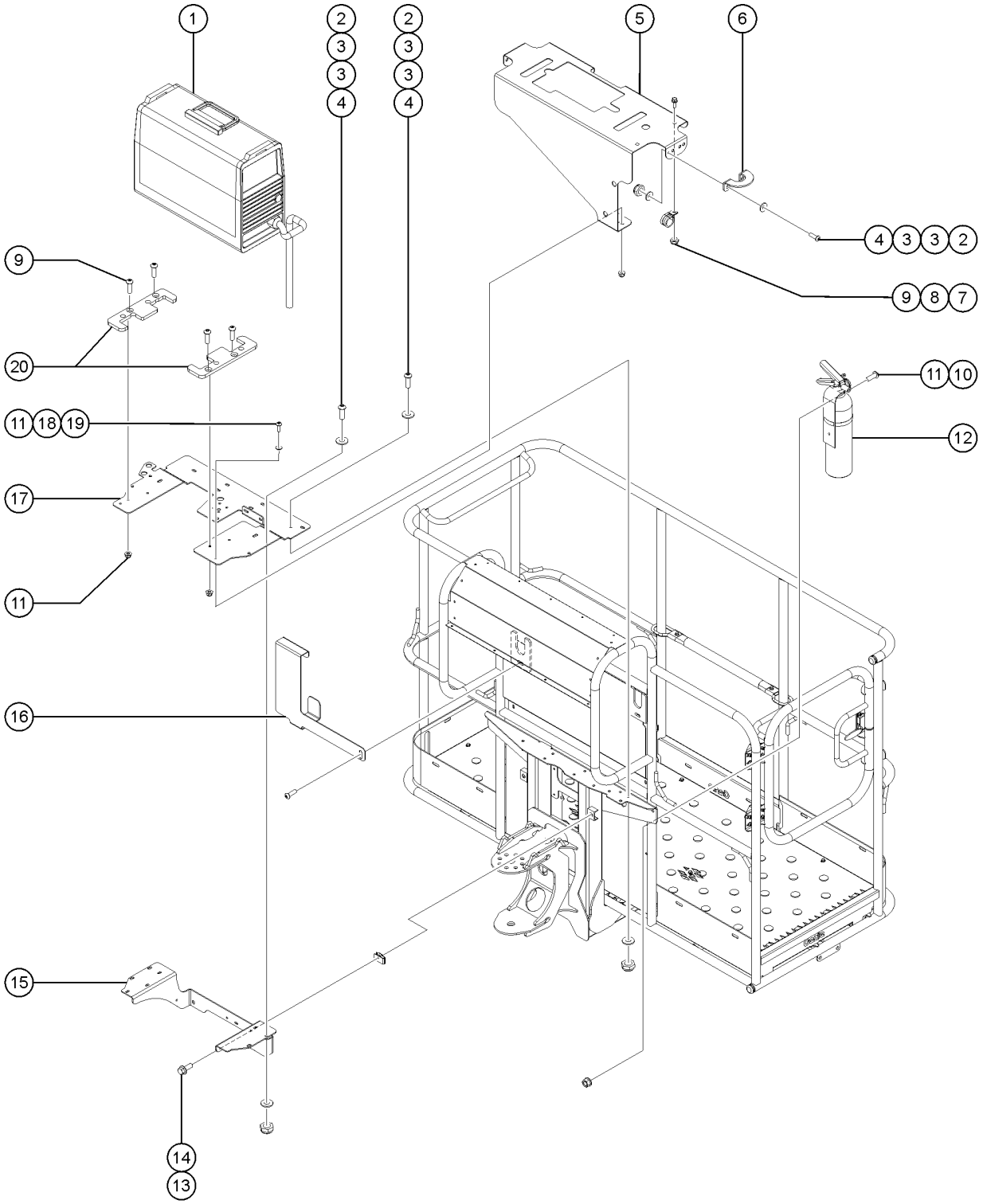

Item	Part No.	Description	Qty.
A	106275GT	KIT,WELD LEADS ASSY,V275S (Lincoln)	1
B	214621GT	SOCKET, BOOT, 3P, 30A, 4 WIRE	1
C	214620GT	SOCKET,3P,30A,4 WIRE, FEM	1
D	214622GT	PLUG, BOOT, 3P, 30A, 4 WIRE	1
E	214623GT	PLUG, 3P,30A, 4 WIRE, MALE	1
F	110276GT	FIRE SLEEVE, 1.25"	23 inches
G	110277GT	FIRE SLEEVE, 2.0" (S-85 XC)	54 inches
H	110277GT	FIRE SLEEVE, 2.0" (S-85 XC)	31 inches
I	110276GT	FIRE SLEEVE, 1.25" Qty. 1 (53 inches), (S-80 XC)	53 inches
1	1312271GT	WELDER,MILLER,CST 282 (Miller Welder)	1
1B	101525GT	WELDER,INVERTEC V275-S (lincoln)	1
1B-	106141GT	SCREW,SECURITY,1/4-20 X 1.75LG	
1B-	824113GT	WASHER,FLAT,USS,1/4,ZAG	
1B-	106273GT	BIT,T-27,TORX SOCKET,SECURITY	
2	1277209GT	SCREW,BHC-PIN,5/16-18X.75,SS	15
2-	1277202GT	BIT,3/16,HEX SOCKET,SECURITY,1/4 SHANK	
3	825358GT	WASHER,FLAT,5/16,USS,ZAG	30
4	1283027GT	NUT,LP NYLOCK,5/16-18,2,ZAG	15
5	1277207GT	BRACKET,WELDER COVER,XC	1
6	217366GT	BRACKET,WELDER TOP	2
7	1283026GT	NUT,LP NYLOCK,1/4-20,2,ZAG (lincoln)	2
8	18666GT	CLAMP,1.00,#16 X 1/4,RUB CUSH (lincoln)	
9	824078GT	SCREW,HHF,1/4-20X.75,8,ZAG (Miller Welder)	4
9B	824078GT	SCREW,HHF,1/4-20X.75,8,ZAG (lincoln)	2
10	1262432GT	SCREW,HHC,1/4-20X.875,8,ZAG	2

813.1 Welder Option, Platform Components

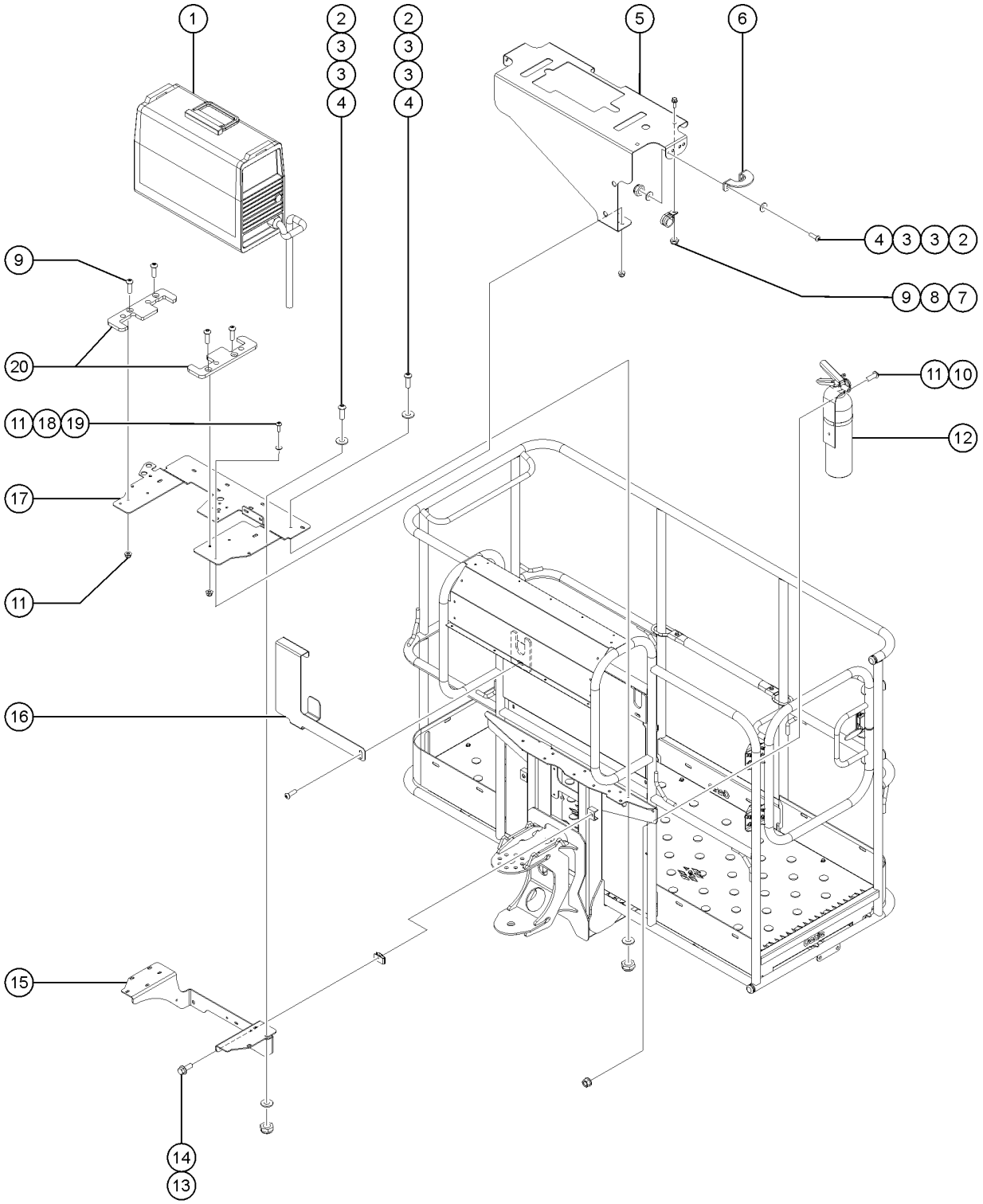

Item	Part No.	Description	Qty.
11	1277924GT	NUT,NYLOCK FLG,1/4-20,F,ZAG (lincoln)	2
11B	1277924GT	NUT,NYLOCK FLG,1/4-20,F,ZAG (Miller Welder)	8
12	88406GT	FIRE EXTINGUISHER	1
13	824090GT	SCREW,HHF,3/8-16X1,8,ZAG	2
14	29868GT	SPRING CLIP,3/8-16,.05-.20X.73,ZAG	2
15	1277206GT	FORMING,WELD MNT SPRT,LOWER,XC	1
16	106204GT	BRACKET,V275S WELD LEADS	1
17	1277205GT	FORMING,WELDER SPRT BRKT,XC	1
17-	121582GT	CLAMP,CABLE STRAIN RELIEF	
18	824113GT	WASHER,FLAT,USS,1/4,ZAG (Miller Welder)	1
19	106860GT	SCREW,SECURITY,1/4-20 X 1.00LG (Miller Welder)	1
20	1312547GT	UHMW,MILLER WELDER RETENTION	2

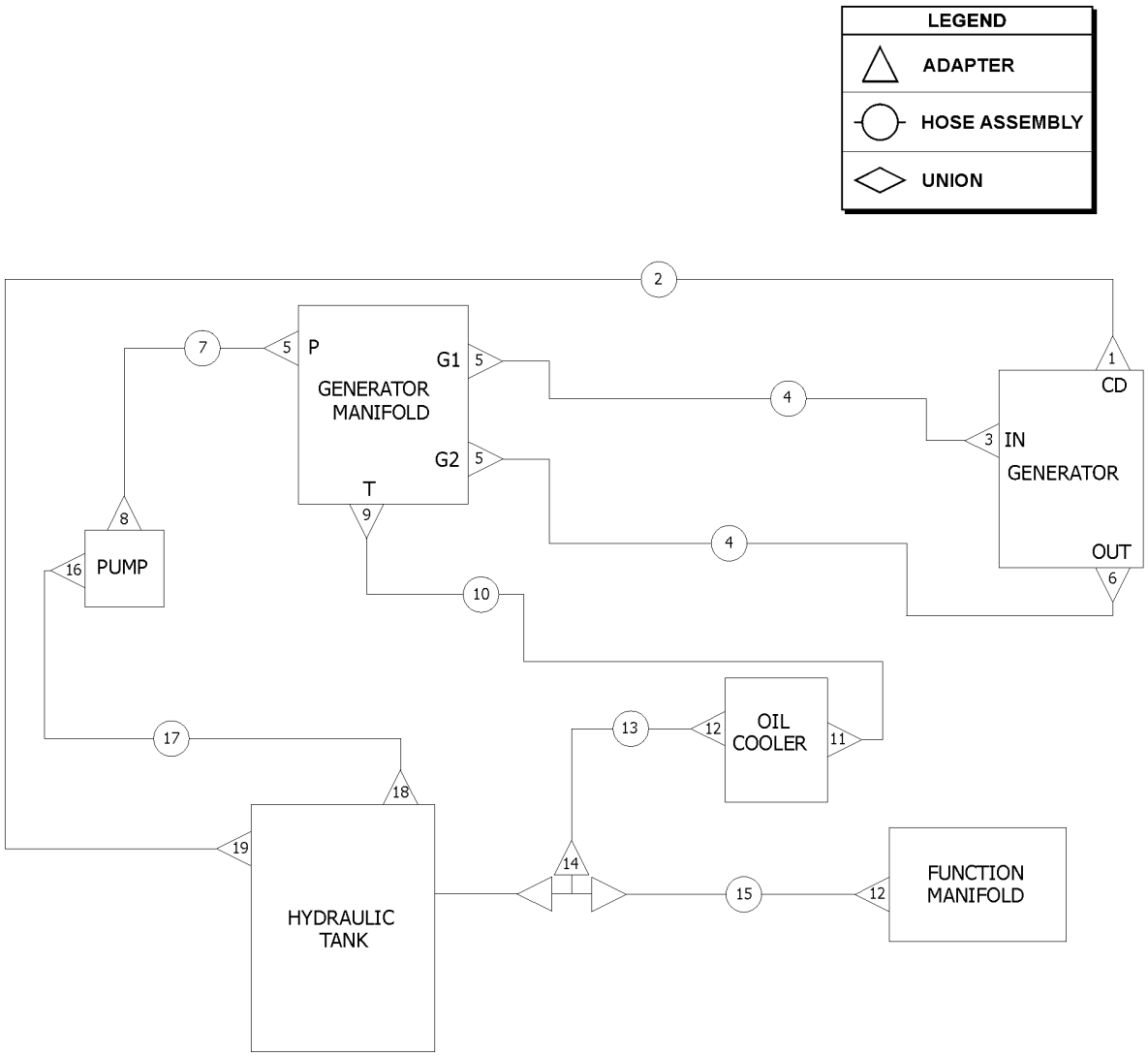
LEGEND
ADAPTER
HOSE ASSEMBLY
UNION
2
7
5
P
GENERATOR
MANIFOLD
G1
5
G2
5
T
9
1
CD
4
3
IN
GENERATOR
OUT
6
8
16
PUMP
4
10
17
13
12
OIL
COOLER
11
18
19
14
15
12
FUNCTION
MANIFOLD
HYDRAULIC
TANK

Item	Part No.	Description	Qty.
1	48915GT	ELBOW,90D,520220-6	1
2	49128-4029GT	HOSE ASSY,3/8,90 FEM,STR FEM	1
3	48975GT	CONN,520120-12-10	1
4	89871-2898GT	HOSE ASSY,3/4,STR FEM,STR FEM	2
5	48963GT	FITTING,ELBOW,45D,520320-12***	3
6	48974GT	ELBOW,90D,520220-12-10	1
7	94374-9730GT	HOSE ASSY,3/4,90 FEM,STR FEM	1
8	48960GT	FITTING,CONN,520120-12***	1
9	48992GT	ELBOW,45D,520320-16-12	1
10	88942-6654GT	ASSY, HOSE, HYD, -16, 250, STR, 90	1
11	48985GT	ELBOW,45D,520320-16	1
12	48983GT	ELBOW,90D,520220-16	2
13	88949-4328GT	ASSY, HOSE, HYD, -16, 250, STR, STR	1
14	1283576GT	TEE, BRANCH, -16M-16F-16M, ORFS	1
15	88942-6754GT	HOSE ASSY,1,90 FEM,STR FEM	1
16	88936GT	CONN,520120-20-16	1
17	88943-9336GT	HOSE ASSY,1.25 INCH,90 FEM,STR FEM	1
18	61083GT	CONN,520120-24	1
19	48929GT	FITTING,ELBOW,90D,520220-6-8	1

815.1 3K Hydraulic Generator Option

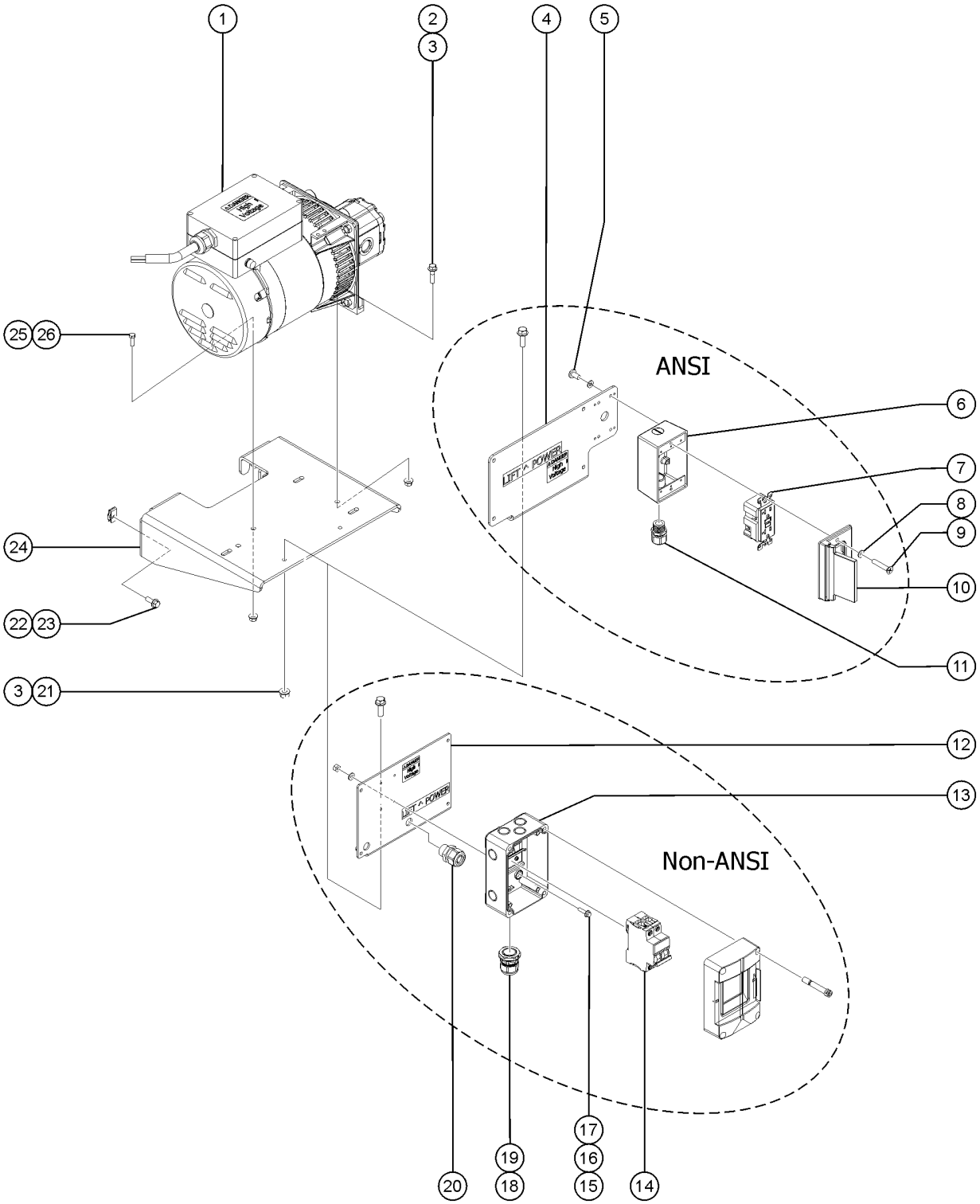

Item	Part No.	Description	Qty.
1	1279869GT	GEN, 3.0 kW, 50Hz, DUAL VOLTAGE (non-ANSI)	1
1A-	824220GT	SCREW,PHPM SEMS ET,10-24X.5,ZA	
1B	1272433GT	GEN, 3.0 KW, 120V/60HZ (ANSI)	1
1B-	824220GT	SCREW,PHPM SEMS ET,10-24X.5,ZA	
2	824087GT	SCREW, HHF, 5/16-18 X 1.25, 8, ZAG	2
3	1274167GT	NUT,NYLOCK FLG,5/16-18,F,ZAG	4
4	1311054GT	BRACKET, S80, LIFT POWER, 3/7 kw JUNCTION BOX (ANSI)	1
5	1257296GT	SCREW,PHPM-ST,8.32X.50,TYPE F (ANSI)	4
6	1310378GT	T-BOX, 2.75 X 4.5 X 2.0** (ANSI)	1
7	80543GT	RECEPTACLE, 120VAC, 20A, GFCI (ANSI)	1
8	1257390GT	WASHER,FLAT,#8,SAE,ZAG	8
9	1253489GT	SCREW,FHPM,6-32 X .75,ZAG (ANSI)	2
10	74006GT	COVER,GFCI,HORIZONTAL,WEATHER (ANSI)	1
11	7056GT	CONN,SQUEEZE,1/2NPT .38-.50,SM (ANSI)	1
11-	128929-300GT	SHRINK TUBE, BLACK 3/4,3:1 (ANSI)	
12	1283841GT	FORMING, MOUNT, JBOX 12X10 (non-ANSI)	1
13	1269086GT	ENCLOSURE, FUSE, MODULAR, 100x150x96, IP65 (non-ANSI)	1
13-	74913GT	END STOP, DIN RAIL,SCREW CLAMP	
14	1261795GT	RCBO, 10A, 30MA, TYPE B, 240V, 50HZ (non-ANSI)	1
14B	231868GT	RCBO,16A,30MA,6KA 110/230VAC (non-ANSI)	1
15	218458GT	SCREW,HHF,M5-0.8X20,DIN6921,10.9,ZAB (non-ANSI)	4
16	826215GT	WASHER,FLAT,M5,DIN125,ZAB (non-ANSI)	4
17	826214GT	NUT,TL,M5-0.8,DIN980,10,ZAB (non-ANSI)	4
18	1287081GT	CORD GRIP, CLICK 20, BLACK, 0.276-0.512 (non-ANSI)	2
19	1269107GT	NUT, PLASTIC, M25, GREY (non-ANSI) to SN S85XCH-422	2
20	7057GT	CONN. SQZ,1/2NPT .39-.56 MED. (non-ANSI)	2
21	824086GT	SCREW, HHF, 5/16-18 X 1, 8, ZAG	2
22	824090GT	SCREW,HHF,3/8-16X1,8,ZAG	4

815.1 3K Hydraulic Generator Option

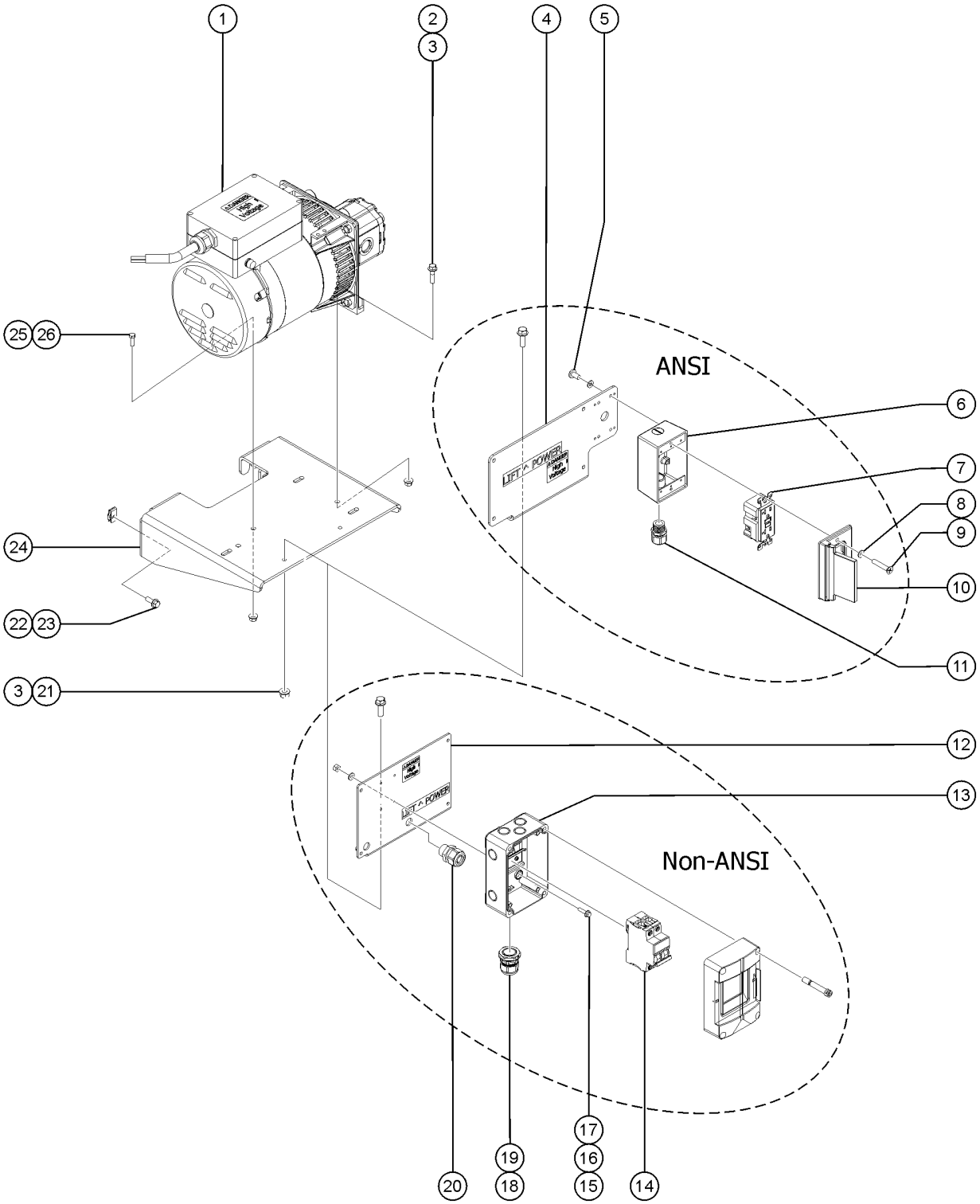

Item	Part No.	Description	Qty.
23	29868GT	SPRING CLIP,3/8-16,.05-.20X.73,ZAG	4
24	1268186GT	BRACKET, GENERATOR 12 KW	1
25	1255538GT	SCREW,HHC,M8-1.25X30,DIN933,10.9,ZAB	1
26	1283014GT	NUT,NYLOCK FLG,M8-1.25,DIN6926,10,ZAB	1

816.1 3K Hydraulic Generator Option - Hoses and Fittings

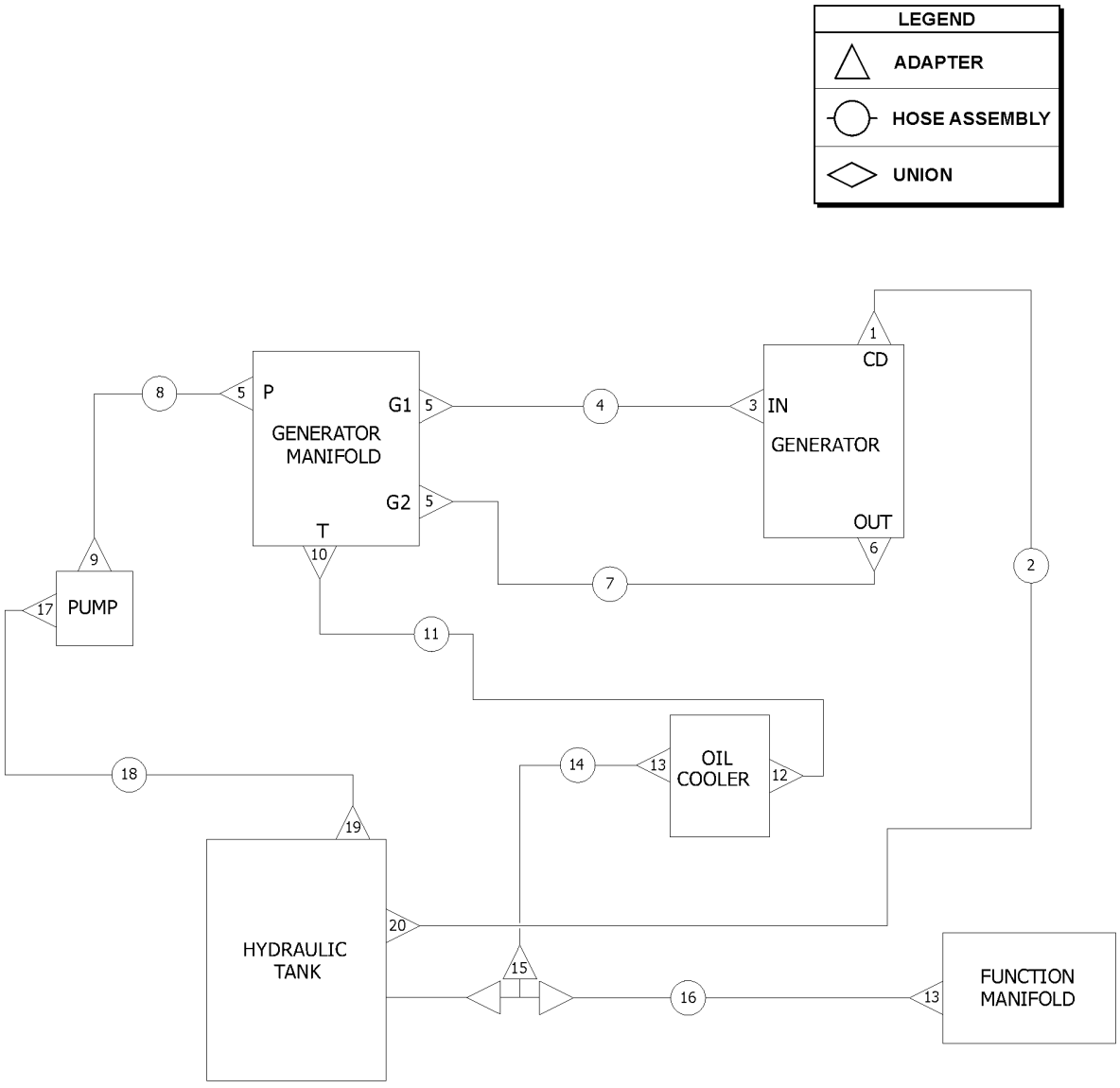

Item	Part No.	Description	Qty.
1	48915GT	ELBOW,90D,520220-6	1
2	49128-4029GT	HOSE ASSY,3/8,90 FEM,STR FEM	1
3	48946GT	CONN,520120-8-10	1
4	54085-2918GT	HOSE ASSY,1/2,90 FEM,STR FEM	1
5	48963GT	FITTING,ELBOW,45D,520320-12***	3
6	54283GT	ELBOW,90D,520220-8-10	1
7	1283720-3266GT	HOSE ASSY,1/2,12-8,90 LONG-8 to SN S85XCH-448	1
7B	102355-3163GT	ASSY, HOSE, HYD, -8, 3000, STR, 45 from SN S85XCH-449	1
8	94374-9730GT	HOSE ASSY,3/4,90 FEM,STR FEM	1
9	48960GT	FITTING,CONN,520120-12***	1
10	48992GT	ELBOW,45D,520320-16-12 to SN S85XCH-448	1
10B	49519GT	CONN,520120-16-12 from SN S85XCH-449	1
11	88942-6654GT	ASSY, HOSE, HYD, -16, 250, STR, 90	1
12	48985GT	ELBOW,45D,520320-16	1
13	48983GT	ELBOW,90D,520220-16	2
14	88949-4328GT	ASSY, HOSE, HYD, -16, 250, STR, STR	1
15	1283576GT	TEE, BRANCH, -16M-16F-16M, ORFS	1
16	88942-6754GT	HOSE ASSY,1,90 FEM,STR FEM	1
17	88936GT	CONN,520120-20-16	1
18	88943-9336GT	HOSE ASSY,1.25 INCH,90 FEM,STR FEM to SN S85XCH-448	1
18B	88943-9136GT	HOSE ASSY,1.25 INCH,90 FEM,STR FEM from SN S85XCH-449	1
19	61083GT	CONN,520120-24	1
20	48984GT	CONN, 520120-16	1

817.1 Oil Cooler Components

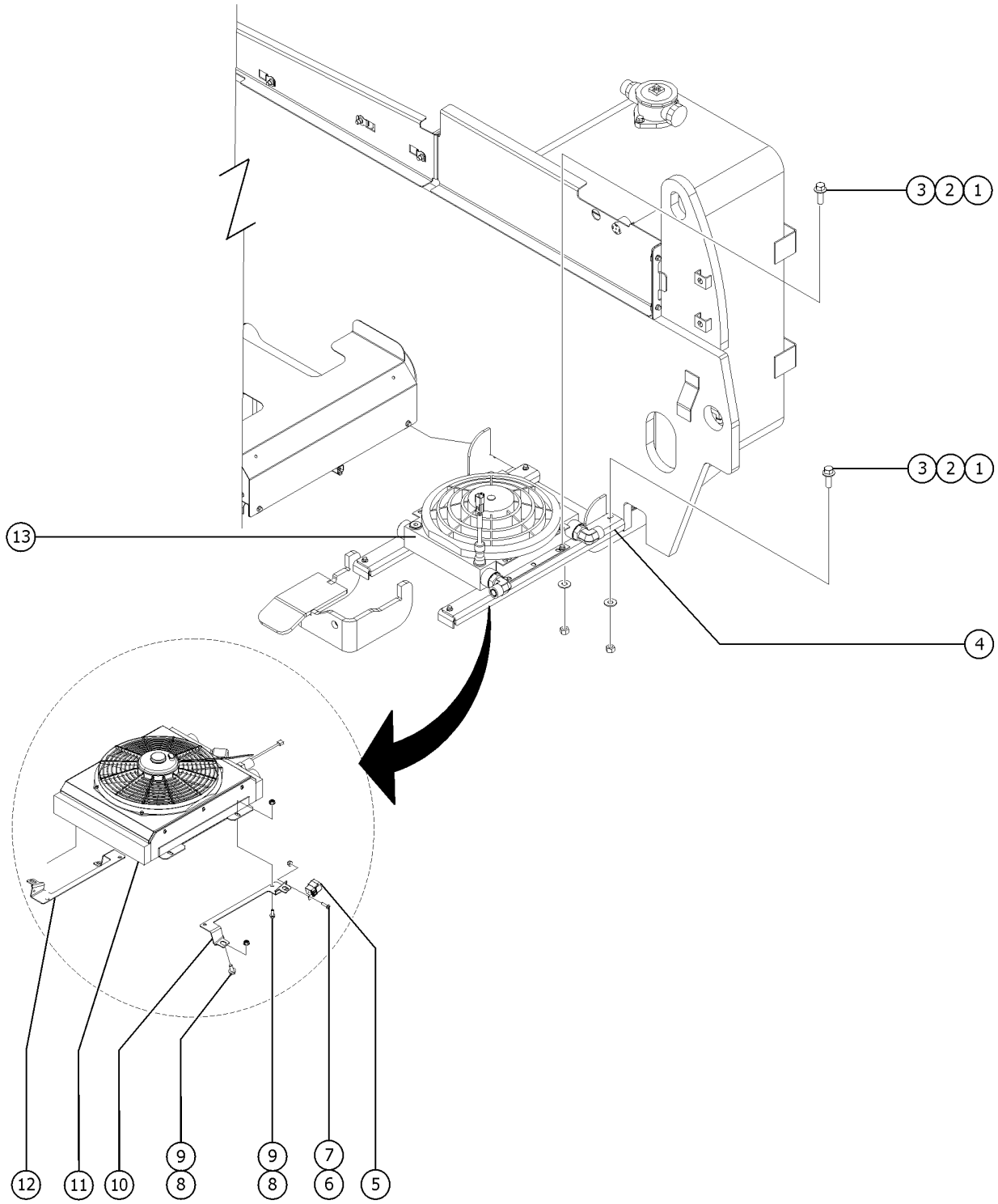

Item	Part No.	Description	Qty.
1	824078GT	SCREW,HHF,1/4-20X.75,8,ZAG	8
2	824113GT	WASHER,FLAT,USS,1/4,ZAG	8
3	1274165GT	NUT,NYLOCK,1/4-20,C,ZAG	8
4	121389GT	FORMING,OIL COOLER SUPPORT	2
5	1254360GT	HARNESS, OIL COOLER, LIFT POWER (relay included)	1
5-	60521GT	RELAY,SEALED 30/40 AMP	
6	824215GT	SCREW, PHPM, 10-32 X .75, ZAG	1
7	1283005GT	NUT,NYLOCK FLG,10-32,A,ZAG	1
8	824090GT	SCREW,HHF,3/8-16X1,8,ZAG	8
9	1274322GT	NUT,NYLOCK FLG,3/8-16,F,ZAG	8
10	1285868GT	FORMING, OIL COOLER SUPPORT, LH	1
11	1284196GT	OIL COOLER, W/FAN, 12VDC, 22.5 X 18.5, RCP (models with Welder / 3K Generator option) (measures 17 inches x 21 inches)	1
11-	48985GT	ELBOW,45D,520320-16	2
11-	1284240GT	ASSEMBLY, SHROUD, RCP COOLER	
11-	1284241GT	COOLER CORE, RCP, 22.5x18.5	
11-	1284242GT	ASSEMBLY, FAN, COOLER, RCP	
11-	1284243GT	TEMP SWITCH, 145F, 3/8 NPT	
12	1285869GT	FORMING, OIL COOLER SUPPORT, RH	1
13	71259GT	OIL COOLER W/FAN, 12VDC (standard) (models without generator option) (measures 13 inches x 13 inches)	1
13-	75854GT	FAN - VENTED	
13-	75855GT	THERMOSTAT -OIL COOLER (71259)	
13-	48992GT	ELBOW,45D,520320-16-12	
13-	49519GT	CONN,520120-16-12	

818.1 Tow Package

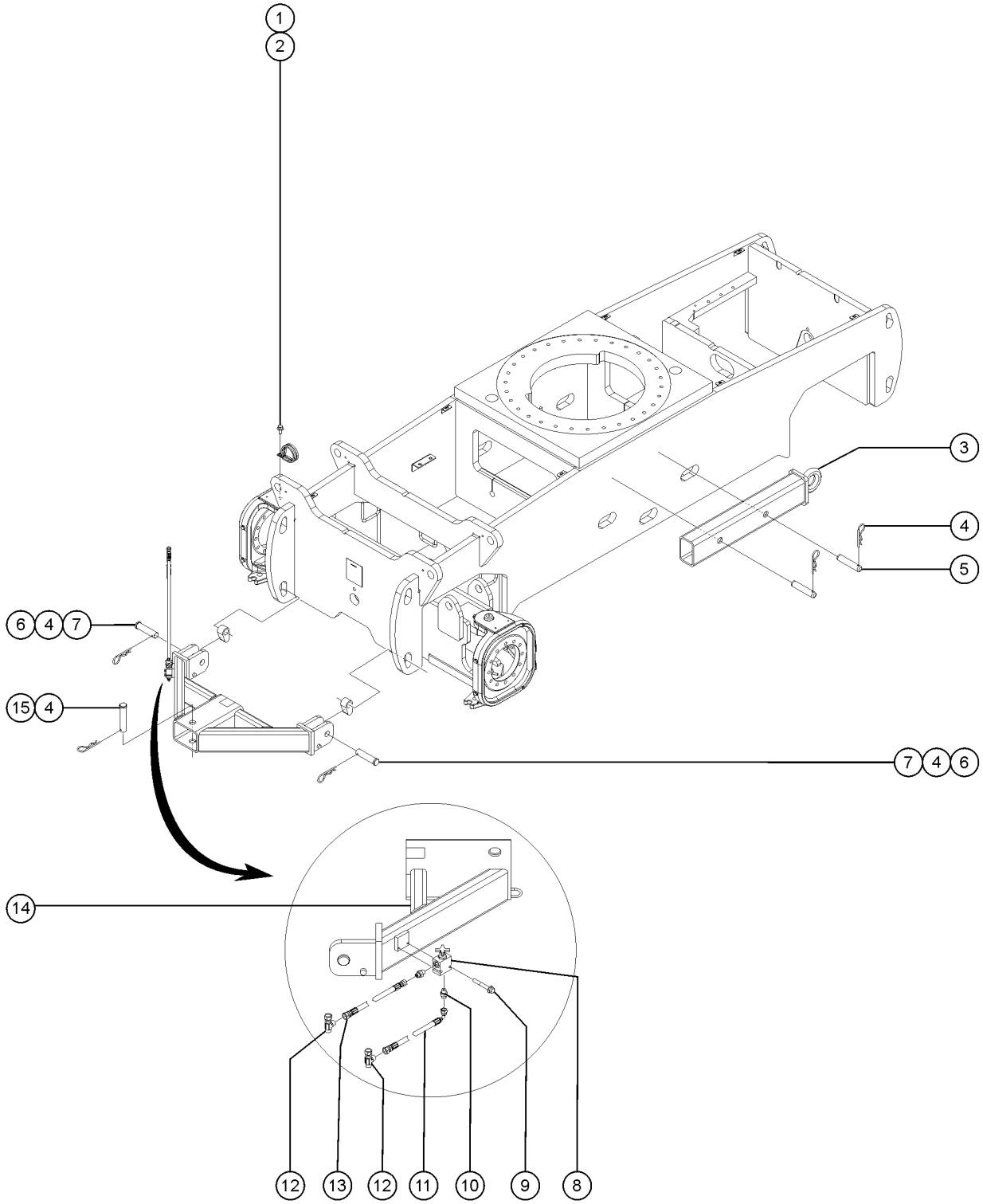

818.1 Tow Package

Item	Part No.	Description	Qty.
1	824089GT	SCREW, HHF, 3/8-16 X .75, 8, ZAG	1
2	61745GT	CLAMP,2.25,#36 X 3/8,RUB CUSH	1
3	81973GT	WELDMENT,PULL BAR	1
4	42111GT	CLIP,HAIR PIN .243 X 5.25	5
5	47025GT	PIN,STORAGE,TOW PACKAGE	2
6	1257868GT	PIN,CLEVIS,1.25X5.0,ZAG	2
7	81975GT	PLATE,CHASSIS ATTACHMENT	2
8	25282GT	VALVE,NEEDLE,BRAKE RELEASE	1
9	824082GT	SCREW, HHF, 1/4-20 X 1.75, 8, ZAG	2
10	48912GT	CONN,520120-4-6***	2
11	49163-8594GT	HOSE ASSY,1/4" 90 FEM,STR FEM	1
12	48875GT	TEE,RUN,SWIVEL,520432-6	2
13	49120-7581GT	HOSE ASSY,1/4"STR FEM,STR FEM	1
14	81972GT	WELDMENT,TOW BAR	1
15	1257869GT	PIN,CLEVIS,1.25X6.0,ZAG	1

819.1 Air Line/Power to Platform

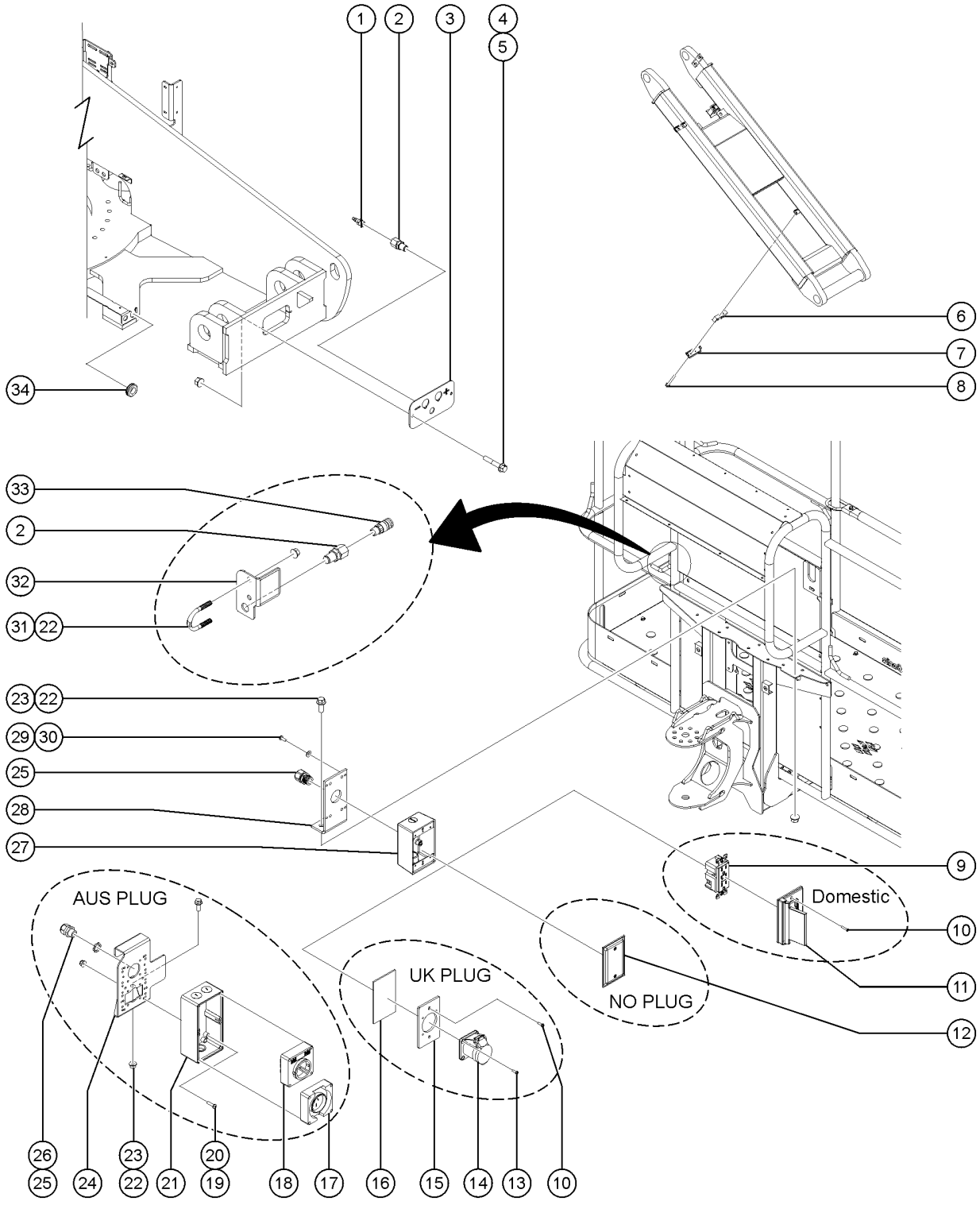

Item	Part No.	Description	Qty.
A	T109693GT	AIRLINE ASSY, S80 (S-80 XC)	11 54 inches
B	T109692GT	AIRLINE ASSY, S85 (S-85 XC)	13 20 inches
C	119403GT	CONN,PLUG 120 AC/15A DOMESTIC Domestic	1
D	144161GT	PLUG,PWR,UK,16AMP,3PIN,BLK UK Plug	1
E	1269052GT	SHRINK TUBE, CAP, BLACK, 0.86" No Plug (to SN S85XCH-971)	1
F	7057GT	CONN. SQZ,1/2NPT .39-.56 MED.	
G	6935GT	CONN, SQZ, 1/2NPT, LOCKNUT	
1	49214GT	MALE PIPE THD,1/4" SER,3/8"X18	1
2	49212GT	FEMALE BULKHEAD CONNECTOR-8	2
3	121595GT	PLATE,WELD OPTION	1
4	824081GT	SCREW, HHF, 1/4-20 X 1.5, 8, ZAG	2
5	824027GT	NUT, TL FLG, 1/4-20, G, ZAG	2
6	121085GT	CLAMP,ELEC,SHORT LINK	2
7		Ref. CLAMP,TOP,SHORT LINK (refer to 506.1)	
8	1256123GT	SCREW,HHC,1/4-20X3.25,8,ZAG	4
9	13585GT	OUTLET, 110V	1
10	1253489GT	SCREW,FHPM,6-32 X .75,ZAG	2
11	74006GT	COVER,GFCI,HORIZONTAL,WEATHER	1
12	10777GT	COVER,BLANK	1
13	1255788GT	SCREW,FHPM,8-32X.375,ZAG	4
14	T112560GT	RECEPTACLE,UK,110V	1
15	T112561GT	PLATE,UK,POWER TO PLAT	1
16	74052GT	GASKET,COVER,GFCI,WEATHERPROOF	1
17	1284975GT	SOCKET OUTLET 1P+N+E 250V 15A (AUS Plug Only)	1
18	1284974GT	SWITCH, 7KW, AUS (AUS Plug Only)	1
19	824215GT	SCREW, PHPM, 10-32 X .75, ZAG (AUS Plug Only)	4

819.1 Air Line/Power to Platform

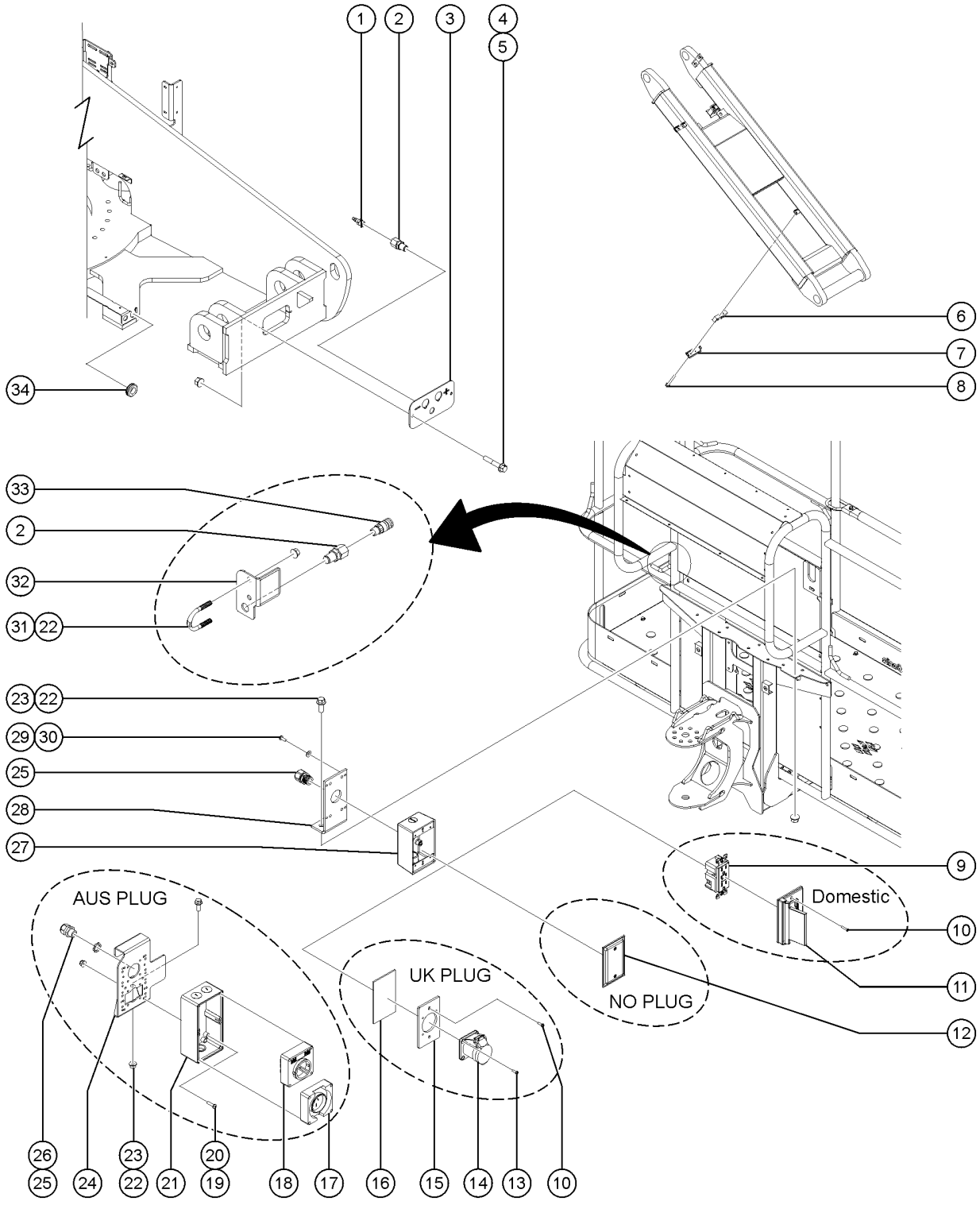

Item	Part No.	Description	Qty.
20	1283005GT	NUT,NYLOCK FLG,10-32,A,ZAG	4
		(AUS Plug Only)	
21	1284973GT	T-BOX, AUS, 2 GANG	1
		(AUS Plug Only)	
21-	1284977GT	HARNESS, JUMPER TBOX. AUS	1
		(AUS Plug Only)	
22	1274322GT	NUT,NYLOCK FLG,3/8-16,F,ZAG	4
23	824090GT	SCREW,HHF,3/8-16X1,8,ZAG	2
24	826624GT	FORMING,POWER TO PLAT	1
		(AUS Plug Only)	
25	7057GT	CONN. SQZ,1/2NPT .39-.56 MED.	1
26	6935GT	CONN, SQZ, 1/2NPT, LOCKNUT	1
		(AUS Plug Only)	
27	1310379GT	T-BOX 2.75 X 4.5 X 2.5	1
28	1311043GT	BRACKET,POWER TO PLAT, DOM	1
29	1257296GT	SCREW,PHPM-ST,8.32X.50,TYPE F	4
30	1257390GT	WASHER,FLAT,#8,SAE,ZAG	4
31	1251600GT	U-BOLT, FLATTENED, 1.5DIA. X 3/8 UNC,ZAG	1
32	1275087GT	FORMING, AIR TO PLAT	1
33	49215GT	MPT,CPLR,1/4"SER,3/8"X18	1
34	1279531GT	GROMMET, SBR, 0.88 X 0.50 X 1.63 IN	1

820.1 Aircraft Protection Package

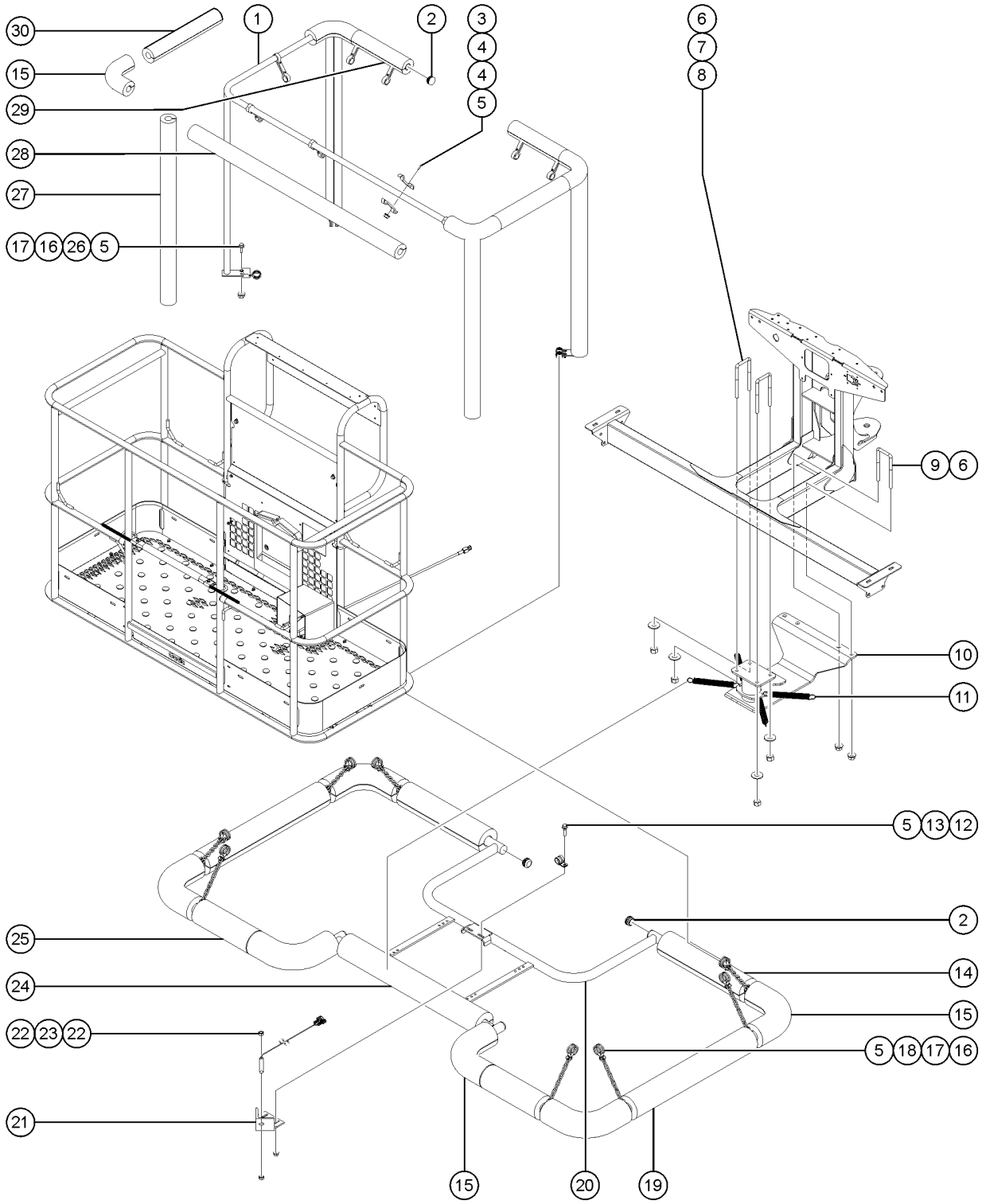

Item	Part No.	Description	Qty.
A	128203GT	SWITCH TOGGLE ASSY SPDT 2P MOM (not shown)	1
1	46188GT	WELDMENT, AIRCRAFT TOP BUMPER Include item 26	1
2	55753GT	BUMPER, PLASTIC, 1.25 O.D.	6
3	824079GT	SCREW,HHF,1/4-20X1,8,ZAG	20
4	122073GT	SUPPORT, RAILING	20
5	1277924GT	NUT,NYLOCK FLG,1/4-20,F,ZAG	46
6	66472GT	U-BOLT, SQR, 3/8-16X2X5, PLTD	4
7	1255758GT	WASHER,FLAT,3/8,USS,ZAG	4
8	824038GT	NUT, TL JAM, 3/8-16, A, ZAG	4
9	824029GT	NUT, TL FLG, 3/8-16, G, ZAG	4
10	1274645GT	WELDMENT,SKID PLATE,AIRCRAFT PROT.	1
11	822769GT	SPRING,EXTENSION,1.92LB/IN	4
12	824079GT	SCREW,HHF,1/4-20X1,8,ZAG	2
13	6833GT	CLAMP,0.50,#8 X 1/4,RUB CUSH	1
14	75617-1550GT	PADDING,FOAM 3.5"OD X 1.50"ID	2
15	75636GT	PADDING,FOAM,3.0"X1.50ID 90DEG	10
16	21618GT	CLAMP,1.13,#18 X 1/4,RUB CUSH	24
17	824078GT	SCREW,HHF,1/4-20X.75,8,ZAG	24
18	56426-700GT	CHAIN,NO.2 (11 LINKS)	8
19	75617-2275GT	PADDING,FOAM 3.5"OD X 1.50"ID	2
20	822759GT	WDMT,AIRCRAFT SENSOR BUMPER	1
21	77797GT	WELDMENT, SENSOR MOUNT	1
22	88390GT	NUT,HEX,M8,PLASTIC	2
23	1269721GT	HARNESS, PROX SENSOR,ACP (includes 27391 proximity sensor)	1
23-	1269734GT	HARNESS, PROX, MANIFOLD, PLAT	
23-	27391GT	PROXIMITY SENSOR***	
23-	29261GT	MAGNET,NEODYMIUM,.375 X .100	
24	822768GT	FOAM,AIRCRAFT PROTECTION	1

820.1 Aircraft Protection Package

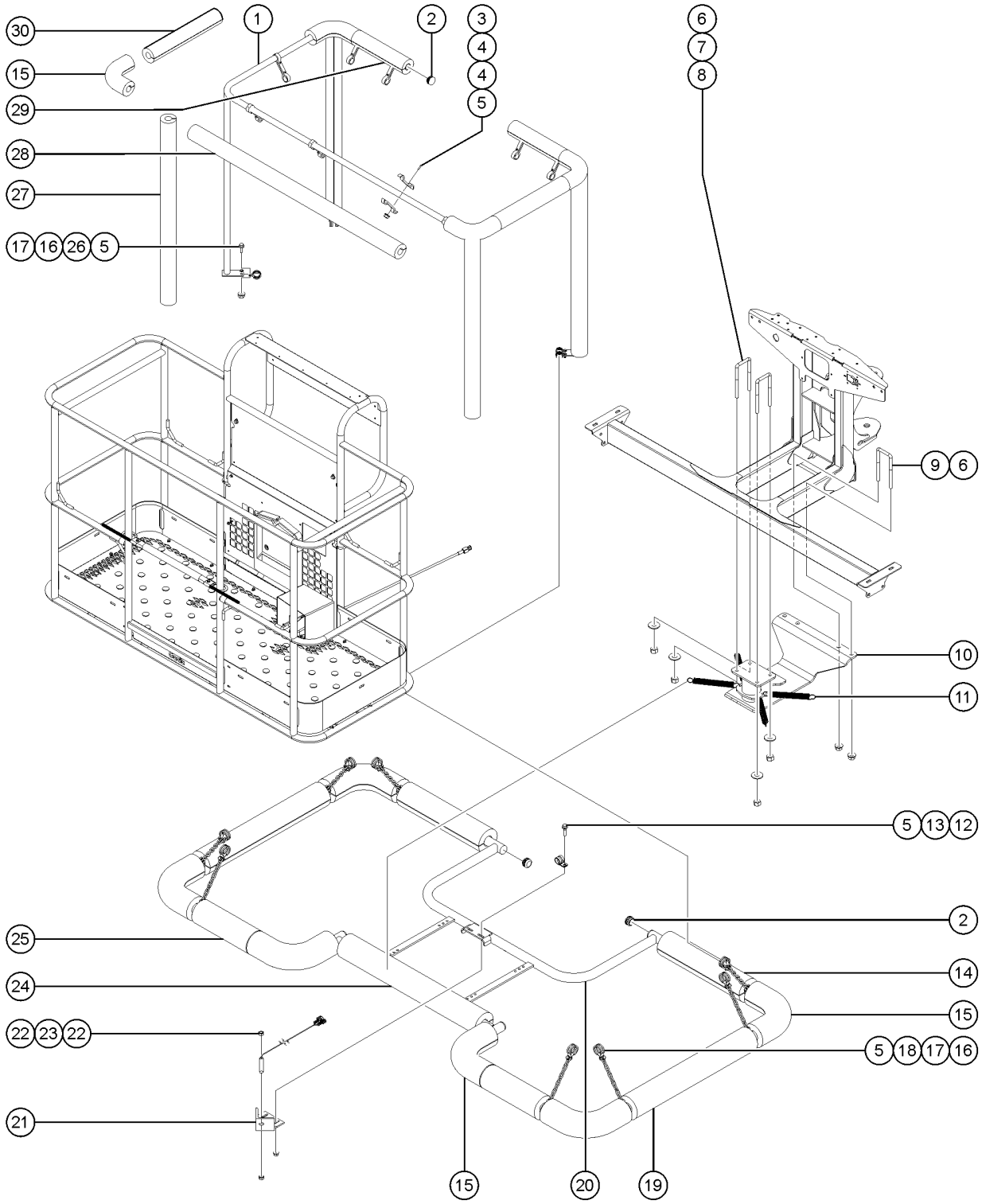

Item	Part No.	Description	Qty.
25	75617-1025GT	PADDING,FOAM 3.5"OD X 1.50"ID	2
26	81802GT	PLATE, AIRCRAFT PROTECTION OPT	4
27	1259329GT	PADDING, FOAM, 46.5"	4
28	75617-3138GT	PADDING, FOAM 3.0" OD X 1.50" ID	2
29	1278629GT	PADDING,FOAM, 10.0"	2
30	75617-2075GT	PADDING,FOAM 3.5"OD X 1.50"ID	2

820.2 Aircraft Protection Package with Swing Gate

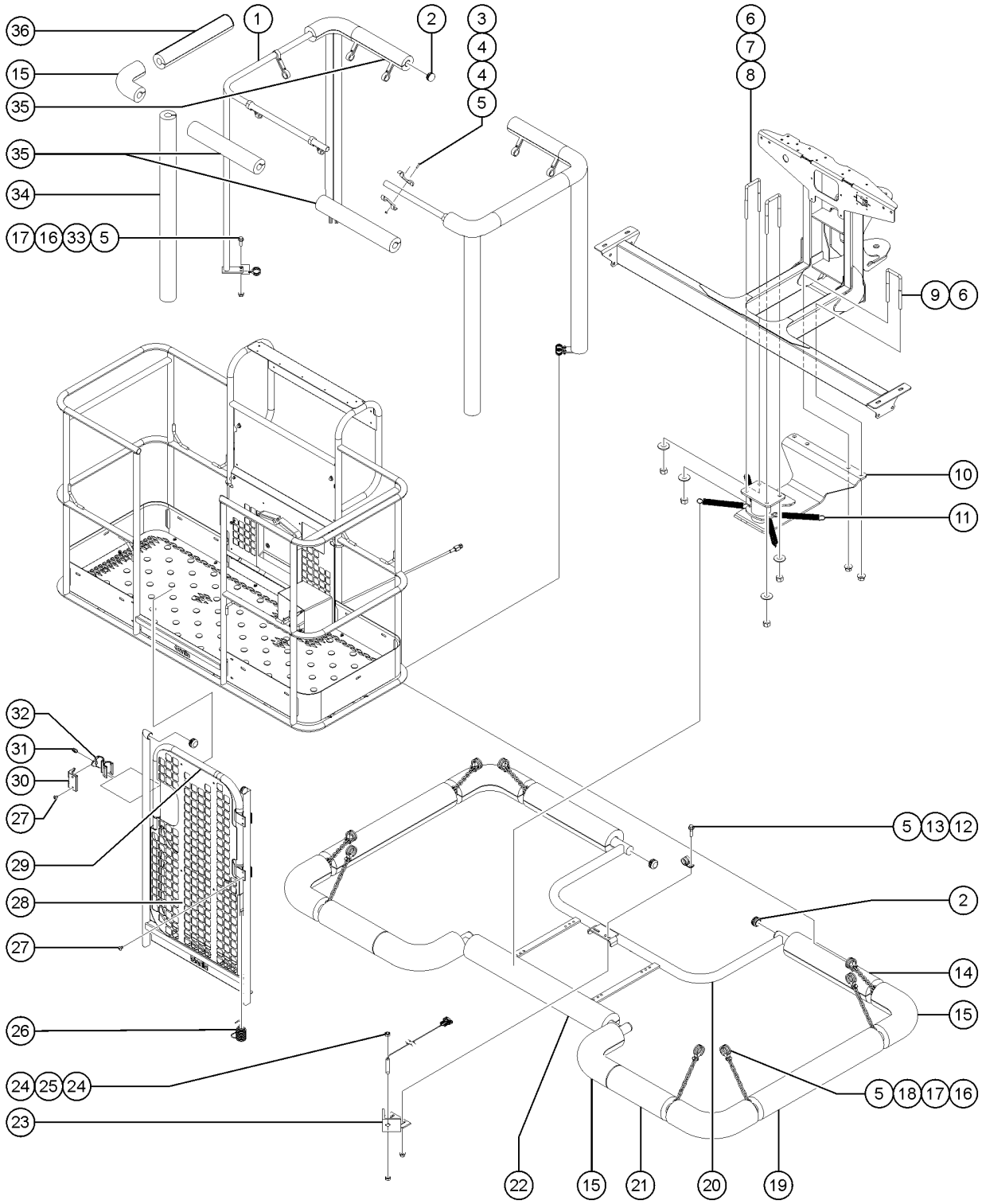

820.2 Aircraft Protection Package with Swing Gate

Item	Part No.	Description	Qty.
A	128203GT	SWITCH TOGGLE ASSY SPDT 2P MOM (not shown)	1
1	822771GT	WDMT,FRAME,AIRCRAFT PROTECTION (Include item 33)	2
2	55753GT	BUMPER, PLASTIC, 1.25 O.D.	10
3	824079GT	SCREW,HHF,1/4-20X1,8,ZAG	20
4	122073GT	SUPPORT, RAILING	20
5	1277924GT	NUT,NYLOCK FLG,1/4-20,F,ZAG	46
6	66472GT	U-BOLT, SQR, 3/8-16X2X5, PLTD	4
7	1255758GT	WASHER,FLAT,3/8,USS,ZAG	4
8	824038GT	NUT, TL JAM, 3/8-16, A, ZAG	4
9	824029GT	NUT, TL FLG, 3/8-16, G, ZAG	4
10	1274645GT	WELDMENT,SKID PLATE,AIRCRAFT PROT.	1
11	822769GT	SPRING,EXTENSION,1.92LB/IN	4
12	824079GT	SCREW,HHF,1/4-20X1,8,ZAG	2
13	6833GT	CLAMP,0.50,#8 X 1/4,RUB CUSH	1
14	75617-1550GT	PADDING,FOAM 3.5"OD X 1.50"ID	2
15	75636GT	PADDING,FOAM,3.0"X1.50ID 90DEG	10
16	21618GT	CLAMP,1.13,#18 X 1/4,RUB CUSH	24
17	824078GT	SCREW,HHF,1/4-20X.75,8,ZAG	24
18	56426-700GT	CHAIN,NO.2 (11 LINKS)	8
19	75617-2275GT	PADDING,FOAM 3.5"OD X 1.50"ID	2
20	822759GT	WDMT,AIRCRAFT SENSOR BUMPER	1
21	75617-1025GT	PADDING,FOAM 3.5"OD X 1.50"ID	2
22	822768GT	FOAM,AIRCRAFT PROTECTION	1
23	77797GT	WELDMENT, SENSOR MOUNT	1
24	88390GT	NUT,HEX,M8,PLASTIC	2
25	1269721GT	HARNESS, PROX SENSOR,ACP (includes 27391 proximity sensor)	1
25-	1269734GT	HARNESS, PROX, MANIFOLD, PLAT	
25-	27391GT	PROXIMITY SENSOR***	

820.2 Aircraft Protection Package with Swing Gate

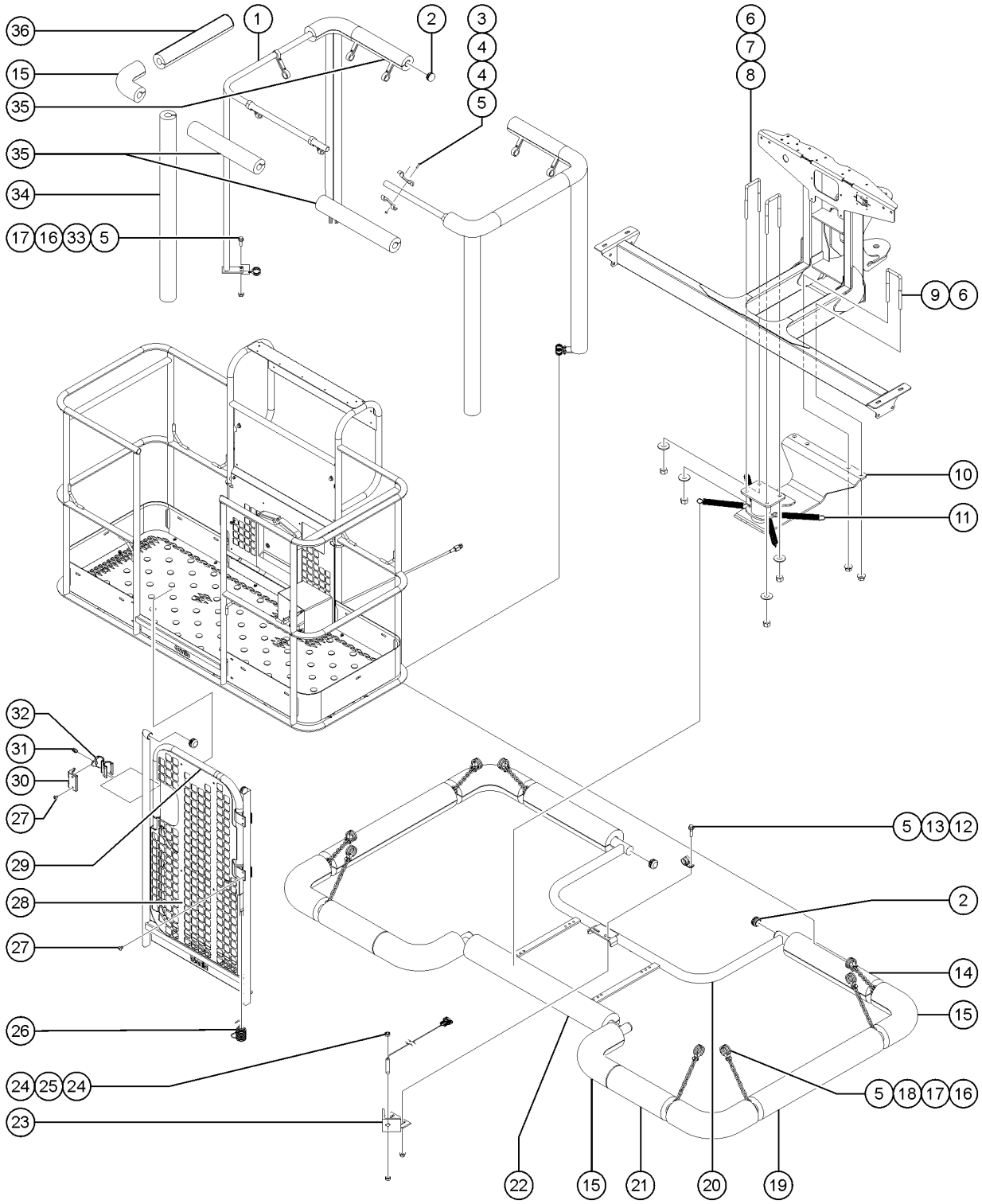

Item	Part No.	Description	Qty.
25-	29261GT	MAGNET,NEODYMIUM,.375 X .100	
26	42104GT	SPRING,SHORT PLATFORM GATE	1
27	824207GT	RIVET, STL, STL, DOME, 1/4 X .375, ZAG	14
28	1278793GT	WELDMENT,PLATFORM MESH GATE	1
29	1283880GT	WELDMENT,ALUM HALF GATE	1
29-	56424GT	CLAMP,1.25X.5 RUBBER-CUSHION	
29-	43392GT	BUMPER,BATTERY BOX & RAILS	
30	1488GT	RAILING CATCH CASTING--DRILLED	1
31	33674GT	PIN,LOCK,SHORT***	1
32	1487GT	GATE LATCH CASTING--DRILLED	1
33	81802GT	PLATE, AIRCRAFT PROTECTION OPT	4
34	1259329GT	PADDING, FOAM, 46.5"	4
35	1278629GT	PADDING,FOAM, 10.0"	4
36	75617-2075GT	PADDING,FOAM 3.5"OD X 1.50"ID	2

821.1 Operator Protection Structure

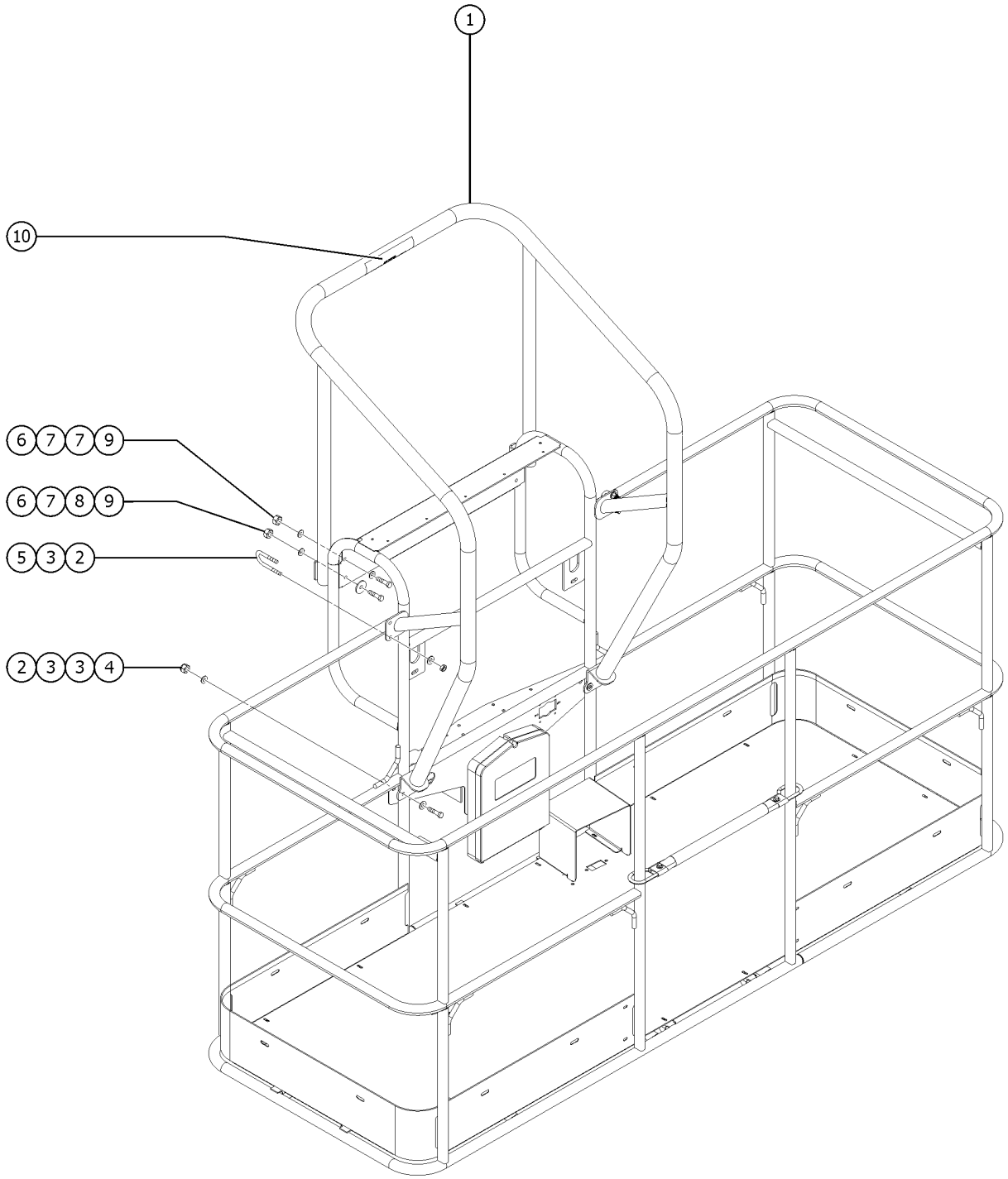

Item	Part No.	Description	Qty.
A		Fits all 6' and 8' Platforms	
1	219158GT	ACCESSORY,OPERATOR PROT STRUCT (Complete) includes all fasteners	1
2	1256468GT	NUT,3/8-16,8,ZAG	8
3	1255758GT	WASHER,FLAT,3/8,USS,ZAG	12
4	824069GT	SCREW, HHC, 3/8-16 X 2.5, 8, ZAG	4
5	1251600GT	U-BOLT, FLATTENED, 1.5DIA. X 3/8 UNC,ZAG	4
6	1261184GT	NUT,1/4-20,8,ZAG	4
7	824113GT	WASHER,FLAT,USS,1/4,ZAG	6
8	824120GT	WASHER, FLAT, .375 X 1.50 X .125, ZAG in use only with the platform control box cover option	2
9	824060GT	SCREW, HHC, 1/4-20 X 1, 8, ZAG	4
10		REF. DECAL, INSTRUCTION, OPS refer to Section 100	1

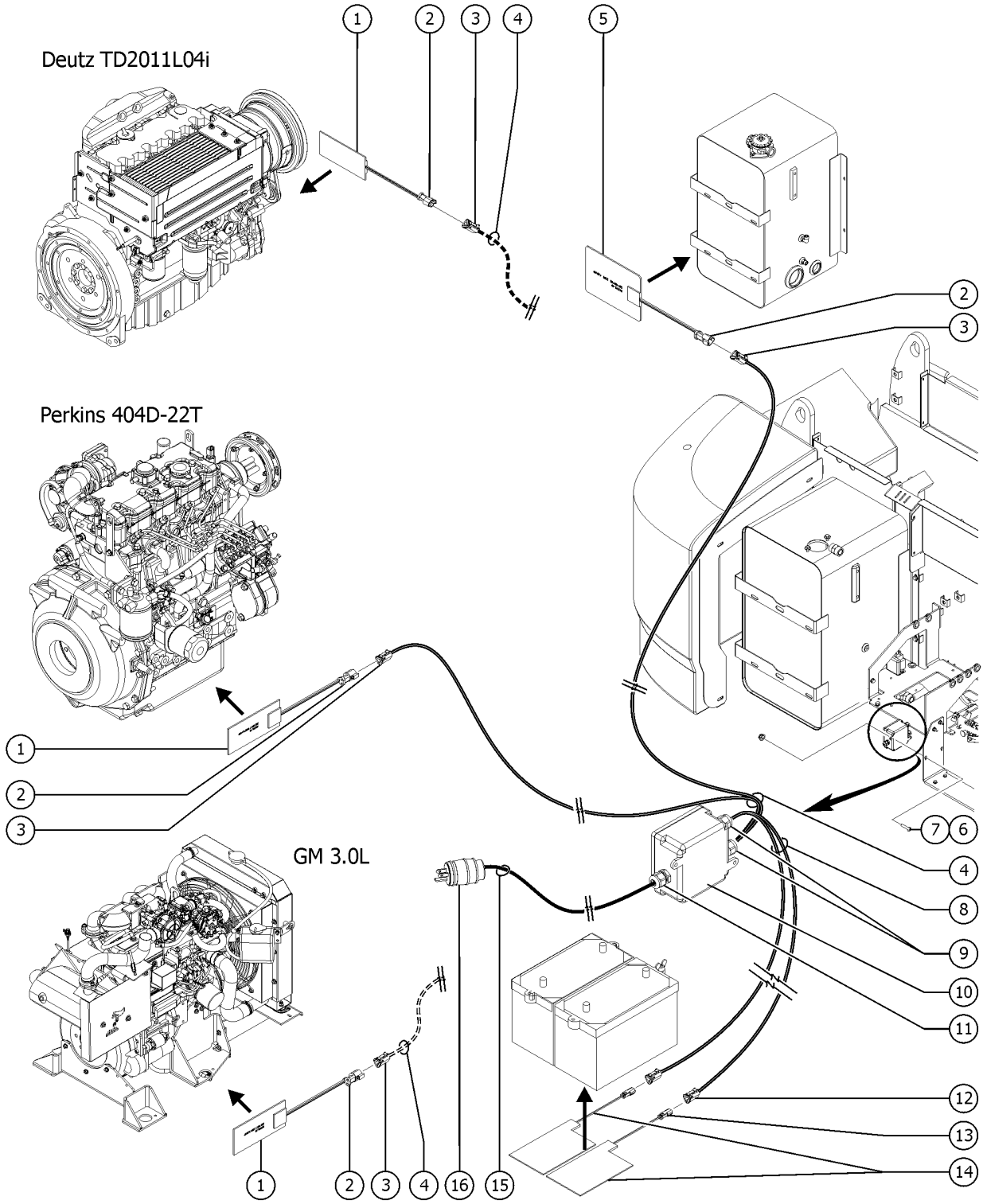
Deutz TD2011L04i
Perkins 404D-22T
GM 3.0L
1
2
3
4
5
6
7
8
9
10
11
12
13
14
15
16

Item	Part No.	Description	Qty.
1	216615GT	ASSY HEATER, MODEL 18, 120V (120V)	1
1B	216616GT	ASSY HEATER,MODEL 18,240V (240V)	1
1C	1259661GT	ASSY,ENGINE HEATER,120V (120V) Only Deutz TD 2.9L4 models, includes two adhesive pads	1
1D	1259708GT	ASSY,ENGINE HEATER,240V (240V) Only Deutz TD 2.9L4 models, includes two adhesive	1
2	119066GT	CONN, RECEP, 3 WAY, DEUTSCH, DT, ENDCAP (Part of heater assembly)	2
3	119057GT	CONN, PLUG, 3 WAY, DEUTSCH, DT, ENDCAP (Part of wire harness)	2
4	216662GT	HARNESS,ENG/HYD HEATER,120V (120V)	1
4B	216683GT	HARNESS,ENG/HYD HEATER,240V (240V)	1
5	216612GT	ASSY,120V HEATER, HYD TANK (120V)	1
5B	216611GT	ASSY,240V HEATER, HYD TANK (240V)	1
6	826516GT	SCREW, PHPM, 10-32 X 1.0, ZAG	2
7	824032GT	NUT, TL FLG, 10-32, F, ZAG	2
8	216659GT	HARNESS, 120V BATT CABLE, 36" (120V)	1
8B	216680GT	HARNESS, 240V BATT CABLE, 36" (240V)	1
9	99778GT	CABLE SQUEEZE CONN,4 WIRE (Part of of wire harness)	2
9-	238123GT	HUBBLE NUT, PG11	
10	214249GT	COLD WEATHER 120V J BOX ASSY (120V)	1
10B	237711GT	COLD WEATHER 240V J BOX ASSY (240V)	1
11	214536GT	SQUEEZE CONN W/NUT, 2WIRE, 4MM (Part of of wire harness)	1
12	119056GT	CONN, PLUG, 2 WAY, DEUTSCH, DT, ENDCAP	2
13	119065GT	CONN, RECEP, 2 WAY, DEUTSCH, DT	2
14	216617GT	ASSY, BATTERY HEATER, 120V (120V)	2
14B	216618GT	ASSY BATTERY HEATER,240V (240V)	2
15	216645GT	HARNESS, 120V POWER CORD, 12" (120V) includes items 11 and 16	1
15B	216646GT	HARNESS, 240V POWER CORD, 12" (240V) includes item 11 only	1
16	119403GT	CONN,PLUG 120 AC/15A DOMESTIC (Part of wire harness)	1

823.1 Fall Arrest Bar

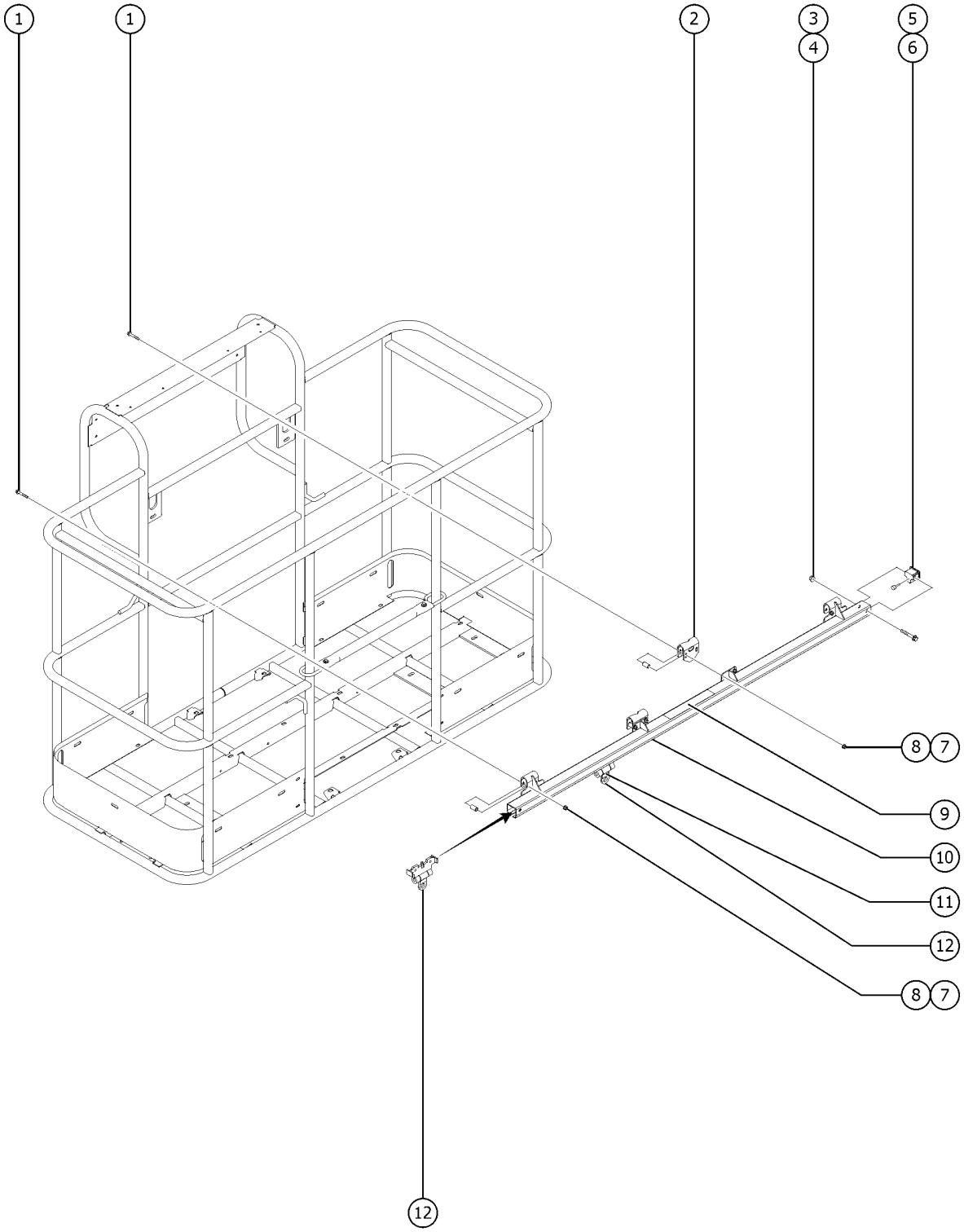

Item	Part No.	Description	Qty.
1	1256856GT	SCREW,HHF,3/8-16X2.5,8,ZAG	8
2	1256389GT	FORMING,INNER HANGER	2
3	1251997GT	NUT,TL FLG,1/2-13,G,ZAG	2
4	1256851GT	SCREW,HHF,1/2-13X3.5,8,ZAG	2
5	1260892GT	END STOP. TFAAS TRACK	2
6	36388GT	BUMPER,RUBBER,.75 X .50H,STUD	2
7	1274322GT	NUT,NYLOCK FLG,3/8-16,F,ZAG	8
8	1256481GT	SPACER, HANGER BRACKET	8
9	1256400GT	DECAL,TFAAS TRACK,WORD	1
9B	1260910GT	DECAL,TFAAS TRACK,SYMBOL	1
9C	1256400FRGT	DECAL,TFAAS TRACK,WORD FR	1
10	1256377GT	ACC,TFAAS FALL ARREST,8FT WORD includes instructions and decals	1
10A-	1256379GT	ASSY,TFAAS TRACK,8FT WORD includes decals	
10B	1261022GT	ACC,TFAAS FALL ARREST,8FT SYM includes instructions and decals	1
10B-	1261024GT	ASSY,TFAAS TRACK,8FT SYM includes decals	
10C	1261018GT	ACC,TFAAS FALL ARREST,8FT FR includes instructions and decals	1
10C-	1261020GT	ASSY,TFAAS TRACK,8FT FR includes decals	
10D	1256378GT	ACC,TFAAS FALL ARREST,6FT WORD includes instructions and decals	1
10D-	1256380GT	ASSY,TFAAS TRACK,6FT WORD includes decals	
10E	1261023GT	ACC,TFAAS FALL ARREST,6FT SYM includes instructions and decals	1
10E-	1261025GT	ASSY,TFAAS TRACK,6FT SYM includes decals	
10F	1261019GT	ACC,TFAAS FALL ARREST,6FT FR includes instructions and decals	1
10F-	1261021GT	ASSY,TFAAS TRACK,6FT FR includes decals	
11	40434GT	DECAL,LANYARD ANCHORAGE POINT	1
12	1256439GT	TROLLEY, TFAAS TRACK	1

824.1 Lift Guard Contact Alarm Option

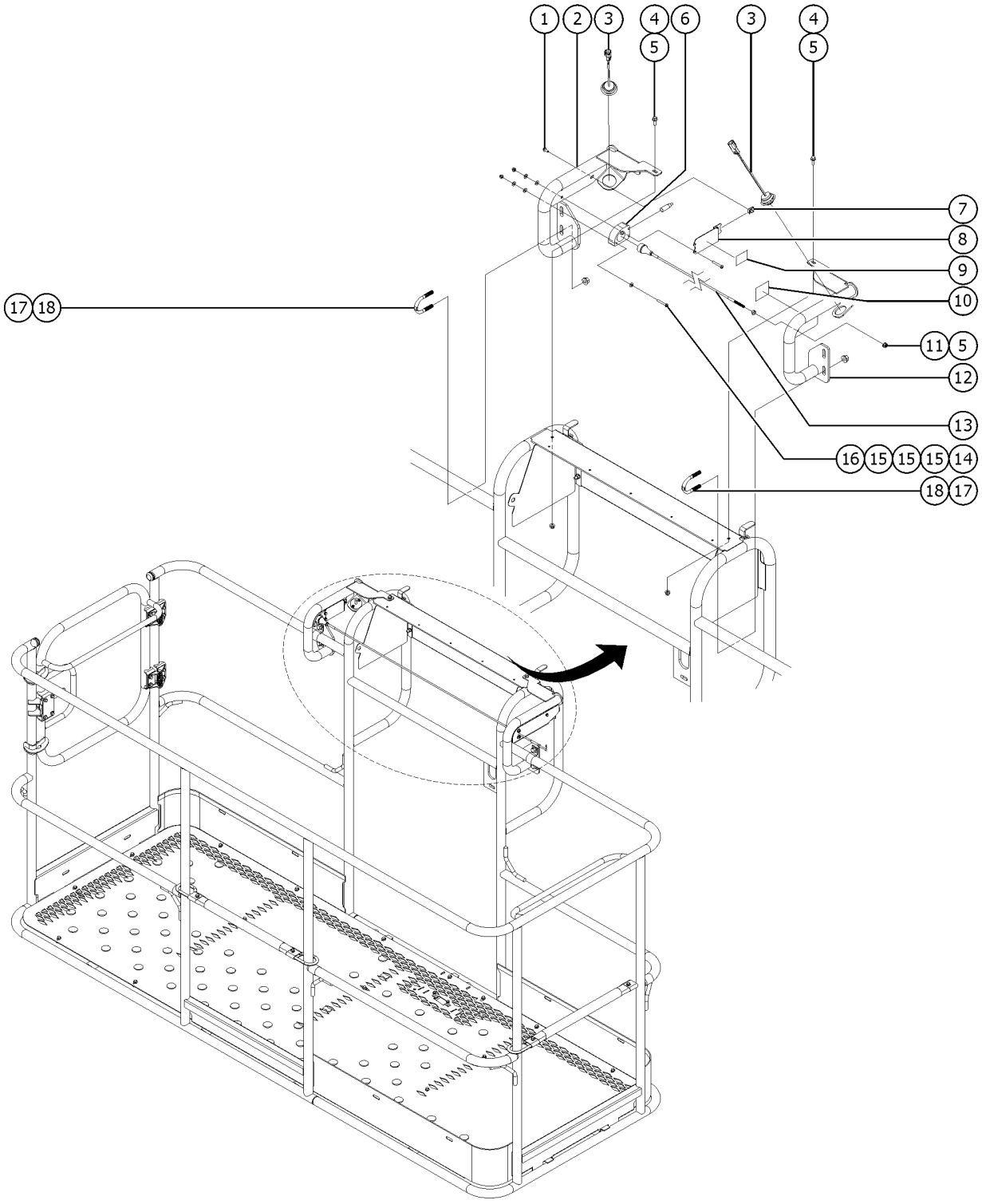

824.1 Lift Guard Contact Alarm Option

Item	Part No.	Description	Qty.
1	1264934GT	SCREW,HHF,10-24X.5	1
2	1310064GT	WELDMENT, LEFT CONTACT ALARM, LARGE	1
3	1308384GT	ASSY, LIGHTS, 12/24 V CONTACT ALARM, AMBER	2
4	824078GT	SCREW,HHF,1/4-20X.75,8,ZAG	2
5	1277924GT	NUT,NYLOCK FLG,1/4-20,F,ZAG	3
6	1307644GT	ASSY, SENSOR W/ HOUSING (Includes holder item 1306899 and sensor part 1278119)	1
6-	1306899GT	HOLDER, SENSOR	
6-	1278119GT	ASSEMBLY, SENSOR, PROX, CONTACT ALARM	
7	73575GT	SPRING CLIP,10-24,.025-.125X.468,ZAG	1
8	1277873GT	FORMING, SENSOR HOLDER	1
9	1278542GT	DECAL, INSTRUCTION, CONTACT ALARM	1
10	1278982GT	DECAL, INSTRUCTION, ACTUATOR SWITCH SOCKET	1
11	1261184GT	NUT,1/4-20,8,ZAG	1
12	1310066GT	WELDMENT, RIGHT CONTACT ALARM, LARGE	1
13	1306900GT	CONTACT ALARM WIRE ASSY, LARGE	1
13-	1278124GT	MAGNET, 1/4-20, 15 LB.	
13-	1307645GT	CONTACT ALARM WIRE ASSY, LARGE	
13-	1278368GT	GRIP, CABLE	
13-	1261184GT	NUT,1/4-20,8,ZAG	
14	1280278GT	SCREW,PHPM,10-24X1.375,ZAG	3
15	1253185GT	WASHER,FLAT,#10,USS,ZAG	5
16	1307739GT	Nut,#10-24 Nickel Plated Acorn	3
17	1251600GT	U-BOLT, FLATTENED, 1.5DIA. X 3/8 UNC,ZAG	2
18	1274322GT	NUT,NYLOCK FLG,3/8-16,F,ZAG	4

825.1 Remote Charging Option

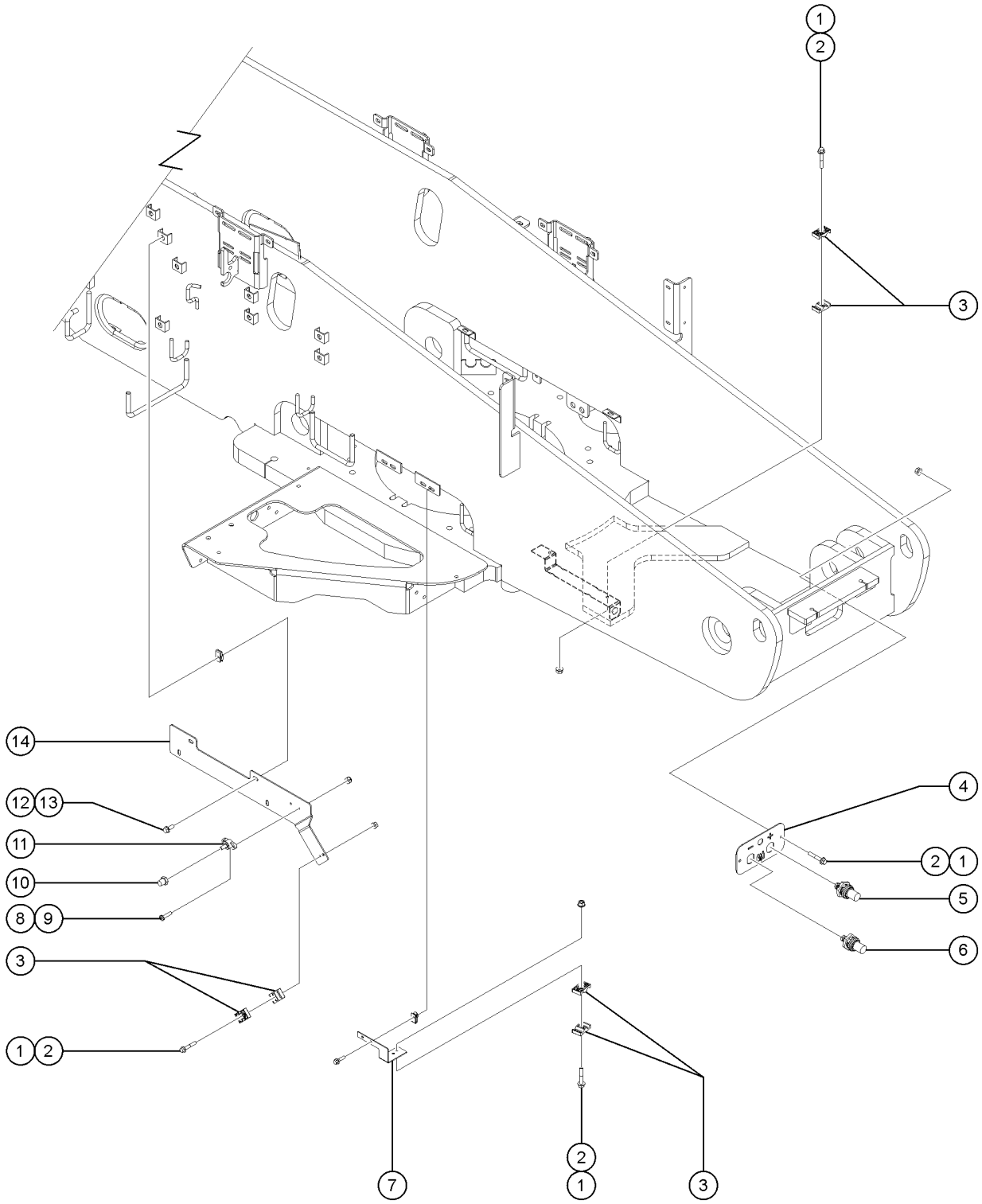

Item	Part No.	Description	Qty.
1	824081GT	SCREW, HHF, 1/4-20 X 1.5, 8, ZAG	6
2	824027GT	NUT, TL FLG, 1/4-20, G, ZAG	6
3	78736GT	CLAMP,2 HOSE,PLASTIC	8
4	1271929GT	PLATE, MOUNTING, ACCESSORY	1
5	1270310GT	JUMPER TRMNL, BLACK, 3/8" POST	1
6	1270309GT	JUMPER TRMNL, RED, 3/8" POST	1
7	1271375GT	FORMING, CLAMP, CABLE	1
8	49816GT	SCREW,PHILLIPS,PHM,10-32 X .75	2
9	6178GT	NUT, NYLOCK, 10-32	2
10	1270131GT	TERMINAL, 3/8-16 STUD TO POST	1
11	94981GT	STUD,POWER 3/8" RED	1
12	121066GT	SCREW,HHC,FLG,3/8-16 X 1 GR8	4
13	29868GT	SPRING CLIP,3/8-16,.05-.20X.73,ZAG	4
14	1270130GT	FORMING, STUD MOUNT, CABLE SUPPORT	1

826.1 Tech Pro Link Kit

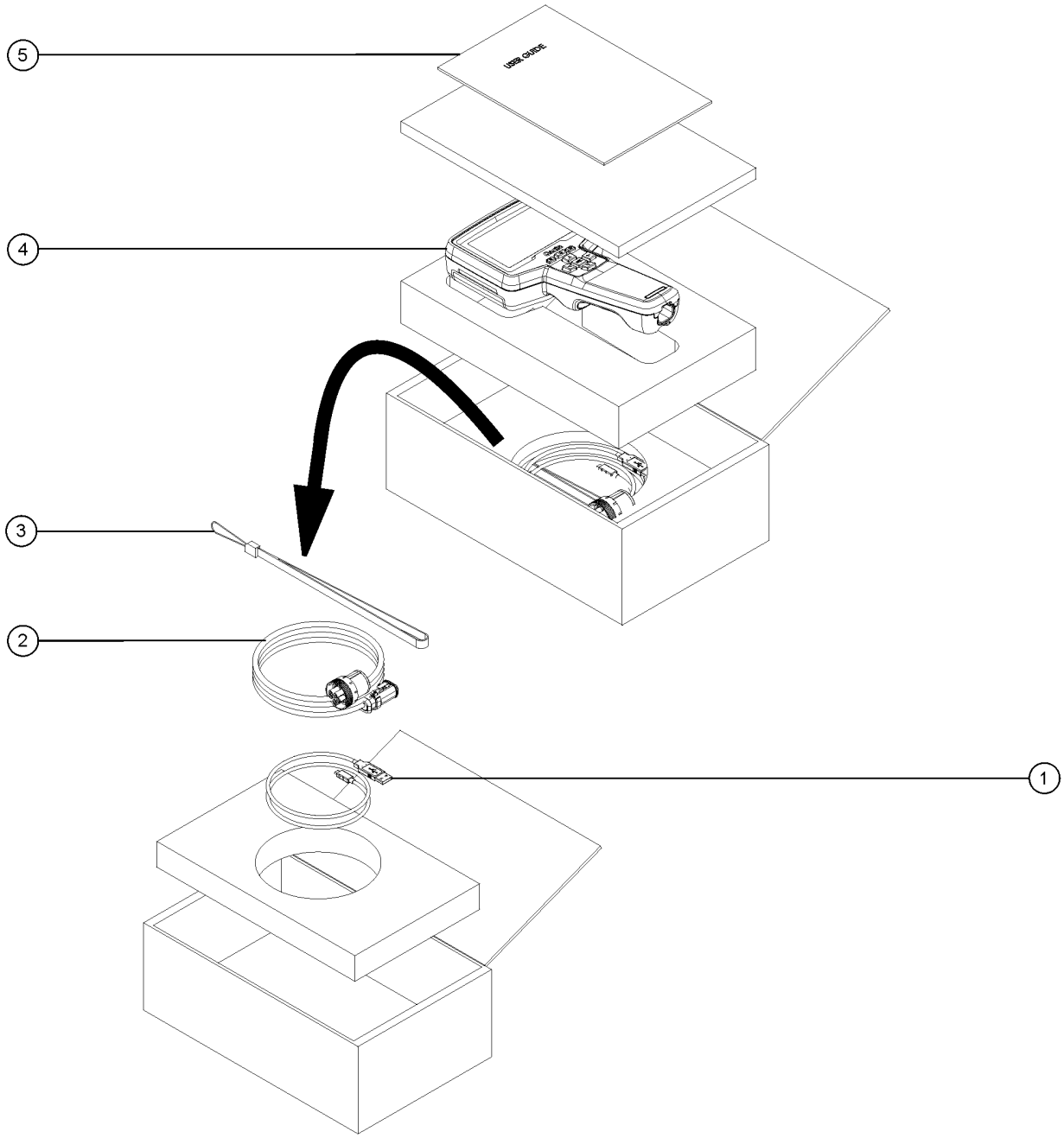

826.1 Tech Pro Link Kit

Item	*Part No.*	*Description*	*Qty.*
A	1276686GT	KIT, TECHPRO LINK	
1	1276688GT	USB CABLE, TECHPRO LINK	1
2	1275739GT	HARNESS, DATABUS, GTPL	1
3	1276687GT	LANYARD, TECHPRO LINK	1
4	1274140GT	SERVICE, HANDHELD, SOFTWARE, TOOL	1
4-	1284465GT	TECHPRO, USB FLASH DRIVE	1
5	1276689GT	USER GUIDE, TECHPRO LINK	1

827.1 Pass Option, Deutz TD2.9

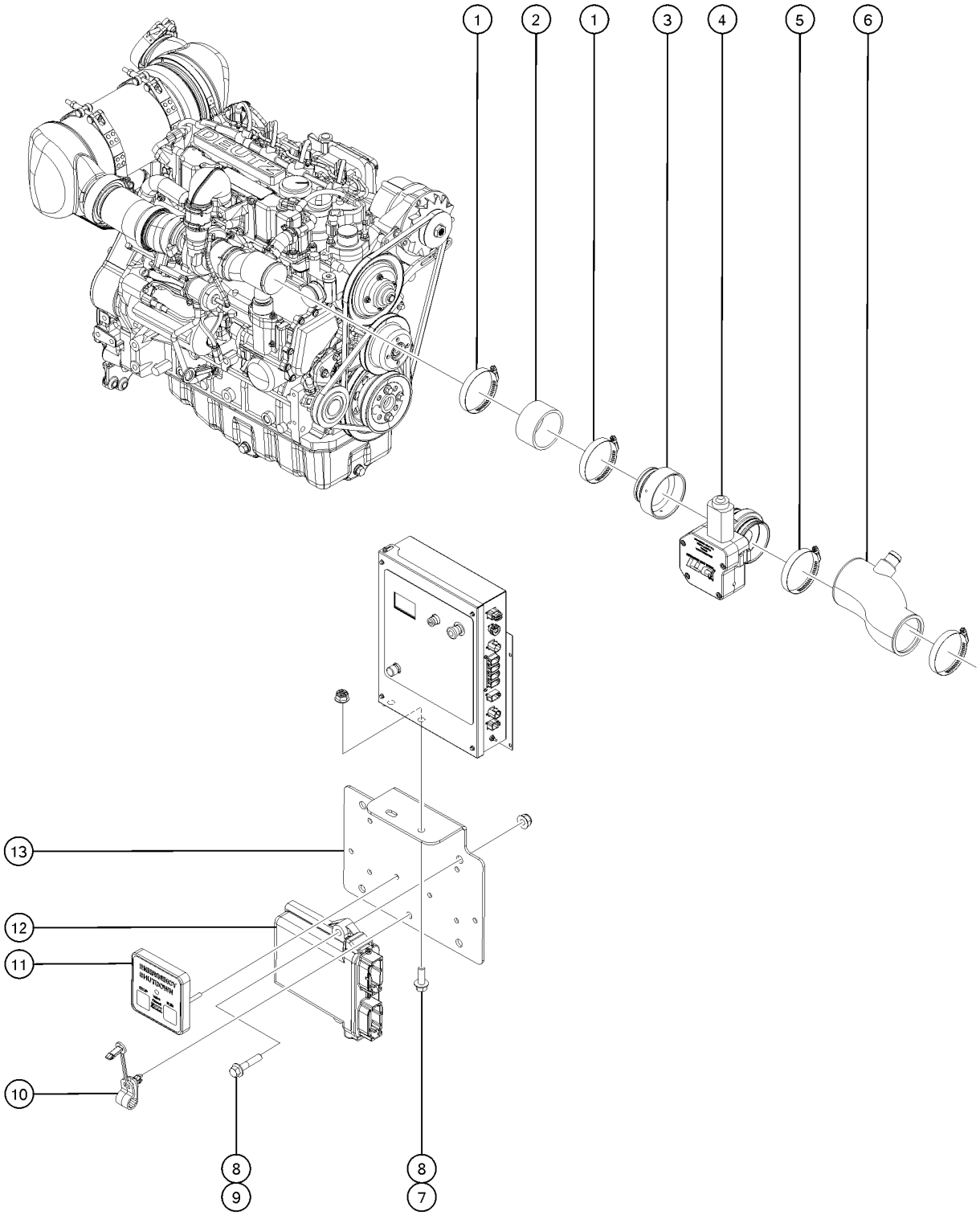

827.1 Pass Option, Deutz TD2.9

Item	Part No.	Description	Qty.
-		KIT, PASS, DEUTZ TD2.9, S80/85, Z80 Kits are no longer offered. Buy individual parts. Reach out to customer service for installation instructions.	1
-	1290849GT	HARNESS, CONTROL, PASS	1
-	6146GT	WASHER,FLAT,MS,#10,Y	1
-	1251757GT	SCREW,PHPM,10-32X.50,ZAG	1
1	45435GT	CLAMP,HOSE,2.50"	2
2	1289823GT	HOSE, INTAKE SILICONE 2.5" ID X 1.54" LG	1
3	1289837GT	NOZZLE 3" TO 2.5"	1
4	1289536GT	VALVE, PASS DEUTZ T4	1
5	30971GT	CLAMP,HOSE,3.00"	1
6	1289852GT	PASS INTAKE S80 TD2.9	1
7	824078GT	SCREW,HHF,1/4-20X.75,8,ZAG	2
8	1277924GT	NUT,NYLOCK FLG,1/4-20,F,ZAG	4
9	824080GT	SCREW, HHF, 1/4-20 X 1.25, 8, ZAG	2
10	219508GT	CLAMP, FIXED DIA, NYLON, 3/8"	1
11	1290107GT	HARNESS, MODULE, ESTOP, PASS	1
12	1291573GT	CONTROLLER, VCU, DEUTZ 2.9	1
13	1264229GT	BRACKET, POSITIVE AIR SHUTOFF	1

828.1 Telematics Option

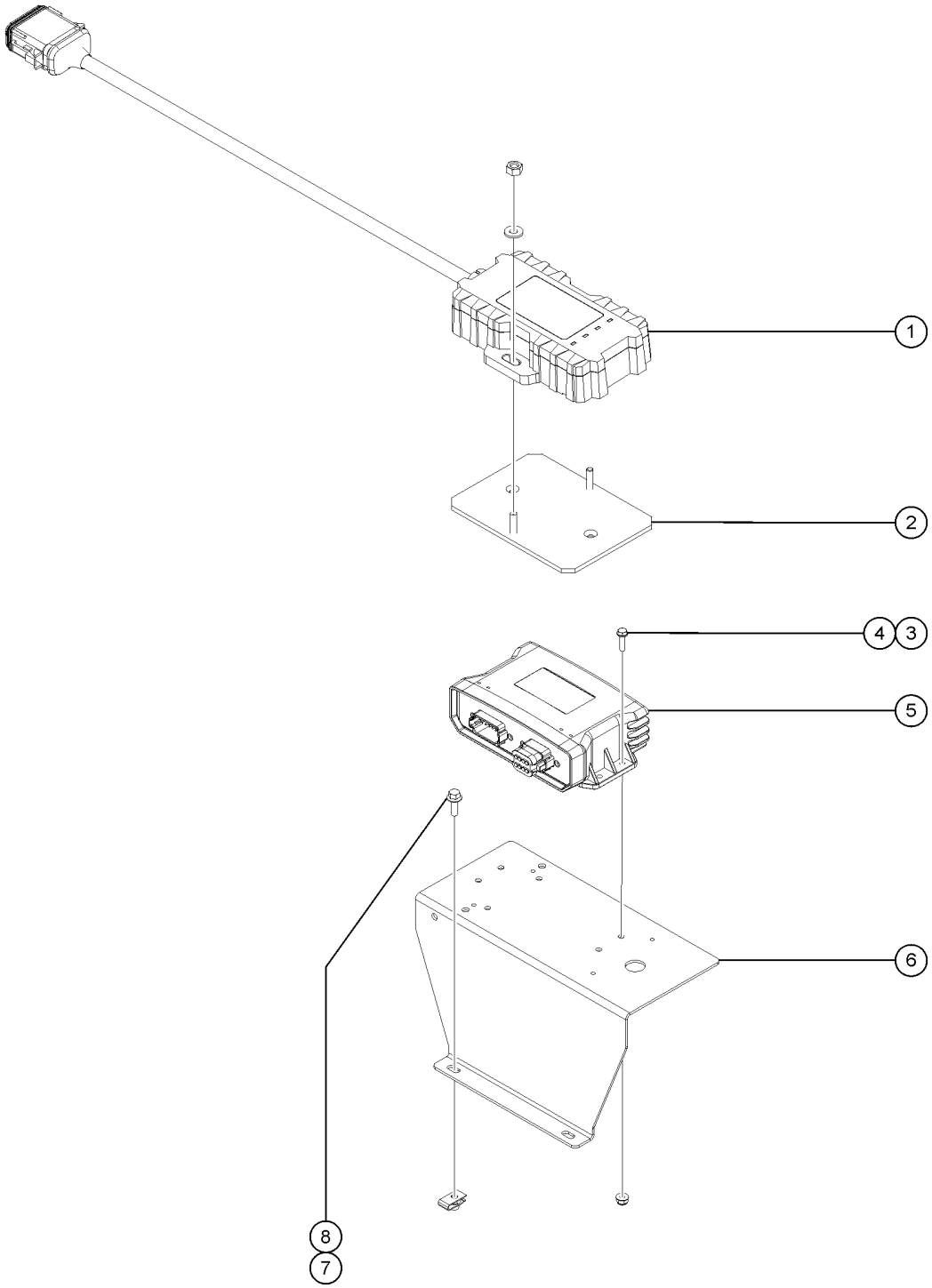

Item	Part No.	Description	Qty.
-	1292198GT	HARNESS, RETROFIT, M7 for first time insulation, must order this Harness with one of the models 1289520GT, 1289521GT, 1289522GT, or 1289523GT	1
1	1289520GT	MODULE, TELEMATICS, ZTR, M7, NORTH AMERICA North America, to SN S85XCH-4690	1
1B	1313592GT	MODULE, ASSY,TELEMATICS, ZTR, M7, GLOBAL from SN S85XCH-4691	
1C	1289521GT	MODULE, TELEMATICS, ZTR, M7, EMEA/APAC EMEA/APAC	
1D	1289522GT	MODULE, TELEMATICS, ZTR, M7, APAC/ANZ APAC/ANZ	
1E	1289523GT	MODULE,TELEMATICS,ZTR,M7,JAPAN Japan	
2	1289561GT	BRACKET, TELEMATICS	1
3	1262031GT	SCREW,HHF,10-24X.75,ZAG (from SN S85XCH-1538)	4
4	1283004GT	NUT,NYLOCK FLG,10-24,A,ZAG (from SN S85XCH-1538)	4
5	1272326GT	KIT,ZTR,M8 (from SN S85XCH-1538)	1
6	1281149GT	FORMING,TELEMATICS MOUNT (from SN S85XCH-1538)	1
7	824078GT	SCREW,HHF,1/4-20X.75,8,ZAG (from SN S85XCH-1538)	2
8	56912GT	SPRING CLIP,1/4-20,.025-.15X.54,ZAG (from SN S85XCH-1538)	2

829.1 Lift Tools Access Deck - 8 Feet

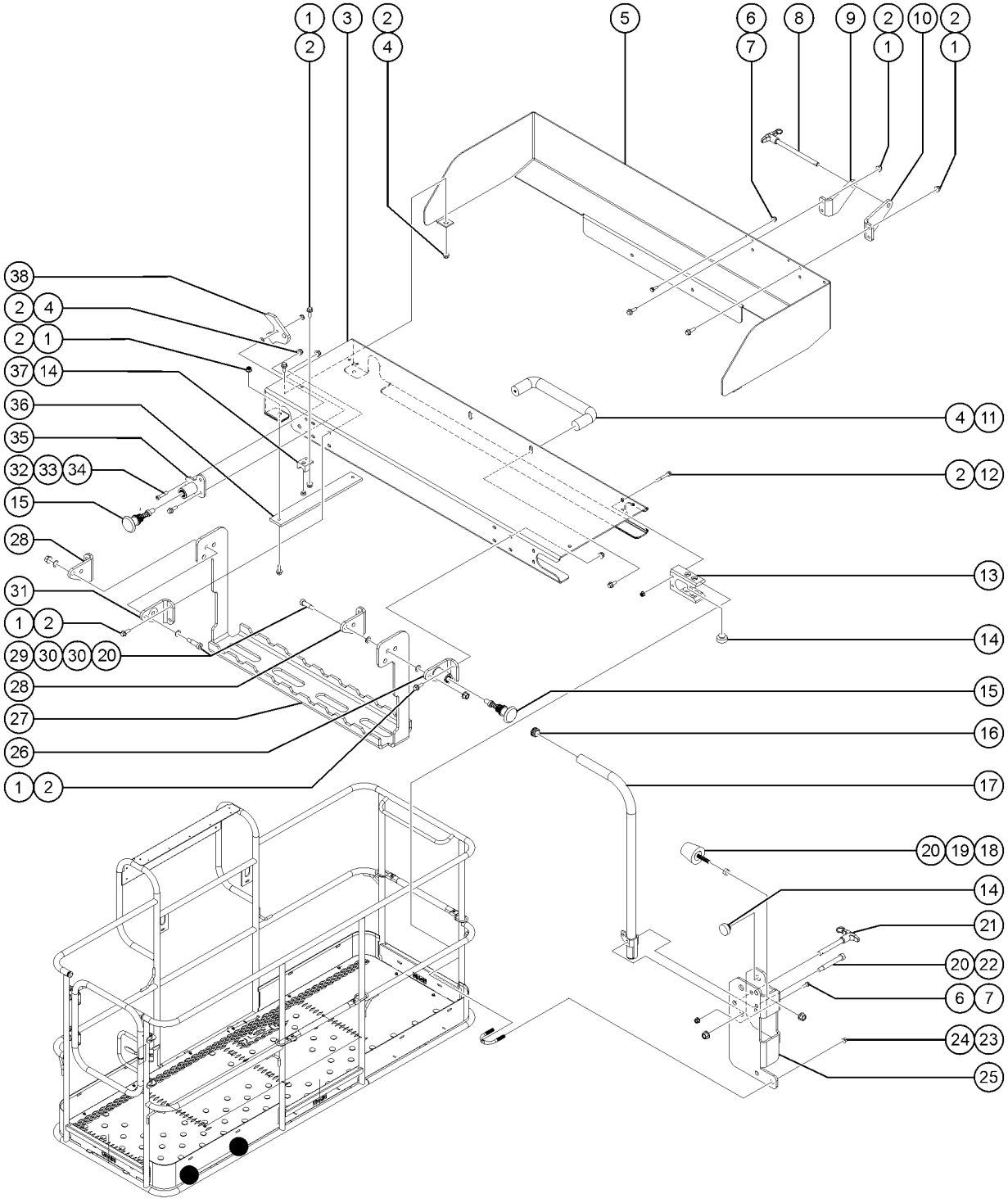

829.1 Lift Tools Access Deck - 8 Feet

Item	Part No.	Description	Qty.
-	1291798GT	KIT, LIFT TOOLS ACCESS DECK, 8FT PLATFORM, ANSI	
1	824078GT	SCREW,HHF,1/4-20X.75,8,ZAG	20
2	1277924GT	NUT,NYLOCK FLG,1/4-20,F,ZAG	28
3	1291799GT	FORMING, ACCESS DECK	1
4	1256855	SCREW,HHF,1/4-20X.625,8,ZAG	6
5	1291800GT	FORMING, ACCESS DECK TOEBOARD, 8FT PLATFORM	1
6	1283004GT	NUT,NYLOCK FLG,10-24,A,ZAG	2
7	1270665GT	SCREW,HHF,10-24X.625,5,ZAG	2
8	1292956GT	PIN, QUICK RELEASE 3/8X5	1
8-	1292932GT	LANYARD, STEEL, 8",NYLON SLEEVE,#10	
9	1292937GT	FORMING, ACCESS DECK LEFT LOCK No longer available,(Replaced by 1292937P)	1
9B	1292937PGT	FORMING,ACCESS DECK LEFT LOCK,PTD	1
10	1292936GT	FORMING, ACCESS DECK RIGHT LOCK	1
11	1291802GT	FORMED, PULL HANDLE	1
12	1253485GT	SCREW,HHF,1/4-20X2,8,ZAG	4
13	1291812GT	WEAR PAD, HORIZANTAL MIDRAIL SLOT	2
14	43392GT	BUMPER,BATTERY BOX & RAILS	8
15	1291811GT	POP PIN, YELLOW	2
16	55753GT	BUMPER, PLASTIC, 1.25 O.D.	2
17	1291815GT	WELDMENT, FOLDING HANDLE	1
18	111580GT	BUMPER,RUBBER,1.19DX1.5X.31-18	1
19	1261250GT	NUT,5/16-18,8,ZAG	1
20	1274167GT	NUT,NYLOCK FLG,5/16-18,F,ZAG	4
21	1291865GT	PIN, QUICK RELEASE 3/8X2-1/2	1
21-	1292932GT	LANYARD, STEEL, 8",NYLON SLEEVE,#10	
22	1291817GT	BOLT,SHS,3/8X2.25X5/16-18,ZAG	1
23	1274322GT	NUT,NYLOCK FLG,3/8-16,F,ZAG	4
24	1251600GT	U-BOLT, FLATTENED, 1.5DIA. X 3/8 UNC,ZAG	2

829.1 Lift Tools Access Deck - 8 Feet

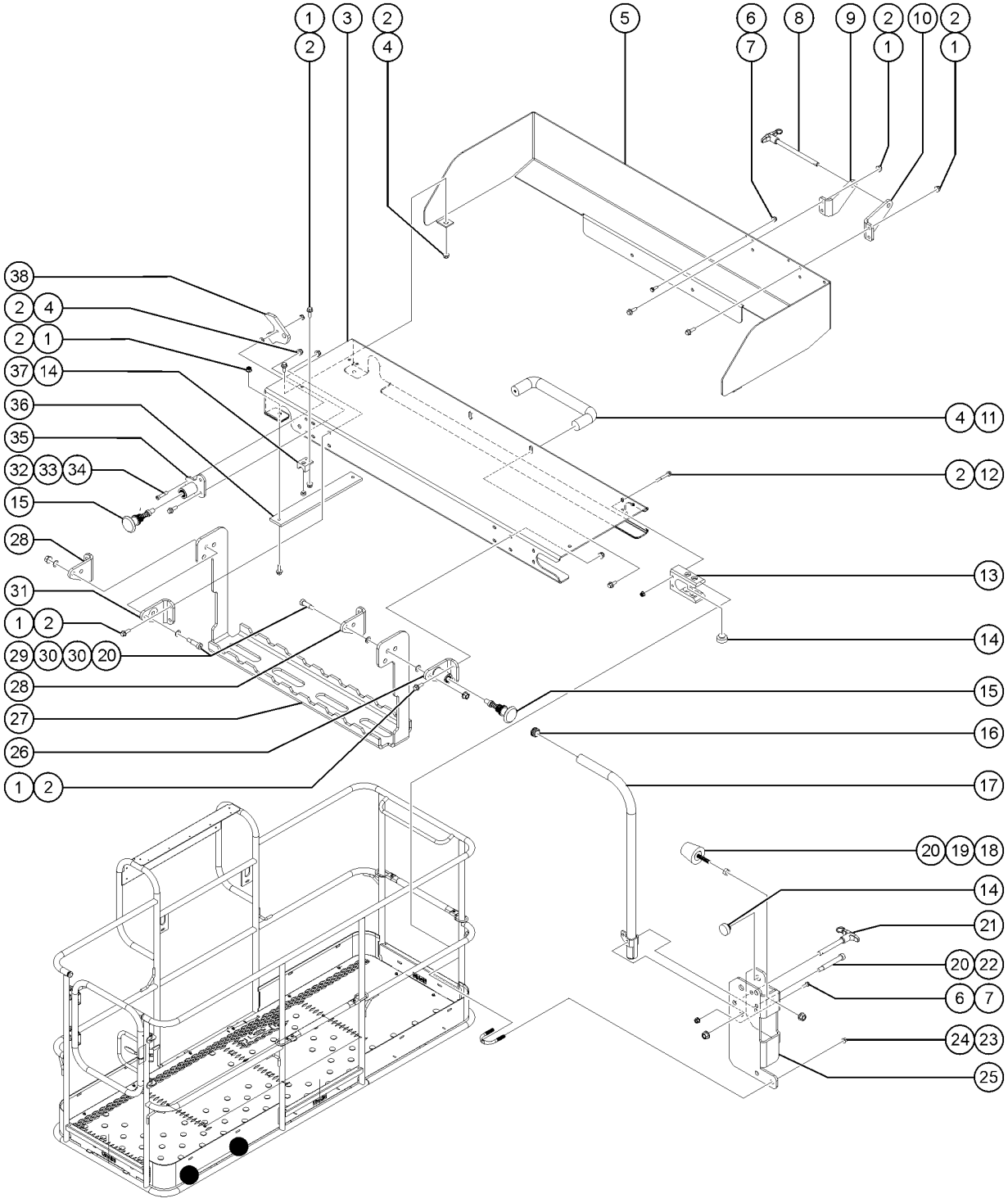

Item	Part No.	Description	Qty.
25	1293706GT	FORMING, ACCESS DECK HANDLE	1
26	1291844GT	WELDMENT, ACCESS DECK STEP LOCK	1
27	1291801GT	FORMING, ACCESS DECK STEP, 8FT PLATFORM	1
28	1291804GT	FORMING, ACCESS DECK LEFT EYE, 8FT PLATFORM	2
29	1291819GT	BOLT,SHS,3/8X7/8X5/16-18,ZAG	2
30	1292828GT	WASHER,FLAT,.39,.625,.036,ZAG	4
31	1291803GT	FORMING, ACCESS DECK RIGHT EYE, 8FT PLATFORM	1
32	1291818GT	BOLT,SHS,1/4X.75X1/4-20,ZAG	1
33	1291821GT	WASHER, FLAT, 1/4X1/16X1/2, AL	1
34	1283026GT	NUT,LP NYLOCK,1/4-20,2,ZAG	1
35	1291809GT	WELDMENT, LIFT TOOLS MIDRAIL LOCK	1
36	1291807GT	PLATE, STIFFENER BAR	2
37	1291813GT	WEAR PAD, VERTICAL MIDRAIL SLOT	2
38	1291806GT	PLATE, MIDRAIL HOOK	1

830.1 Lift Tools Access Deck - 6 Feet

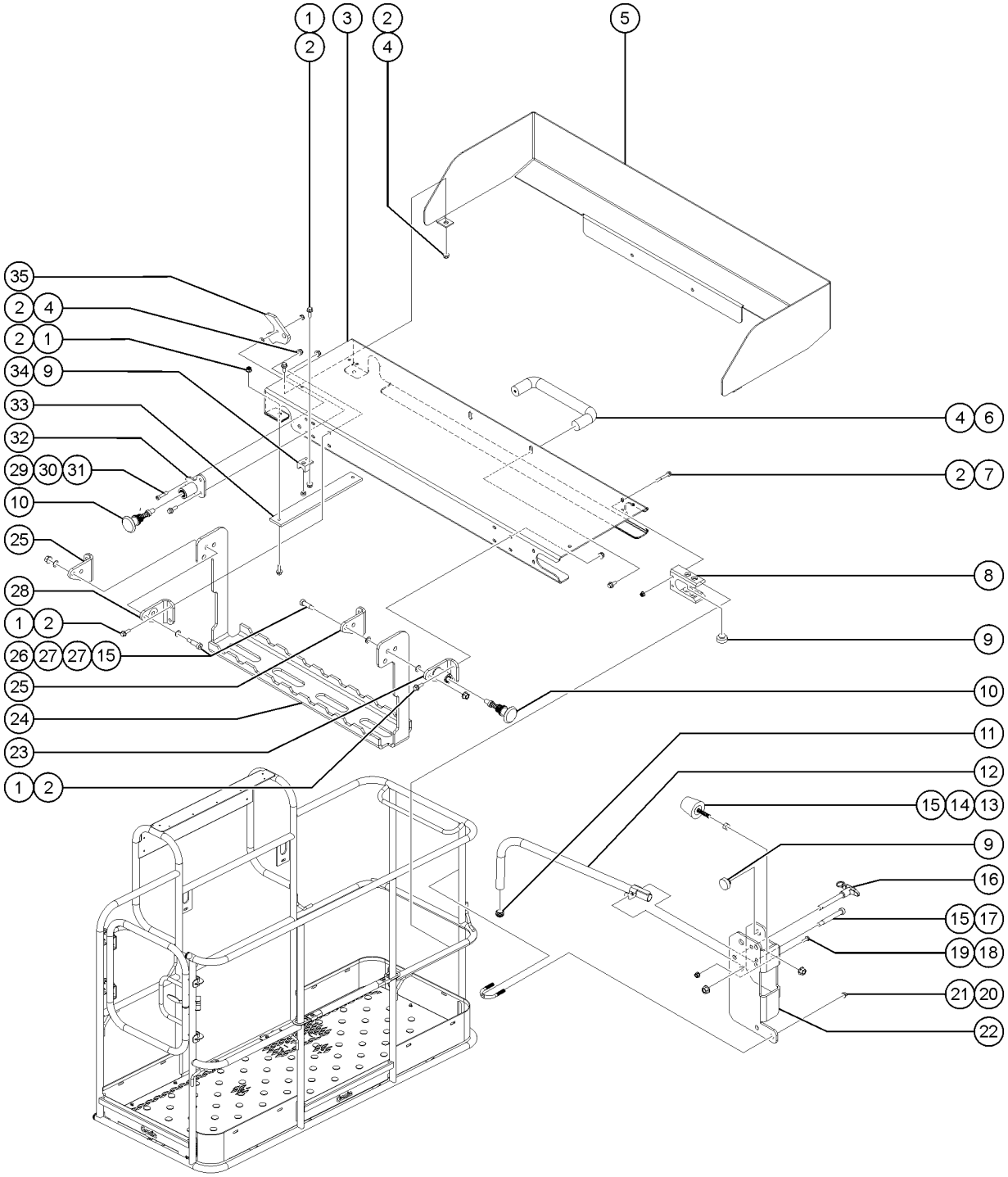

830.1 Lift Tools Access Deck - 6 Feet

Item	Part No.	Description	Qty.
-	1293700GT	KIT, LIFT TOOLS ACCESS DECK, 6FT PLATFORM, ANSI (6 feet)	1
1	824078GT	SCREW,HHF,1/4-20X.75,8,ZAG	16
2	1277924GT	NUT,NYLOCK FLG,1/4-20,F,ZAG	24
3	1293710GT	FORMING, ACCESS DECK	1
4	1256855GT	SCREW,HHF,1/4-20X.625,8,ZAG	6
5	1293702GT	FORMING, ACCESS DECK TOEBOARD, 6FT PLATFORM	1
6	1291802GT	FORMED, PULL HANDLE	1
7	1253485GT	SCREW,HHF,1/4-20X2,8,ZAG	4
8	1291812GT	WEAR PAD, HORIZANTAL MIDRAIL SLOT	2
9	43392GT	BUMPER,BATTERY BOX & RAILS	8
10	1291811GT	POP PIN, YELLOW	2
11	55753GT	BUMPER, PLASTIC, 1.25 O.D.	2
12	1291815GT	WELDMENT, FOLDING HANDLE	1
13	111580GT	BUMPER,RUBBER,1.19DX1.5X.31-18	1
14	1261250GT	NUT,5/16-18,8,ZAG	1
15	1274167GT	NUT,NYLOCK FLG,5/16-18,F,ZAG	4
16	1291865GT	PIN, QUICK RELEASE 3/8X2-1/2	1
16-	1292932GT	LANYARD, STEEL, 8",NYLON SLEEVE,#10	
17	1291817GT	BOLT,SHS,3/8X2.25X5/16-18,ZAG	1
18	1270665GT	SCREW,HHF,10-24X.625,5,ZAG	1
19	1283004GT	NUT,NYLOCK FLG,10-24,A,ZAG	1
20	1274322GT	NUT,NYLOCK FLG,3/8-16,F,ZAG	4
21	1251600GT	U-BOLT, FLATTENED, 1.5DIA. X 3/8 UNC,ZAG	2
22	1293706GT	FORMING, ACCESS DECK HANDLE	1
23	1291844GT	WELDMENT, ACCESS DECK STEP LOCK	1
24	1293703GT	FORMING, ACCESS DECK STEP, 6FT PLATFORM	1
25	1291804GT	FORMING, ACCESS DECK LEFT EYE, 8FT PLATFORM	2
26	1291819GT	BOLT,SHS,3/8X7/8X5/16-18,ZAG	2

830.1 Lift Tools Access Deck - 6 Feet

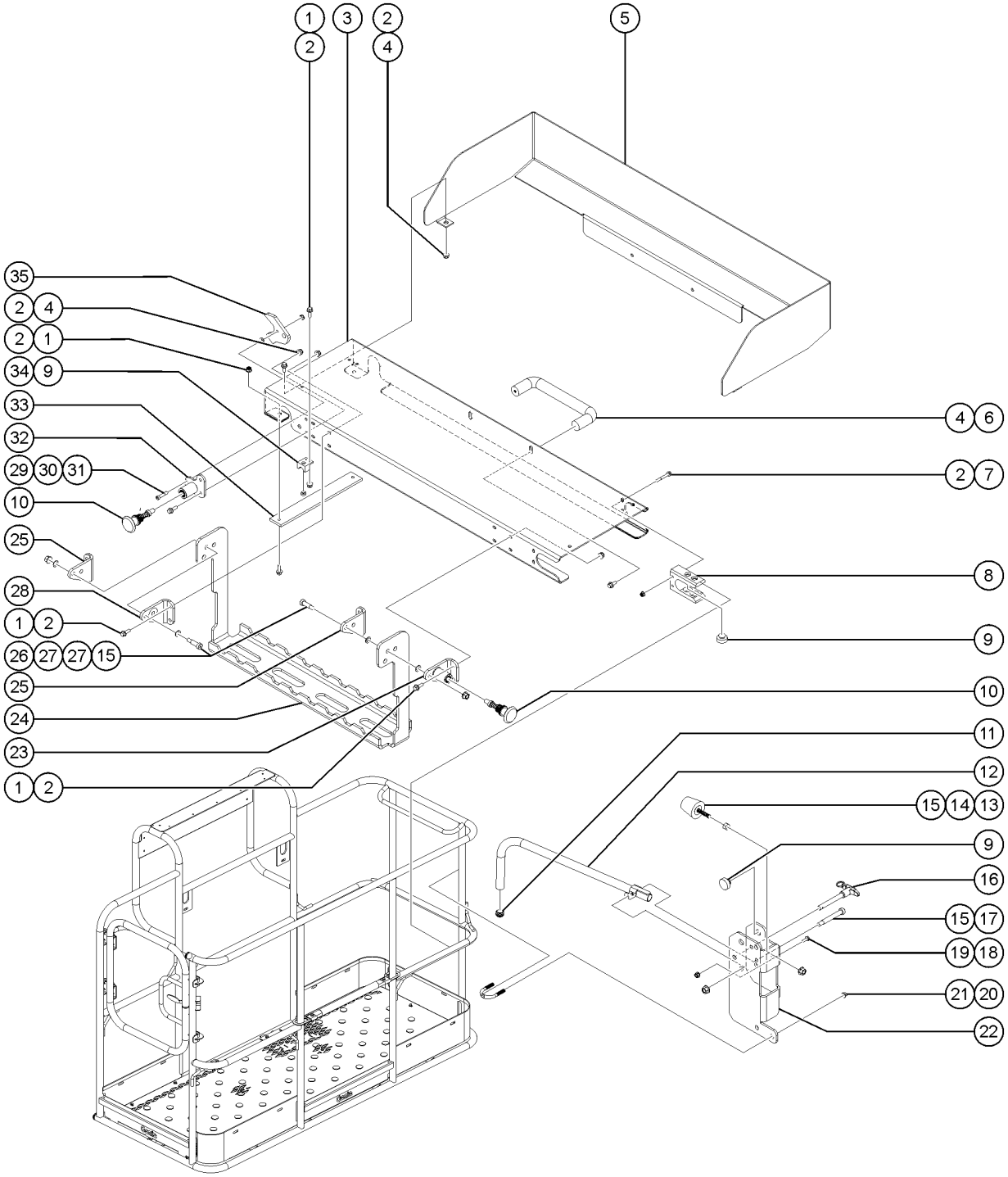

Item	Part No.	Description	Qty.
27	1292828GT	WASHER,FLAT,.39,.625,.036,ZAG	4
28	1291803GT	FORMING, ACCESS DECK RIGHT EYE, 8FT PLATFORM	1
29	1291818GT	BOLT,SHS,1/4X.75X1/4-20,ZAG	1
30	1291821GT	WASHER, FLAT, 1/4X1/16X1/2, AL	1
31	1283026GT	NUT,LP NYLOCK,1/4-20,2,ZAG	1
32	1291809GT	WELDMENT, LIFT TOOLS MIDRAIL LOCK	1
33	1293704GT	PLATE, STIFFENER BAR	2
34	1291813GT	WEAR PAD, VERTICAL MIDRAIL SLOT	2
35	1291806GT	PLATE, MIDRAIL HOOK	1

831.1 Quickfit Oil Change System Ready (from SN S85XCH-3129)

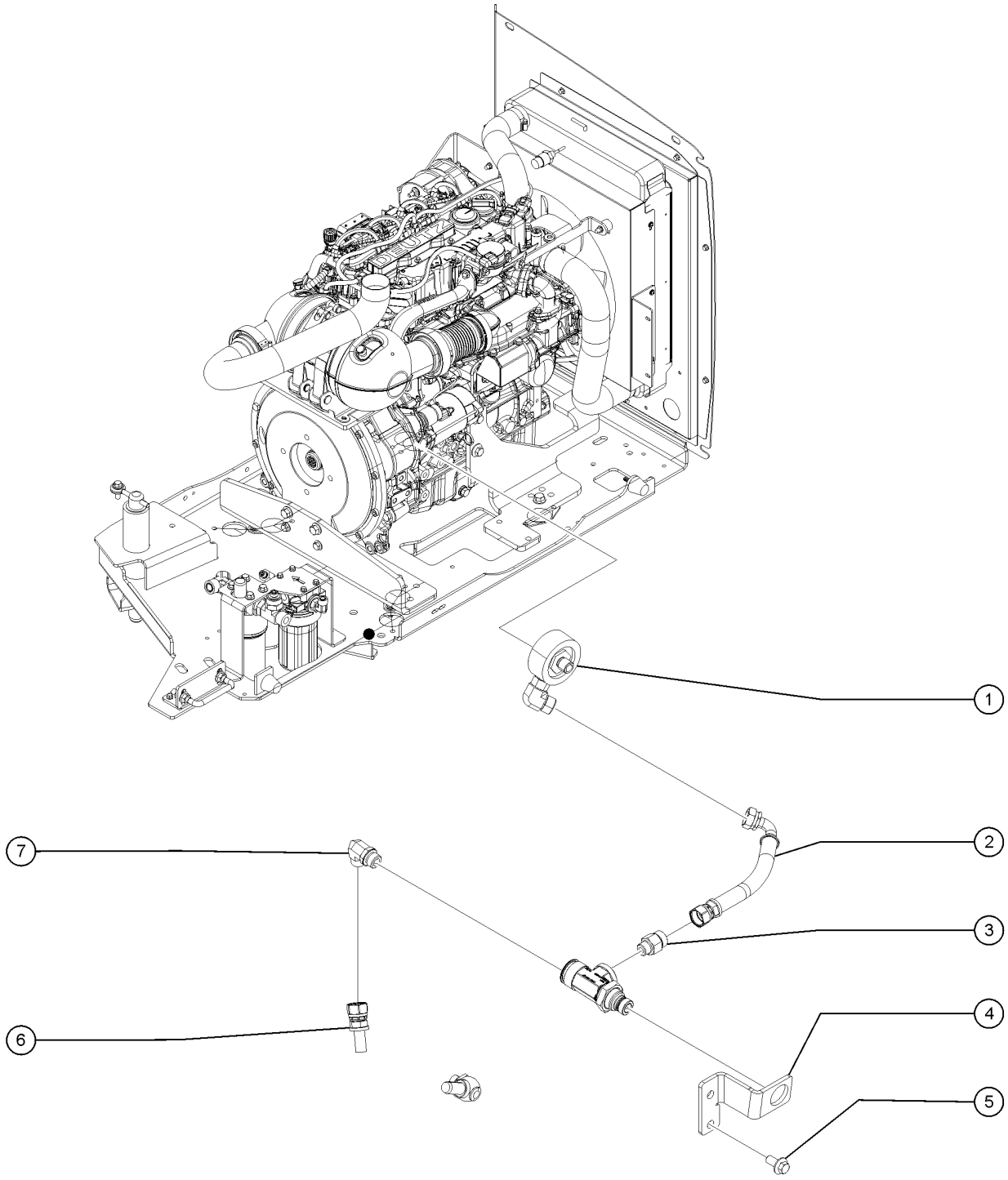

831.1 Quickfit Oil Change System Ready (from SN S85XCH-3129)

Item	*Part No.*	*Description*	*Qty.*
1	1313118GT	RPM QUICKFIT KIT	1
2	1310911-950GT	ASSY, HOSE, OIL, -10, 300, STR, 90, 9.50 IN	1
3	56604GT	CONN,520120-10-8	1
4	1310898GT	BRACKET, QUICKFIT, OFFSET, 8 DOWN	1
5	231087GT	SCREW,HHF,M12-1.75X25,DIN6921,10.9,ZAB	2
6	1310910-975GT	ASSY, HOSE, OIL, -10, 300, STR, BANJO, 9.75 IN	1
7	48950GT	ELBOW,90D,520220-10	1

832.1 Access Manager Option

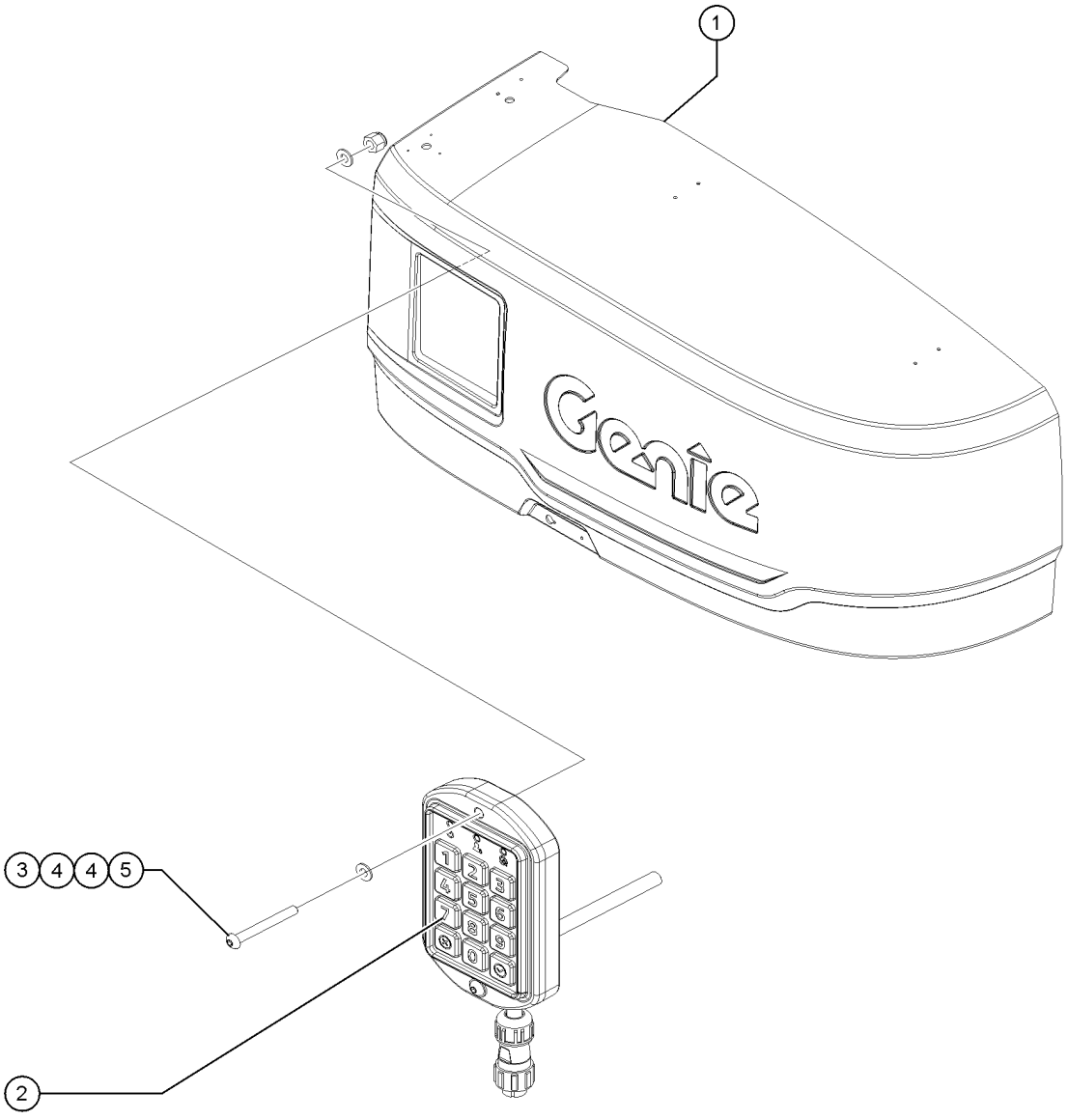

Item	*Part No.*	*Description*	*Qty.*
A	1296897GT	HARNESS, ACCESS MANAGEMENT, 164"	1
B	1273629GT	WIRE CLAMP, ADHESIVE, ADJUSTABLE, 7/16"	6
1		Ref. Cover, Tank Side (refer to 304.1)	
2	1296895GT	KEYPAD, ACCESS MANAGEMENT, LIFT CONNECT	1
3	1300832GT	SCREW, BHC, M4-0.7X35, 10.9,ZAB	2
4	825357GT	WASHER,FLAT,M4,DIN125,ZAB	4
5	1283019GT	NUT,NYLOCK,M4-0.7,DIN985,8,ZAB	2

Part no.	Page Number
1268GT	13
1484GT	13
1487GT	491
1488GT	491
4828GT	355
5224GT	355
5365GT	249
5397GT	253, 447, 459, 463
6024GT	257
6091GT	253, 265
6095GT	71
6097GT	355
6146GT	249, 505
6178GT	249, 257, 273, 459, 463. 501
6198GT	69
6584GT	249
6637GT	253
6638GT	249, 253, 265, 447
6782GT	253, 463
6833GT	275, 345, 381, 387, 485. 489
6935GT	481, 483
7056GT	471
7057GT	471, 481, 483
8149GT	89
9599-SGT	433
10777GT	481
12344GT	457, 463
13000GT	459, 463
13002GT	253
13003GT	257
13064GT	257
13268GT	279, 293, 317, 381, 387
13585GT	481
16073GT	321
18396GT	353, 357, 359
18596GT	257
18605GT	309
18665GT	457, 463
18666GT	113, 249, 253, 269, 305. 321...
19018-1100GT	453
19060GT	407
19274GT	125, 133
20776GT	457, 463
20973GT	165, 177, 187, 191, 195. 197...
21130GT	73, 249
21141GT	77, 81
21465GT	261, 295, 297, 317, 321
21618GT	273, 485, 489
22571GT	303, 431, 433
22578GT	249
22672GT	263, 295, 299, 313, 317
23405GT	443, 445
24038GT	263, 295, 313
24514GT	371, 375
25282GT	479
25817GT	65, 345
25994GT	17, 21
27082GT	303
27089GT	259
27204GT	25, 27, 51, 53
27205GT	25, 27, 51, 53
27206GT	25, 27, 51, 53
27207GT	25, 27, 51, 53
27391GT	181, 485, 489
27581GT	13
27697GT	331, 335
27698GT	65, 69, 347
27901GT	79, 321
28158GT	17, 21, 43, 47
28159GT	17, 21, 43, 47
28160GT	17, 21, 43, 47
28174GT	29, 35, 39, 55, 61, 63
28235GT	29, 35, 39, 55, 61, 63
28236GT	35, 39
28301GT	91, 97
28646GT	105
28750GT	13, 393
29104GT	25, 27
29261GT	485, 491
29557GT	259
29559GT	259
29560GT	13, 259
29739GT	413
29868GT	69, 79, 83, 85, 91, 95...
30199GT	67
30220GT	357, 361
30221GT	65
30222GT	357, 361
30468GT	435
30489GT	253, 265
30490GT	259
30810GT	259
30971GT	265, 277, 299, 443, 445. 505
30973GT	85
30997GT	113, 381, 387
31060GT	17, 21, 31, 33, 35, 39
31099GT	401, 403
31523GT	443, 445
31779GT	13
31788GT	17, 21
31983GT	261
32150GT	13
32151GT	13
33277GT	303
33418GT	257
33428GT	65, 361
33441GT	75
33550GT	17, 21, 35, 39, 43, 47...
33555GT	91, 95
33576GT	179
33674GT	491
33784GT	275
33990GT	75
33994GT	13, 393
34058GT	305
34164GT	277
34344GT	309
34533GT	443, 445
34619GT	435
34955GT	443, 445
35418GT	297
35432GT	443, 445
35434GT	263, 313, 317, 443, 445
35726GT	397
35732GT	333
35956GT	433

Part no.	Page Number
36208GT	263, 315
36388GT	281, 497
37187GT	85
37192GT	85
37947GT	93, 95
38149GT	29
39540GT	107, 109, 381, 387
39908GT	123, 177, 239
40434GT	497
40766GT	273, 381, 387
41549GT	103
41858GT	309
42079GT	327
42104GT	491
42111GT	479
43018GT	65, 399
43392GT	373, 377, 435, 491, 509, 513
44981GT	29, 35, 39, 55, 61, 63
45345GT	443, 445
45435GT	265, 277, 299, 315, 317, 505
45454GT	251
45470GT	295
45708GT	87
45912GT	405
45921GT	405, 407
46131GT	79, 273
46188GT	485
47025GT	479
47041GT	25, 27
48867GT	87
48875GT	479
48880GT	87, 411
48885GT	105
48887GT	105
48894GT	427, 429
48904GT	423
48905GT	415, 423, 427, 429
48907GT	423
48909GT	415
48911GT	415
48912GT	421, 479
48914GT	419
48915GT	415, 419, 421, 469, 475
48916GT	415, 423
48918GT	87, 423
48920GT	419, 425
48927GT	421
48928GT	423
48929GT	469
48930GT	419
48932GT	87, 415, 423
48933GT	79, 83, 415, 421, 423, 427...
48935GT	421
48936GT	415
48946GT	421, 425, 475
48948GT	415
48950GT	517
48959GT	77, 81, 415, 421
48960GT	415, 421, 427, 429, 469, 475
48963GT	421, 469, 475
48964GT	421
48974GT	469
48975GT	469
48976GT	421
48977GT	421
48983GT	421, 469, 475
48984GT	77, 81, 421, 475
48985GT	469, 475, 477
48992GT	469, 475, 477
48996GT	77, 81, 421
48997GT	411
49000GT	81, 455
49116-1437GT	425
49116-2437GT	427, 429
49116-2637GT	427, 429
49116-3137GT	415
49117-4891GT	417, 419
49117-5391GT	415
49117-6191GT	423
49117-11491GT	415
49117-12291GT	429
49119-1378GT	425
49119-2478GT	427, 429
49119-4578GT	415
49119-4978GT	429
49119-5278GT	427
49119-5378GT	427
49119-11378GT	415
49120-7581GT	479
49128-2409GT	415
49128-2609GT	423
49128-3709GT	417
49128-4029GT	469, 475
49128-4209GT	419
49128-4509GT	419
49128-7600GT	425
49128-50409GT	427, 429
49128-66409GT	427
49128-73609GT	429
49130-2957GT	415
49130-8382GT	419
49130-51182GT	427, 429
49130-63782GT	427
49130-70782GT	429
49137-5041GT	427, 429
49137-14429GT	427, 429
49141-11463GT	415
49141-17463GT	427, 429
49143-2829GT	423
49143-3354GT	421
49143-4754GT	421
49149-2526GT	415
49149-3126GT	423
49151-1898GT	425
49151-3548GT	423
49163-8594GT	479
49183-2692GT	423
49183-4692GT	415
49183-5092GT	415
49189-6838GT	105
49212GT	481
49214GT	481
49215GT	483
49364GT	303
49379GT	431
49408GT	431, 433

Part no.	Page Number
49418GT	419
49519GT	475, 477
49612GT	13, 393
49613GT	393
49768GT	73
49816GT	103, 249, 501
49817GT	257
49826GT	83
49915GT	259
49924GT	13, 15, 259, 263
50035GT	105
50787-SGT	249
51144GT	67
52087GT	413
52352GT	259
52475GT	25, 27, 51, 53
52692GT	25, 27, 51, 53
52714GT	409
52715GT	409
52865GT	29
52866GT	253, 277, 299, 317
52943GT	401, 403
52967GT	25, 27, 51, 53
53387GT	69
53471GT	189
53605GT	455
53952GT	277, 299, 317
54065GT	353, 357, 359
54085-2918GT	475
54124GT	321
54205GT	295
54255GT	125, 129, 133
54283GT	475
54324GT	77
54365GT	459, 463
54428GT	263
54486GT	435
54932GT	273
55753GT	373, 377, 433, 451, 485. 489...
56003GT	423
56424GT	371, 375, 433, 447, 449. 451...
56426-700GT	485, 489
56445GT	127, 133, 135
56525GT	451
56570GT	453
56604GT	517
56687GT	241
56704GT	431
56912GT	69, 79, 83, 85, 91, 95...
56934GT	447
58222GT	101
58223GT	101
58237GT	75
58249GT	259
58303GT	405
58304GT	99
58386GT	283
58412GT	15, 283
58415GT	277, 299
58489GT	85
58566GT	259
58630GT	259
58634GT	285
58999GT	75
59370GT	65
59371GT	77, 81
60143-SGT	455
60304GT	331, 335, 339, 341
60334GT	13, 101
60425GT	141, 145, 149, 153, 157. 163...
60427GT	195, 197
60428GT	139, 157, 161
60429GT	139, 141, 157, 161, 165. 167...
60433GT	123, 239
60435GT	125, 127, 129, 131, 133, 135...
60439GT	143, 147, 149, 155, 159, 163...
60441GT	143, 145, 149, 153, 159, 163...
60443GT	141, 143, 149, 153, 159. 163...
60447GT	127, 131, 133, 135
60452GT	141, 145, 149, 153, 157, 161...
60459GT	139, 141, 145, 149, 155. 157...
60460GT	139
60521GT	141, 191, 305, 477
60526GT	125, 129, 133, 135
60527GT	123, 127, 131, 133, 135. 141...
60528GT	127, 131, 133, 135, 141. 147...
60531GT	191
60532GT	123, 191, 239
60536GT	13
60555GT	67
60561GT	255
60575PGT	105
60584GT	257, 267
60585GT	293
60757GT	111
60840GT	331, 335, 339, 341
60857GT	15, 101
60875GT	277
60984GT	347
61079GT	429
61083GT	77, 81, 421, 469, 475
61110GT	253
61268GT	427
61283GT	353, 355, 359
61321GT	423, 427, 429
61602GT	353, 357, 359
61745GT	331, 335, 479
62127GT	411
62337GT	411
62392GT	391
62414GT	85
62420GT	15, 277, 299, 317
62425GT	13, 15, 253
62476GT	253, 299
62506GT	399
62507GT	399
62822GT	139
63375GT	457
63463GT	277, 299, 317
64066GT	283
65278GT	25, 27, 51, 53
65620GT	285
65621GT	15
65622GT	285
65623GT	15, 285
65624GT	283

Part no.	Page Number
65625GT	283
65626GT	15
65630GT	451
65636GT	325
65638GT	325
65810GT	277, 299
65846GT	75
66031GT	87
66399GT	13
66472GT	485, 489
66811GT	107, 109
66812GT	107, 109, 379, 385
66813GT	107, 109, 379, 385
66815GT	379, 385
66816GT	107, 109
66817GT	107, 109, 379, 385
66818GT	107, 109
66821GT	107, 109
67504GT	191
67505GT	141
69550GT	405
69775GT	263
70257GT	277
70289GT	351
70367GT	293, 317
70381GT	253, 267
70444GT	249, 301
70445GT	249
70448PGT	251
70449GT	249, 299
70452GT	281, 305, 321
70454GT	257
70455GT	257
70456GT	257
70465GT	249, 277
70483GT	251, 299
71259GT	477
71911GT	249, 269, 299
72086GT	17, 21, 29, 43, 47, 55
72282GT	431
72326GT	107, 109
72348GT	303
72875GT	35, 39
72999GT	17, 21
73463-1175GT	447
73478PGT	371, 375
73575GT	295, 371, 375, 499
73717GT	111, 125, 129, 133, 135, 381...
73723GT	141, 145, 149, 153, 159. 163...
73725GT	167
73730GT	111, 125, 129, 133
73736GT	111, 125, 129, 133
73900GT	369
74006GT	457, 471, 481
74052GT	481
74389GT	343
74902GT	401, 403, 407, 409
74913GT	463, 471
75020GT	15, 295
75051GT	249
75064GT	347
75097GT	13, 347
75185GT	431, 433
75254GT	77, 81, 423
75256GT	77, 81, 423
75257GT	77, 81
75278-4729GT	415
75278-4829GT	415
75278-5029GT	417
75278-5229GT	415
75289GT	253
75443GT	391
75444GT	391
75445GT	391
75446GT	391
75447GT	391
75448GT	391
75449GT	391
75450GT	253
75451GT	253
75462GT	411
75614GT	77, 81, 425
75617-1025GT	487, 489
75617-1550GT	485, 489
75617-2075GT	487, 491
75617-2275GT	485, 489
75617-3138GT	487
75629GT	143, 145, 149, 153, 159. 163...
75636GT	485, 489
75640GT	165, 197, 247
75854GT	477
75855GT	477
76695GT	355, 359
77482GT	325
77501GT	407
77519GT	65
77540GT	285
77550GT	283
77551GT	285
77653GT	345
77656GT	343
77664GT	447, 449
77683GT	447
77694GT	89
77750GT	291
77785GT	455
77797GT	485, 489
77822GT	289
77853GT	455
77884GT	339
78736GT	87, 99, 253, 267, 269, 279...
80543GT	457, 471
81154GT	79, 269, 273
81175GT	357, 361
81330GT	65
81340GT	327
81341GT	327
81342GT	327
81347GT	341
81368GT	451
81378GT	69
81424GT	283
81467GT	253, 265
81468GT	253, 265
81488GT	381, 387
81498GT	69

Part no.	Page Number
81522GT	309
81578GT	103
81609GT	71
81610GT	71
81700GT	443, 445
81802GT	487, 491
81812-14692GT	415
81972GT	479
81973GT	479
81975GT	479
81986PGT	101
82161GT	17, 21
82237GT	29, 35, 39, 457
82366GT	17, 21
82410GT	35, 39
82481GT	43, 47
82487GT	43, 47, 61, 63
82862GT	35, 39
83047GT	287
83093GT	93, 95
83098GT	391
83141GT	413
85300GT	451
87085GT	329
87172GT	423
87755GT	111, 125, 129, 133, 135, 381...
88092GT	71
88241GT	67
88261GT	65
88280GT	357, 361
88331GT	127, 129, 133, 135, 141, 225
88332GT	123, 127, 129, 133, 135, 137...
88349GT	65
88356-12B43GT	193
88356-13107GT	175
88356-32163GT	169
88356-33103GT	171
88377-1400GT	447
88390GT	485, 489
88406GT	467
88516GT	353, 357, 361
88568GT	345
88606PGT	435
88607PGT	435
88846GT	277
88936GT	469, 475
88942-6654GT	469, 475
88942-6754GT	421, 469, 475
88942-9554GT	421
88943-9136GT	475
88943-9336GT	469, 475
88949-4328GT	469, 475
89310GT	405
89312GT	407
89449GT	415, 419
89733GT	399, 407
89737GT	407
89738GT	407
89765GT	15, 303
89770GT	399
89871-2448GT	415
89871-2898GT	469
89871-5348GT	421
89871-5648GT	421
89871-5848GT	421
89959GT	441
89997GT	257
93500GT	13
94324GT	277
94327GT	13
94374-4755GT	421
94374-9730GT	469, 475
94493-SGT	447
94652GT	127, 131, 133, 197, 227
94759GT	397
94762GT	325
94937GT	105
94981GT	501
94982GT	103, 459
96770GT	273
97469GT	411
97579GT	35, 39
97602GT	29
97815GT	35, 39, 61, 63
97865GT	17, 21
99087GT	181, 185, 191, 197, 223
99343GT	135, 165, 247
99344GT	135, 165, 247
99778GT	495
101070GT	65, 69
101085GT	307
101525GT	465
101559GT	331, 335
101566GT	347
101640GT	267
101681GT	235
101726GT	79
101929-1809GT	421
101932GT	355, 361, 437
101943GT	65
101964GT	95
102045GT	257, 269
102066GT	305, 321
102121GT	317
102313-17526GT	427, 429
102348GT	307
102355-3163GT	475
102526GT	407
102528GT	407
102586GT	259
102587GT	259
102589GT	13
102590GT	259
102785PGT	435
102786PGT	435
102940GT	405, 407
102992GT	371, 375
104235GT	71
104570GT	87, 351
104804GT	373, 377
105214GT	367
106033GT	259
106034GT	259
106073GT	459
106079GT	401, 403
106098GT	65

Part no.	Page Number
106104GT	457
106115GT	121, 235
106117GT	65, 71
106118GT	65, 71
106122GT	75
106125GT	75
106141GT	465
106204GT	467
106211-300GT	267
106211-600GT	265
106226GT	297, 317
106273GT	465
106275GT	465
106495GT	457
106780GT	125, 129, 133, 135, 141
106860GT	467
106923GT	269
107578GT	69
107742GT	399
107752GT	405
107753GT	405
108855GT	353
110149GT	297
110194GT	407
110198GT	405, 407
110209GT	407
110276GT	465
110277GT	465
110304GT	293
110654GT	135
110876GT	331, 335
111363GT	75
111445GT	259
111526GT	435
111576GT	459
111580GT	509, 513
111778GT	405, 407
111818GT	83
112043GT	295
114249GT	51, 53
114251GT	43, 47, 55
114252GT	43, 47, 57, 59, 61, 63
114258GT	17, 21, 29
114390GT	17, 21, 29, 35, 39
114416GT	35, 39
114473GT	61, 63
115048GT	411
117310GT	331, 335
117312GT	331, 335
119053GT	313
119056GT	141, 145, 149, 153, 157, 163...
119057GT	139, 141, 145, 149, 153, 157...
119058GT	141, 165, 167, 177, 189, 191
119060GT	123, 239
119061GT	125, 129, 133, 135, 143, 147...
119062GT	123, 129, 133, 135, 143, 147...
119063GT	127, 131, 133, 197
119064GT	125, 129, 133, 135, 197
119065GT	175, 175, 177, 179, 187, 189...
119066GT	139, 197, 495
119067GT	167
119116GT	405
119170GT	291
119218GT	261
119219GT	313
119403GT	481, 495
119475GT	283
119619GT	331, 335
119620GT	67
119644GT	111
119761GT	169, 171
119915GT	391
119918GT	83
121028GT	345
121029GT	331, 335
121031GT	347
121033GT	349
121034GT	343
121044GT	343
121045GT	339
121063GT	329
121064GT	329
121065GT	327
121066GT	501
121085GT	481
121089GT	347
121146GT	343
121155GT	343
121156GT	343
121163GT	341
121164GT	331, 335, 339
121167GT	437
121170GT	437
121173GT	437
121181GT	345
121189GT	345
121215GT	101
121216GT	99
121217GT	99
121218GT	99
121219GT	99
121268GT	65
121270GT	65
121271GT	67
121272GT	67
121286GT	65
121287GT	67
121316GT	439
121317GT	439
121353GT	103
121366GT	423
121371GT	67
121381GT	103
121387GT	351
121388GT	351
121389GT	477
121393GT	103
121399GT	347, 351
121406GT	347
121410GT	249
121413GT	441
121420GT	249, 253, 265
121421GT	251, 253
121422GT	249
121423GT	249
121430GT	251

Part no.	Page Number
121474GT	121, 209, 235
121489GT	431
121563GT	253
121582GT	371, 375, 467
121595GT	481
121603GT	303, 305
121608-9175GT	421
121615GT	249
121619GT	121, 199, 235
121622GT	121, 201, 235
121657GT	139, 141
121658GT	339
121670GT	343
121671GT	343
121681GT	423
121682GT	423
121683GT	423
121684GT	423
121685GT	423
121688GT	251, 257
121690GT	85
121754GT	331, 335
121777GT	423
121787-12291GT	429
121819GT	351
121822GT	351
121860GT	279
121869GT	351
122019GT	431
122073GT	433, 485, 489
122120GT	401, 403, 407
122121GT	401, 403
122148GT	401, 403
122641GT	409
122643GT	405
122644GT	409
122645GT	407
122646GT	407
122647GT	407
122649GT	405
122650GT	407
122651GT	405
122652GT	405
122653GT	407
122656GT	407
122657GT	405, 407, 409
122660GT	407
122661GT	329
122662GT	329
122663GT	329
122664GT	329
122665GT	329
122666GT	329
122668GT	329
122878GT	75
122879GT	75
123167GT	253, 267
124962GT	267, 269
128000GT	391
128001GT	391
128003GT	299
128004GT	253, 267
128200GT	245, 379, 385
128201GT	111
128203GT	111, 379, 385, 485, 489
128204GT	379, 385
128268GT	357, 363
128483GT	355, 361
128584-SGT	379, 385
128588GT	295
128829GT	249
128929-300GT	471
128953GT	29
128991GT	325
133067GT	43, 47, 55, 61, 63
133177GT	25, 27
133205GT	43, 47
133232GT	17, 21
133278GT	17, 21
133310GT	17, 21
133411GT	55
139231GT	421
139308GT	99
139309GT	99
139315GT	99
139321GT	251
139322GT	249
139323GT	99
139338GT	379, 385
139455GT	253
139508GT	393
139512GT	393
139527GT	393, 395
139528GT	393, 395
139598GT	391
139610GT	287, 289
139712GT	393
139715GT	393
139716GT	393
139717GT	393
139718GT	393
139719GT	393, 395
139727GT	393
139799GT	413
139936GT	307
144161GT	481
146051GT	75
146052GT	75
146180GT	85
146181GT	85
146182GT	85
146413GT	83
146415GT	83
146417GT	83
146478GT	379, 385
146551GT	83
146552GT	83
147121GT	371, 375
147419GT	77, 81
147550GT	413
160809GT	369
161144GT	397
161145GT	397
161938GT	261
162207GT	275
162208GT	273

Part no.	Page Number
162209GT	273
162276GT	269
162283GT	263
162284GT	263
214225GT	357, 361
214226GT	357, 359
214228GT	15, 273
214249GT	495
214393GT	87
214536GT	495
214620GT	465
214621GT	465
214622GT	465
214623GT	465
214795GT	275
215209GT	87
215210GT	87
215254GT	93, 95
215280GT	291
216150GT	299, 317
216611GT	495
216612GT	495
216615GT	495
216616GT	495
216617GT	495
216618GT	495
216645GT	495
216646GT	495
216659GT	495
216662GT	495
216680GT	495
216683GT	495
217203GT	257
217366GT	465
218144GT	399
218165GT	379, 385
218448GT	329
218449GT	107, 109
218457GT	381, 387, 435
218458GT	471
218559GT	35, 39
218715GT	263
219158GT	493
219243GT	397
219245GT	397
219247GT	397
219393GT	351
219487GT	35, 39
219508GT	263, 275, 505
219956GT	61, 63
219958GT	61, 63
226388GT	135
226389GT	165, 247
226390GT	165, 247
226393GT	431
226542GT	353, 357, 361
226947GT	165, 247
226948GT	135, 381, 387
227564GT	179
227618GT	119, 179, 233, 371, 375
227785GT	105
227804GT	67
227805GT	67
227985GT	67
228805GT	67
228848GT	447
228849GT	447
229110GT	141, 145, 149, 153, 157, 243
229567GT	379, 381, 385, 387
229986GT	267
230820GT	293
231034GT	405
231087GT	323, 517
231513GT	93, 97
231530GT	299
231532GT	93, 95
231868GT	471
232844GT	343
233509GT	361
233992GT	447
233993GT	447
235137GT	75
235152GT	75
235154GT	75
236251GT	271
236259GT	273
236260GT	15, 275
237068GT	87
237234GT	405
237241GT	349
237242GT	349
237711GT	495
237730GT	265
237830GT	69
237832GT	297
238123GT	495
238330GT	363
285148GT	457
822087GT	271, 273
822224GT	381, 387
822250GT	125, 129, 133, 135, 139, 159...
822436GT	145, 157, 163, 241
822437GT	145, 159, 163, 241
822438GT	145, 157, 161, 241
822439GT	145, 157, 161, 241
822440GT	147, 157, 161, 241
822442GT	145, 241
822445GT	145, 157, 161, 241
822448GT	145, 157, 161, 243
822449GT	157, 161, 243
822450GT	145, 161, 243
822459GT	161
822462GT	143, 145, 149, 153, 157, 161...
822463GT	141, 145, 149, 153, 157, 161...
822464GT	143, 147, 149, 153, 157, 163...
822465GT	143, 147, 149, 153, 157, 163...
822466GT	141, 143, 145, 147, 149, 153...
822467GT	141, 145, 149, 153, 157, 161...
822468GT	141, 145, 149, 153, 157, 161...
822469GT	141, 145, 149, 153, 157, 161...
822548GT	463
822606GT	261
822759GT	485, 489
822768GT	485, 489
822769GT	485, 489
822771GT	489

Part no.	Page Number
823012GT	269
823013GT	271
823113GT	25, 27, 51, 53
823135GT	269
823143GT	267
823144GT	265
823147GT	267
823229GT	263
823239GT	265
823356GT	79
823368GT	87
823420-1772GT	273
823421GT	273
823520GT	431
823703GT	265
823751GT	263, 299
824027GT	73, 293, 373, 377, 433, 435...
824028GT	433, 451
824029GT	295, 485, 489
824031GT	115, 117
824032GT	495
824038GT	447, 485, 489
824041GT	73
824059GT	69, 93, 95, 457
824060GT	457, 459, 493
824062GT	101
824063GT	69, 99
824064GT	349
824065GT	355, 363
824067GT	353
824068GT	341
824069GT	437, 493
824075GT	361, 365
824077GT	295
824078GT	79, 83, 87, 91, 95, 101...
824079GT	83, 85, 97, 101, 249, 261...
824080GT	321, 357, 505
824081GT	87, 277, 351, 353, 357, 361...
824082GT	267, 269, 279, 281, 371. 375...
824083GT	89, 331, 335, 451
824085GT	277, 451
824086GT	87, 265, 433, 449, 459, 471
824087GT	471
824089GT	65, 73, 79, 83, 85, 101...
824090GT	69, 77, 81, 87, 91, 95...
824091GT	87, 267, 273, 281, 309, 327...
824092GT	105, 331, 335, 339, 355. 359...
824093GT	361
824107GT	105
824109GT	353
824110GT	437
824113GT	69, 87, 91, 97, 99, 317...
824115GT	309
824116GT	115, 117, 361, 365
824120GT	263, 295, 313, 493
824123GT	269
824124GT	87, 437
824127GT	65
824129GT	65, 345
824131GT	265
824132GT	269, 293
824133GT	297, 301
824134GT	65, 69
824145GT	267
824146GT	347
824207GT	451, 491
824214GT	111, 381, 387
824215GT	273, 435, 477, 481
824216GT	331, 335, 345, 351
824220GT	261, 293, 471
824226GT	111
824351GT	273
824471GT	79
824615GT	29
824617GT	459
824673GT	273
824874GT	321
825015GT	269
825019GT	67, 69, 353, 355, 359
825218GT	261
825348GT	67, 71
825352GT	431
825353GT	361, 365
825357GT	519
825358GT	433, 451, 465
825737GT	459
825759GT	67
825760GT	347, 351
825762GT	347
825796GT	343, 353, 355, 359
825939GT	267
825948GT	441
826000GT	269
826138GT	121, 211, 235
826152GT	263
826171GT	105, 413
826214GT	471
826215GT	471
826345GT	17, 21
826357GT	273
826379GT	343
826516GT	337, 495
826559GT	105
826624GT	483
826795GT	261
826825GT	261
826835GT	263
826859GT	263
826873GT	269
1251496GT	271
1251502GT	101
1251503GT	101
1251504GT	101
1251505GT	101
1251506GT	101
1251565GT	269, 327, 343, 353, 355. 359
1251600GT	371, 373, 447, 453, 483. 493...
1251757GT	79, 505
1251814GT	325
1251819GT	325
1251899GT	267, 269
1251928GT	263
1251983GT	265, 295
1251997GT	105, 497
1252686GT	303, 325
1252687GT	267

Part no.	Page Number
1252940GT	325
1252942GT	325
1252978GT	437
1252979GT	297
1253185GT	113, 261, 273, 295, 337, 345...
1253192GT	293
1253193GT	295
1253194GT	293
1253208GT	263, 295, 321
1253250GT	247
1253264GT	95
1253319GT	263, 269, 295
1253431GT	295, 317
1253477GT	111, 273, 381, 387
1253478GT	77, 81, 91, 95, 343, 359
1253485GT	73, 99, 509, 513
1253487GT	301, 317
1253489GT	471, 481
1253490GT	305, 309
1253498GT	69, 279, 299
1253573GT	307, 321
1253574GT	305, 323
1253795GT	431
1253796GT	431
1253815GT	349
1253830GT	91
1253831GT	91
1254360GT	119, 191, 235, 477
1254471GT	295
1254594GT	263
1254717GT	265
1254823GT	261
1254826GT	259
1254949GT	265
1255391GT	327
1255393GT	85
1255469GT	81
1255537GT	297
1255538GT	459, 473
1255581GT	17, 21, 29, 43, 47, 55
1255582GT	17, 21, 43, 47
1255651GT	271
1255653GT	259, 263
1255665GT	267
1255666GT	253, 267
1255753GT	379, 385
1255756GT	355, 359
1255757GT	87
1255758GT	359, 485, 489, 493
1255760GT	85, 309
1255763GT	93, 95
1255768GT	99
1255769GT	99
1255770GT	99
1255771GT	99
1255772GT	99
1255773GT	99
1255788GT	481
1255797GT	331, 335
1255802GT	69, 281
1255804GT	85, 309
1255805GT	85, 93, 97
1255806GT	267, 269, 303
1256054GT	93, 95
1256108GT	437
1256110GT	355, 361
1256111GT	351
1256112GT	347
1256123GT	101, 327, 481
1256126GT	309
1256127GT	87, 91, 97, 359
1256169GT	269
1256177GT	105
1256180GT	355, 361
1256182GT	105
1256267GT	69
1256312GT	443, 445
1256377GT	497
1256378GT	497
1256379GT	497
1256380GT	497
1256389GT	497
1256400FRGT	497
1256400GT	497
1256425GT	55, 61, 63
1256439GT	497
1256457GT	249
1256464GT	433
1256468GT	85, 493
1256481GT	497
1256514GT	299
1256679GT	95
1256776GT	269
1256803GT	347
1256804GT	435
1256837GT	101, 345
1256842GT	103
1256843GT	361, 365
1256846GT	101
1256851GT	105, 497
1256855	371, 375, 447, 509
1256855GT	107, 109, 449, 513
1256856GT	67, 69, 91, 95, 345, 497
1256857GT	349
1256860GT	99
1256863GT	99, 345
1257227GT	381, 387, 435, 459
1257296GT	471, 483
1257390GT	111, 471, 483
1257410GT	107, 109
1257454GT	85
1257464GT	367
1257481GT	267
1257628GT	91, 95, 263
1257705GT	305, 321
1257721GT	457
1257723GT	101
1257727GT	99
1257733GT	13
1257810GT	305, 321
1257862GT	305, 321
1257866GT	99, 305, 321
1257867GT	327
1257868GT	479
1257869GT	479
1257995GT	301

Part no.	Page Number
1258014GT	299
1258071GT	297
1258100GT	125, 129, 133, 139, 159, 163
1258174GT	17, 21, 29, 43, 47, 55
1258175GT	17, 21, 43, 47
1258176GT	17, 21, 29, 43, 47, 55
1258177GT	17, 21, 43, 47
1258563GT	115, 117
1258567GT	13
1258568GT	299
1258641GT	271
1258674GT	463
1258687GT	463
1258688GT	463
1258689GT	463
1258722GT	91, 97
1258723GT	91, 95
1258724GT	91, 97
1258728GT	347
1258768GT	111
1258771GT	271
1258949GT	21, 47
1258950GT	17, 43
1258951GT	233, 245
1258952GT	381, 387
1258972GT	29
1259106GT	85, 309, 367
1259264GT	297
1259329GT	487, 491
1259583GT	435
1259584GT	435
1259661GT	495
1259708GT	495
1259757GT	303
1259855GT	85, 309
1259890GT	295
1259907GT	295
1259931GT	65
1259995GT	143
1259996GT	143
1260124GT	405
1260125GT	405
1260414GT	305
1260892GT	497
1260910GT	497
1260927GT	295
1260984GT	317
1261001GT	435
1261018GT	497
1261019GT	497
1261020GT	497
1261021GT	497
1261022GT	497
1261023GT	497
1261024GT	497
1261025GT	497
1261184GT	493, 499
1261204GT	295
1261205GT	295
1261236GT	273
1261239GT	275
1261244GT	93
1261245GT	95
1261250GT	459, 463, 509, 513
1261277GT	85, 93, 97, 309
1261655GT	121, 229, 235
1261722GT	297
1261795GT	471
1261815GT	191
1261818GT	141, 191
1261835GT	95
1261836GT	91, 95
1261837GT	93, 97
1261882GT	295
1261963GT	293
1261964GT	293
1261966GT	293
1261969GT	293
1261980GT	303
1262016GT	293
1262017GT	303
1262022GT	303
1262031GT	507
1262047GT	15, 303
1262050GT	303
1262052GT	305
1262210GT	93
1262211GT	95
1262432GT	465
1262467GT	293
1262469GT	293
1262471GT	303
1262478GT	303
1262484GT	15, 303
1262486GT	303
1262490GT	293
1262494GT	303
1262496GT	293
1262498GT	293
1262500GT	293
1262503GT	303
1262585GT	303
1262589GT	293
1262595GT	293
1262598GT	293
1262857GT	145, 161, 241
1262866GT	15, 271
1263250GT	165
1263542GT	43, 47, 55
1263543GT	19, 23, 29
1264101GT	451, 459
1264229GT	505
1264897GT	341
1264934GT	499
1264969GT	85
1265019GT	355, 363
1265397GT	373, 377
1265862GT	135, 381, 387
1265999GT	91
1266019GT	19, 23
1266608GT	177
1266895GT	91
1266897GT	91
1266902GT	91, 97
1266916GT	95
1267070GT	311

Part no.	Page Number
1267074GT	309
1267076GT	309, 321
1267080GT	97
1267081GT	97
1267082GT	91
1267083GT	91
1267121GT	19, 23, 29
1267309GT	95
1267312GT	81
1267313GT	273
1267746GT	371, 375
1267747GT	373, 377
1267807GT	101
1268011GT	357
1268161GT	165, 247
1268186GT	459, 473
1268229GT	101
1268322GT	111
1268327GT	111
1268505GT	349
1268565GT	65
1268568GT	69
1268569GT	69
1268570GT	69
1268571GT	69
1268575GT	73
1268596GT	105
1268597GT	345
1268605GT	327
1268606GT	73
1268651GT	111
1268921GT	269
1269051GT	121, 217, 235
1269052GT	481
1269060GT	121, 219, 235
1269061GT	121, 221, 235
1269080GT	91
1269081GT	97
1269086GT	471
1269107GT	471
1269319GT	69
1269321GT	67
1269322GT	67
1269323GT	65
1269367GT	357, 361
1269424GT	355, 359
1269497GT	381, 387
1269498GT	379, 385
1269499GT	391
1269549GT	277
1269586GT	99
1269593GT	67, 71
1269641GT	371, 375
1269642GT	355, 359
1269698GT	119, 141, 233
1269699GT	119, 145, 233, 273
1269700GT	119, 149, 233
1269701GT	119, 153, 233
1269704GT	143, 147, 149, 155, 159, 163...
1269714GT	119, 169, 233
1269715GT	119, 171, 233
1269717GT	119, 175, 233
1269720GT	119, 183, 235
1269721GT	119, 181, 233, 485, 489
1269722GT	119, 185, 235
1269724GT	119, 187, 235
1269725GT	119, 189, 235
1269729GT	119, 195, 235
1269731GT	121, 197, 235
1269734GT	119, 173, 233, 485, 489
1269738GT	101
1269743GT	119, 123
1269744GT	233, 239
1270121GT	153
1270122GT	153
1270123GT	153
1270130GT	501
1270131GT	501
1270278GT	367
1270309GT	501
1270310GT	501
1270313GT	451
1270314GT	451
1270316GT	451
1270337GT	367
1270570GT	433
1270571GT	433
1270665GT	459, 509, 513
1270810GT	399
1270946GT	413
1270963GT	309
1270964GT	293, 309
1270968GT	29, 55
1270969GT	29, 55
1270970GT	29, 55
1270971GT	29, 55
1270994GT	451
1271018GT	451
1271019GT	451
1271040GT	451
1271061GT	451
1271077GT	433
1271078GT	433
1271081GT	111, 305
1271375GT	501
1271397GT	29
1271713GT	391
1271757GT	443, 445
1271770GT	77
1271772GT	79
1271773GT	79
1271808GT	283
1271815GT	283
1271825GT	283
1271837GT	289
1271845GT	289
1271871GT	291
1271929GT	501
1271984GT	93, 97
1271993GT	327
1272019GT	15, 291
1272024GT	285
1272025GT	283
1272026GT	285
1272027GT	291
1272030GT	285

Part no.	Page Number
1272031GT	287, 289
1272032GT	287
1272033GT	289
1272035GT	287
1272036GT	287
1272037GT	287
1272039GT	285
1272042GT	285
1272043GT	285
1272044GT	283
1272045GT	283
1272046GT	285
1272047GT	285
1272048GT	291
1272049GT	285
1272050GT	285
1272054GT	291
1272055GT	287
1272057GT	285
1272058GT	287
1272059GT	285
1272060GT	283
1272061GT	289
1272062GT	287
1272064GT	287
1272065GT	285
1272067GT	287
1272069GT	285
1272070GT	283
1272122GT	111, 125, 129, 133, 135, 381...
1272123GT	111, 125, 129, 133, 135, 381...
1272230GT	85
1272231GT	89
1272242GT	19, 23, 43, 47
1272303GT	369, 371
1272304GT	369
1272326GT	507
1272433GT	471
1272467GT	309
1272536GT	413
1272957GT	115, 117
1273154GT	283
1273165GT	283
1273328GT	347
1273414GT	347
1273449GT	347
1273629GT	519
1273660GT	331, 335
1273674GT	331, 335, 339
1273678GT	341
1273689GT	339
1273706GT	341
1273734GT	361, 371, 375
1274053GT	249, 309
1274068GT	367
1274069GT	281
1274140GT	503
1274153GT	105
1274164GT	111, 381, 387
1274165GT	87, 91, 95, 99, 249, 261...
1274166GT	345, 359
1274167GT	85, 91, 95, 265, 277, 309...
1274168GT	103, 105, 111, 337, 351, 381...
1274170GT	459
1274172GT	81, 105, 281, 299, 305, 321...
1274175GT	111
1274200GT	275, 305
1274249GT	77
1274251GT	343
1274252GT	343
1274253GT	343
1274314GT	343
1274315GT	343
1274322GT	67, 69, 77, 81, 87, 89...
1274331GT	77
1274338GT	349
1274348GT	341
1274449GT	119, 177, 233
1274450GT	233, 247
1274452GT	121, 205, 235
1274511GT	355, 359
1274550GT	87
1274633GT	333
1274645GT	485, 489
1274859GT	369, 371
1274868GT	345
1274869GT	341, 437
1274900GT	261
1274974GT	87
1275052GT	351
1275087GT	483
1275088GT	371, 375
1275169GT	353
1275248GT	391
1275258GT	391
1275259GT	391
1275285GT	371, 375
1275625GT	349
1275739GT	503
1275746GT	65, 71, 75
1275937GT	107, 109
1275939GT	107, 109
1276017GT	331, 335, 339, 341
1276018GT	331, 335, 339, 341
1276019GT	339, 341
1276021GT	331, 335, 339, 341
1276484GT	357, 363
1276672GT	457
1276677GT	89
1276686GT	503
1276687GT	503
1276688GT	503
1276689GT	503
1276820GT	357, 361
1276822GT	361
1276986GT	459
1277169GT	113
1277202GT	465
1277205GT	467
1277206GT	467
1277207GT	465
1277209GT	465
1277597GT	333
1277775GT	349
1277776GT	349
1277777GT	349

Part no.	Page Number
1277859GT	347
1277861GT	347
1277869GT	349
1277873GT	499
1277904GT	165, 247
1277905GT	165, 247
1277906GT	247
1277924GT	83, 87, 267, 269, 275, 277...
1277952GT	433
1277966GT	433
1278119GT	499
1278124GT	499
1278128GT	97
1278259GT	259
1278263GT	277
1278368GT	499
1278542GT	35, 39, 61, 63, 499
1278567GT	35, 39, 61, 63
1278612GT	381, 387
1278613GT	381, 387
1278629GT	487, 491
1278666GT	331
1278714GT	13
1278793GT	491
1278858GT	369
1278982GT	35, 39, 61, 63, 499
1279049GT	353, 357, 359
1279051GT	343
1279065GT	31, 57
1279066GT	25, 51
1279067GT	33, 59
1279068GT	27, 53
1279520GT	101
1279521GT	101
1279522GT	103
1279531GT	483
1279567GT	353, 355, 359
1279679GT	121, 207, 235
1279680GT	121, 203, 235
1279748GT	103
1279791GT	275, 305
1279799GT	443, 445
1279800GT	443, 445
1279801GT	445
1279802GT	443, 445
1279851GT	381, 387
1279869GT	471
1279871GT	457
1279875GT	121, 215, 235
1280072GT	437
1280073GT	437
1280074GT	437
1280075GT	437
1280076GT	437
1280077GT	437
1280080GT	443, 445
1280126GT	87
1280278GT	499
1280379GT	91
1280390GT	105
1280395GT	351
1280401GT	103
1280487-SGT	233, 239
1280589GT	111
1280592GT	149
1280819GT	19, 23
1280820GT	19, 23
1280967GT	413
1281095GT	121, 231, 237
1281128GT	121, 213, 235
1281137GT	303
1281149GT	507
1281156GT	31, 57
1281157GT	25, 51
1281158GT	33, 59
1281159GT	27, 53
1281165GT	25, 51
1281166GT	27, 53
1281169GT	19, 23, 43, 47
1281170GT	35
1281171GT	39
1281172GT	61
1281173GT	63
1281174GT	35, 39, 61, 63
1281175GT	61, 63
1281179GT	25, 27, 51, 53
1281180GT	19, 23
1281183GT	35, 39
1281184GT	61, 63
1281187GT	19, 43
1281188GT	23, 47
1281481GT	141
1281718GT	77, 81
1281786GT	457
1281789GT	411
1281796GT	101
1281808GT	77, 81
1282117GT	15, 77, 81
1282119GT	261
1282197GT	79, 83
1282286GT	423
1282287GT	423
1282361GT	35, 39, 61, 63
1282400GT	31, 57
1282402GT	33, 59
1282404GT	27, 53
1282406GT	25, 51
1282472GT	379, 385
1282963GT	459
1282993GT	433
1283004GT	507, 509, 513
1283005GT	345, 431, 459, 477, 483
1283007GT	321
1283012GT	111
1283014GT	461, 473
1283019GT	519
1283024GT	361, 365
1283026GT	465, 511, 515
1283027GT	465
1283028GT	353, 355, 357, 361
1283103GT	77, 81
1283179GT	397
1283180GT	85
1283304GT	329
1283305GT	349
1283306GT	327

Part no.	Page Number
1283307GT	355, 361
1283345GT	19, 23, 29, 43, 47, 55
1283383GT	327
1283576GT	469, 475
1283577GT	29, 55, 457
1283720-3266GT	475
1283744GT	31, 33, 57, 59
1283776GT	13
1283841GT	459, 471
1283843GT	457
1283878GT	19, 23, 35, 39, 43, 47...
1283880GT	491
1283938GT	327
1283995GT	261
1284038GT	413
1284196GT	477
1284240GT	477
1284241GT	477
1284242GT	477
1284243GT	477
1284272GT	435
1284348GT	191
1284399GT	411
1284465GT	503
1284523GT	111
1284524GT	381, 387
1284573GT	355, 363
1284617GT	287
1284618GT	285
1284619GT	283
1284620GT	285
1284621GT	285
1284622GT	283
1284623GT	283
1284624GT	283
1284625GT	283
1284626GT	283
1284627GT	283
1284628GT	287
1284629GT	287
1284630GT	283
1284631GT	289
1284632GT	289
1284633GT	285
1284634GT	291
1284635GT	287
1284636GT	287
1284637GT	287
1284638GT	287
1284639GT	287
1284641GT	287
1284642GT	287
1284643GT	287
1284644GT	287
1284645GT	287
1284646GT	287
1284647GT	289
1284648GT	289
1284649GT	287
1284650GT	289
1284651GT	289
1284652GT	289
1284653GT	289
1284654GT	289
1284655GT	289
1284656GT	289
1284657GT	289
1284658GT	289
1284659GT	289
1284660GT	289
1284661GT	289
1284662GT	289
1284663GT	289
1284664GT	289
1284665GT	289
1284666GT	285
1284667GT	285
1284669GT	291
1284670GT	291
1284671GT	291
1284724GT	119, 233
1284757GT	119, 233
1284785GT	285
1284786GT	283
1284973GT	483
1284974GT	481
1284975GT	481
1284977GT	483
1284981GT	19, 23
1284982GT	45, 49
1285141GT	411
1285142GT	411
1285143GT	411
1285144GT	411
1285145GT	411
1285146GT	411
1285147GT	411
1285150GT	457
1285151GT	457
1285152GT	457
1285153GT	457
1285263GT	317
1285264GT	313
1285265GT	313
1285266GT	321
1285267GT	319
1285268GT	315
1285269GT	313
1285270GT	313
1285406GT	313
1285480GT	313
1285481GT	313
1285603GT	313
1285623GT	397
1285632GT	313
1285700GT	451
1285868GT	477
1285869GT	477
1286137GT	267
1286171GT	359
1286204GT	317
1286205GT	317
1286206GT	319
1286362GT	45, 49, 55
1286371GT	67
1286372GT	65

Part no.	Page Number
1286507GT	67
1286546GT	323
1286602GT	75
1286637GT	17, 43
1286638GT	21, 47
1286640GT	111
1286642GT	349
1287081GT	463, 471
1287140GT	315, 317
1287434GT	393
1287750GT	317
1287879GT	321
1288009GT	327
1288010GT	327
1288011GT	327
1288012GT	327
1288013GT	329
1288215GT	323
1288285GT	347
1288358GT	107, 109
1288386GT	357
1288795GT	111
1288838GT	31, 57
1288839GT	25, 51
1288840GT	33, 59
1288841GT	27, 53
1288842GT	25, 51
1288843GT	33, 59
1288844GT	27, 53
1288845GT	35
1288846GT	39
1288847GT	61
1288848GT	63
1288849GT	35, 39
1288850GT	61, 63
1288851GT	33, 59
1288852GT	27, 53
1288853GT	25, 51
1288854GT	25, 27
1288855GT	25, 51
1288856GT	31, 57
1289014GT	31, 57
1289103GT	259
1289520GT	77, 81, 507
1289521GT	77, 81, 507
1289522GT	507
1289523GT	507
1289536GT	505
1289552GT	371, 375
1289554GT	463
1289561GT	77, 81, 507
1289823GT	505
1289837GT	505
1289852GT	505
1289890GT	317
1290107GT	505
1290459GT	107
1290460GT	109
1290501GT	119, 129, 233
1290849GT	119, 139, 233, 505
1290919GT	323
1290920GT	321
1290921GT	321
1290922GT	323
1290925GT	159, 163
1290926GT	161, 163, 241
1290927GT	241
1290930GT	119, 161, 233
1291205GT	325
1291206GT	325
1291207GT	325
1291208GT	325
1291210GT	325
1291404GT	313
1291495GT	433
1291496GT	433
1291573GT	505
1291798GT	509
1291799GT	509
1291800GT	509
1291801GT	511
1291802GT	509, 513
1291803GT	511, 515
1291804GT	511, 513
1291806GT	511, 515
1291807GT	511
1291809GT	511, 515
1291811GT	509, 513
1291812GT	509, 513
1291813GT	511, 515
1291815GT	509, 513
1291817GT	509, 513
1291818GT	511, 515
1291819GT	511, 513
1291821GT	511, 515
1291844GT	511, 513
1291865GT	509, 513
1292180GT	121, 227, 235
1292198GT	507
1292346GT	121, 223, 235
1292828GT	511, 515
1292932GT	509, 513
1292936GT	509
1292937GT	509
1292937PGT	509
1292956GT	509
1293700GT	513
1293702GT	513
1293703GT	513
1293704GT	515
1293706GT	511, 513
1293710GT	513
1294251GT	313
1294289GT	121, 225, 235
1294296GT	317
1296206GT	121
1296207GT	235
1296591GT	457
1296895GT	519
1296897GT	519
1297339GT	325
1297340GT	325
1297341GT	325
1297342GT	325
1297343GT	325
1297344GT	325

Part no.	Page Number
1297345GT	325
1297346GT	325
1297348GT	325
1297349GT	325
1297350GT	325
1297351GT	325
1298746GT	75
1298765GT	309
1298841GT	449
1298850GT	449
1300827GT	75
1300832GT	519
1302644GT	17, 21
1302645GT	17, 21
1302646GT	35, 39
1302647GT	35, 39
1302648GT	43, 47
1302649GT	43, 47
1302650GT	43, 47, 61, 63
1302651GT	61, 63
1302966GT	111
1303389GT	403
1303390GT	401
1303581GT	89
1303998GT	347
1303999GT	347
1304000GT	343
1304001GT	343
1306209GT	119, 193, 235
1306210GT	379
1306211GT	167, 233
1306212GT	119, 135, 233
1306377GT	13, 357, 363
1306378GT	353
1306608GT	119, 165, 233
1306899GT	499
1306900GT	499
1307644GT	499
1307645GT	499
1307726GT	353, 355, 359
1307739GT	499
1308384GT	499
1309207GT	125, 233
1310064GT	499
1310066GT	499
1310252GT	125, 133
1310378GT	471
1310379GT	483
1310738GT	353, 357, 363
1310739GT	353
1310898GT	517
1310910-975GT	517
1310911-950GT	517
1310986GT	71
1311010GT	65
1311043GT	483
1311054GT	471
1311457GT	357, 359
1311624GT	55
1312118	407
1312271GT	465
1312547GT	467
1312740GT	405
1312876GT	243
1312877GT	243
1312880GT	241
1312881GT	241
1312883GT	241
1312884GT	233
1312900GT	85
1313118GT	517
1313592GT	77, 81, 507
1314181GT	401, 403
1314182GT	401, 403
1314183GT	401, 403
1314554GT	401, 403
1314555GT	401, 403
1314556GT	401, 403
1315824GT	99
1316635GT	79
1317967GT	77, 81
1319559GT	335
1321041GT	337
1321271GT	337
1322474GT	27
1322810GT	449
1323139GT	337
1323444GT	265
1323761GT	383, 389
T106954GT	105
T106955GT	105
T106957GT	105
T106961GT	105
T106962GT	105
T109692GT	481
T109693GT	481
T110954GT	139, 159, 161, 247
T110955GT	139, 159, 161, 247
T111507GT	75
T112536GT	139, 159, 161, 247
T112537GT	139, 159, 161
T112560GT	481
T112561GT	481
T112626GT	391
T112773GT	37, 41, 61, 63
T115763GT	327
T115764GT	327
T115766GT	373, 377

Notes

California Proposition 65

WARNING

Operating, servicing and maintaining this equipment, passenger vehicle or off-highway motor vehicle can expose you to chemicals including engine exhaust, carbon monoxide, phthalates, and lead, which are known to the State of California to cause cancer and birth defects or other reproductive harm. These chemicals can be emitted from or contained in other various parts and systems, fluids and some component wear by-products. To minimize exposure, avoid breathing exhaust, do not idle the engine except as necessary, service your equipment and vehicle in a well-ventilated area and wear gloves or wash your hands frequently when servicing your equipment or vehicle and after operation. For more information go to www.P65Warnings.ca.gov/passenger-vehicle.

Breathing diesel engine exhaust exposes you to chemicals known to the State of California to cause cancer and birth defects or other reproductive harm.

- Always start and operate the engine in a well-ventilated area.
- If in an enclosed area, vent the exhaust to the outside.
- Do not modify or tamper with the exhaust system.
- Do not idle the engine except as necessary.

For more information go to www.P65warnings.ca.gov/diesel.

Distributed By: